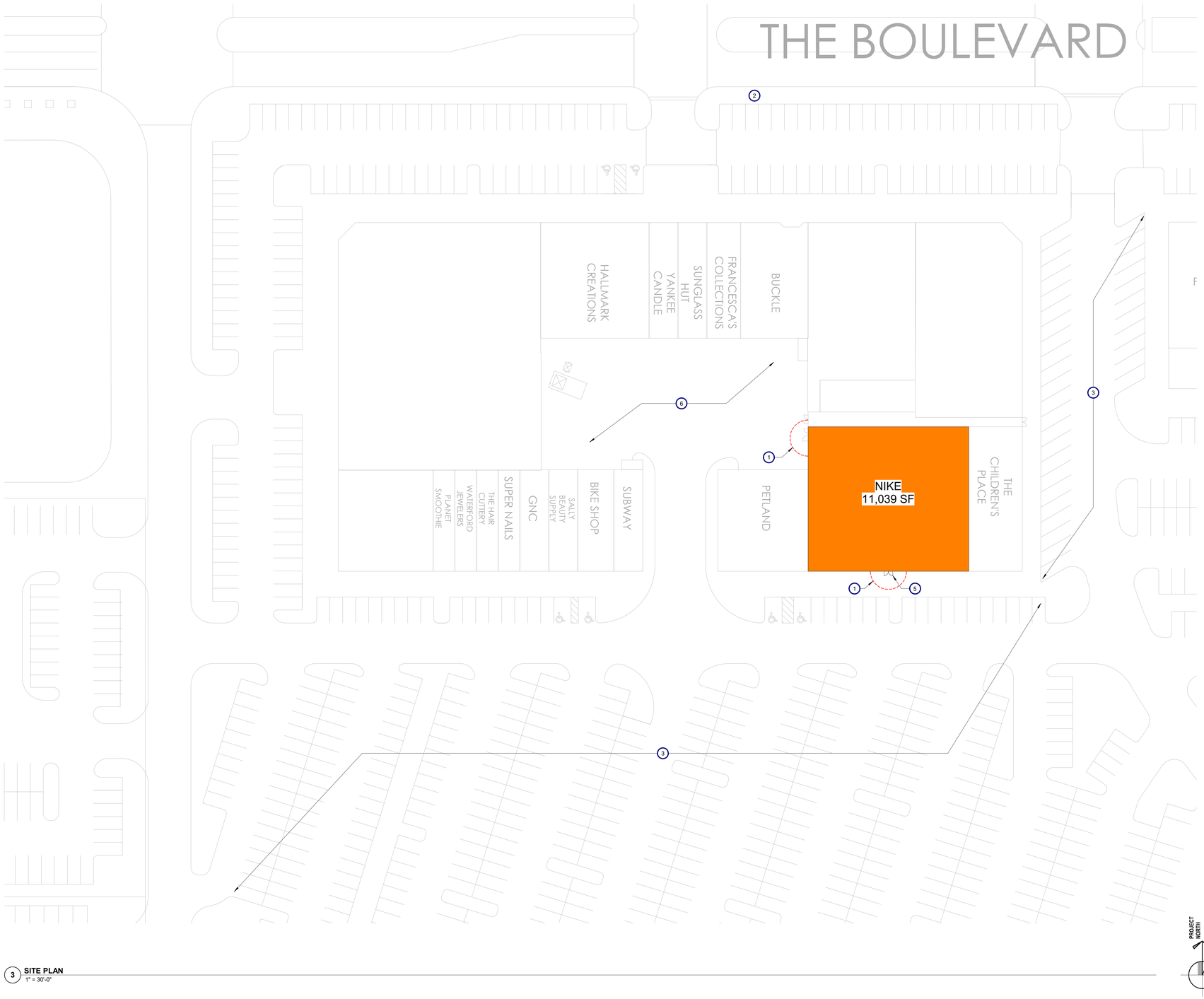

3 **SITE PLAN**
1" = 30'-0"

SHEET NOTES

A. TENANT CONTRACTOR TO COORDINATE WITH LANDLORD FOR PRODUCT SPECIFICATION APPROVAL PRIOR TO INSTALLATION OF THE NON-SMOKING SIGN.

B. TENANT CONTRACTOR SHALL COORDINATE WORK WITH LANDLORD AND ENSURE MINIMAL DISRUPTION TO CENTER OPERATION AND ADJACENT TENANTS.

C. TENANT CONTRACTOR SHALL COMPLY WITH CENTER DESIGN STANDARD FOR ANY EXTERIOR COMPONENT.

KEYNOTES

1. NON-SMOKING ZONE 25' RADIUS FROM DOOR. INSTALL NON-SMOKING SIGN BESIDE ENTRY DOOR MTD AT 5' - 0" A.F.F. SEE DETAIL 1/A0.0
2. EXISTING PUBLIC TRANSPORTATION ACCESS
3. EXISTING MALL PARKING BY LANDLORD
4. NOT USED
5. STORE ENTRANCE. TENANT CONTRACTOR NOTIFY ARCHITECT IF ANY DISCREPANCY EXISTS.
6. EXISTING LOADING AREA.

PER LEED REQUIREMENT, THERE SHALL NOT BE SMOKING ALLOWED WITHIN 25 FT FROM ENTRY. TENANT CONTRACTOR TO INSTALL NO SMOKING SIGNS AT FRONT AND REAR EXTERIOR ENTRY DOOR. - SIGN WILL BE WALL MOUNTED AT 5' A.F.F. TO CENTER

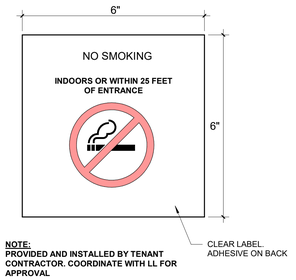

NOTE:
PROVIDED AND INSTALLED BY TENANT CONTRACTOR. COORDINATE WITH LL FOR APPROVAL

1 **NO SMOKING SIGN DETAIL**
1 1/2" = 1'-0"

Architect:

brr

ARCHITECT OF RECORD:
BRR ARCHITECTURE, INC
8131 METCALF AVE
SUITE 300
OVERLAND PARK, KS 66204

www.brrarch.com

TEL: 913-262-9095
FAX: 913-262-9044

COPYRIGHT NOTICE

This drawing was prepared for use on a specific site contemporaneously with its issue date and it is not suitable for use on a different project site or at a later time. Use of this drawing for reference or example on another project requires the services of properly licensed architects and engineers. Reproduction of this drawing for reuse on another project is not authorized and may be contrary to the law.

Engineer:

Project Owner:

NIKE, Inc.
One Bowerman Drive
Beaverton, OR 97005
(503) 671-6453
www.nike.com

Project Address:

NIKE FACTORY STORE
WATERFORD LAKES
SHOPPING CENTER
449 N. ALAFAYA TRAIL
ORLANDO, FL 32828
TEMPLATE ISSUE DATE: 11/28/2018

Fixture Package:
UNITE

Stamp:
NOT FOR CONSTRUCTION
FOR REFERENCE ONLY

Issued For:
PERMIT/BID

Issue Date:
11/06/2020

Revisions:

NO.	REASON	DATE

PROJECT MANAGER:
KH
CHECKED BY:
DRAWN BY:
DB

Project Number:
62301411

Sheet Title:
SITE PLAN

Sheet Number:
A0.0

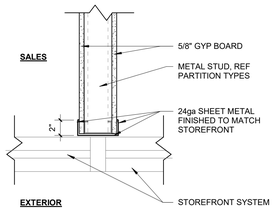

4 **STOREFRONT DETAIL**
1 1/2" = 1'-0"

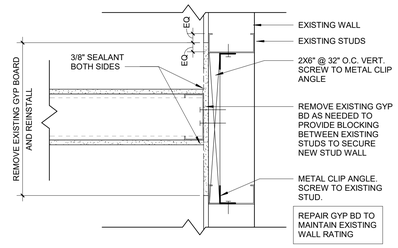

3 **WALL DETAIL**
1 1/2" = 1'-0"

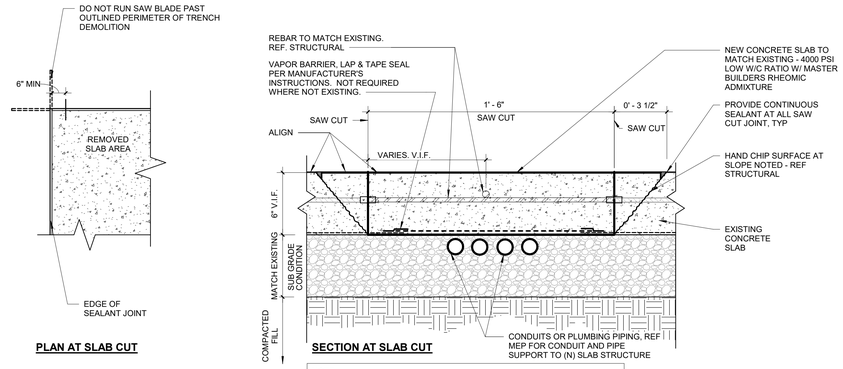

2 **TRENCH DETAIL**
3" = 1'-0"

SHEET NOTES

A. TENANT CONTRACTOR TO ESTABLISH WORK LINES A, B, B1, C AND C1 IF APPLICABLE FOR CONSTRUCTION.

B. ALL NEW AND EXISTING GYPSUM BOARD SURFACES REQUIRING WORK PER FINISH SCHEDULE TO BE MIN. LEVEL 4 FINISH - SMOOTH WALL PRIMED READY FOR FINISHED PAINT.

C. TENANT CONTRACTOR TO PROVIDE CONTROL JOINTS IN ALL NEW WALLS AT 20'-0" INTERVALS MAX. REF DETAIL ON A2.0.

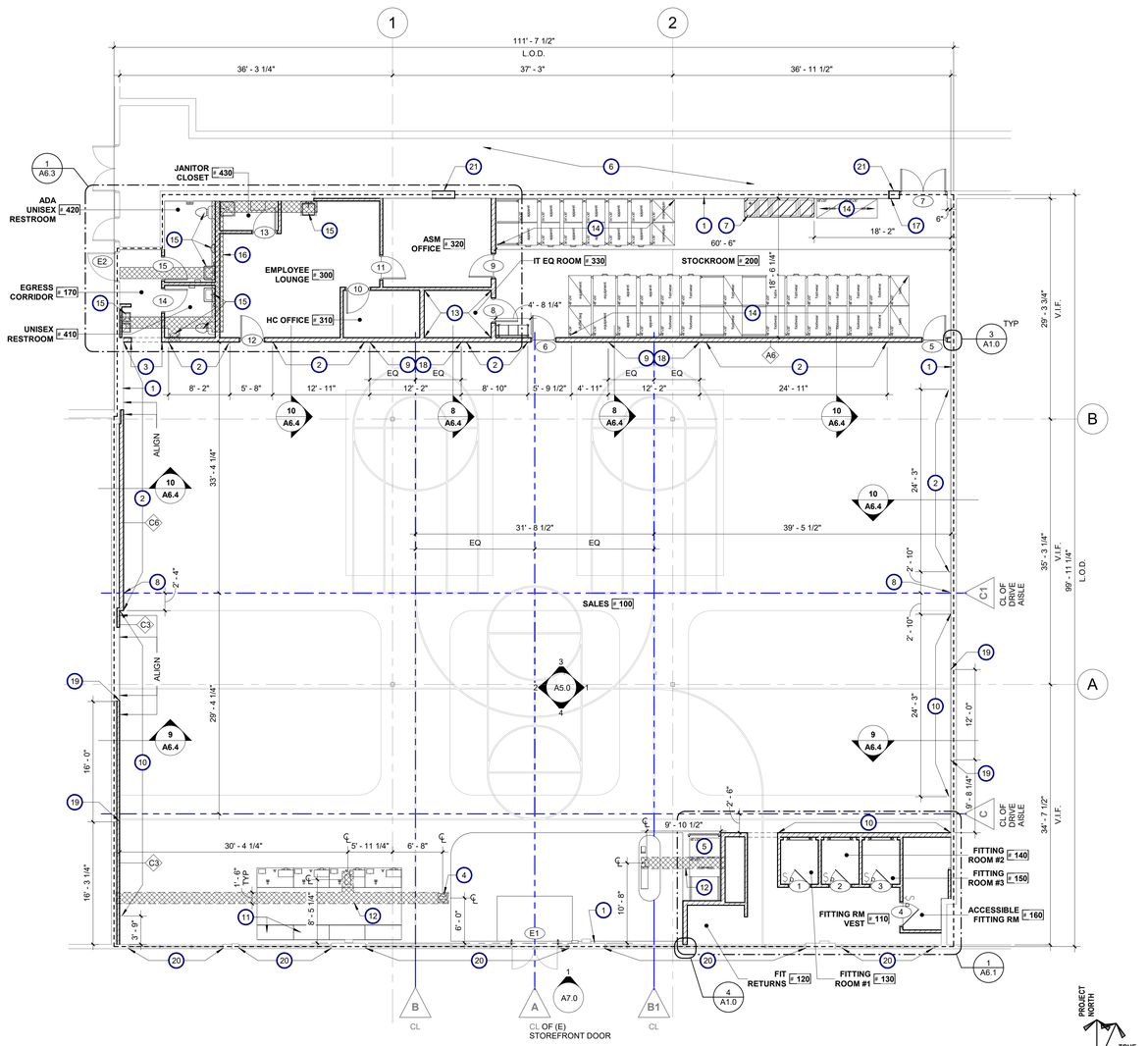

1 **FLOOR PLAN**
1/8" = 1'-0"

LEGEND

- EXISTING DOOR - VERIFY SIZE, FINISH, HARDWARE IN FIELD
- NEW DOORS - SEE DOOR SCHEDULE AND DETAIL ON SHEET A1.2
- EXISTING STOREFRONT SYSTEM
- NEW STOREFRONT SYSTEM
- EXISTING PARTITION WALL
- NEW PARTIAL-HEIGHT PARTITION WALL - SEE PARTITION SCHEDULE ON THIS SHEET AND DETAIL ON SHEET A1.1
- AREA OF CONCRETE TO BE REPLACED AFTER CONDUITS INSTALLED
- OVERHEAD
- LEASE OUTLINE - VERIFY WITH LOD.

KEYNOTES

1. EXISTING FULL HEIGHT PARTITION TO REMAIN AND TO BE RE-FINISHED (IF APPLICABLE) PER SHEET A2.0. PATCH AND REPAIR WALL AS REQUIRED DURING CONSTRUCTION TO MAINTAIN EXISTING FIRE RATINGS.
2. 6" CONT. MTL RUNNER CHANNEL BEHIND GYP. BOARD WHERE NEW WALL MOUNTED FIXTURES OCCUR. PATCH AND REPAIR WALL TO MATCH ADJACENT SURFACE. REF A2.0 FOR NEW FINISHES — SEE DETAIL 4/A6.4
3. 2" x 2"x 4'-0" BRUSHED S.S. CORNER GUARDS WITH CLEAR CAULKING. BURNS MANUFACTURING INC. (814) 833-7428
4. POWER/DATA FLOOR BOX LOCATIONS, REF ELECTRICAL
5. OPEN TO MINIATURE RACK
6. NOT WORKSCOPE IN THIS AREA.
7. ELECTRICAL PANELS & EQUIPMENT. SEE ELECTRICAL DRAWING FOR ANY MODIFICATION SCOPE.
8. INSTALL POWER AND DATA OUTPUTS. CENTER THE OUTPUTS WITH CONSTRUCTION LINE AND 6" AWAY FROM EACH OTHER. SEE ELECTRICAL DRAWING AND ELEVATION FOR MORE INFORMATION.
9. PROVIDE POWER AND DATA OUTLETS PER THE ELECTRICAL PLANS BEHIND THE FOOTWEAR INITIATIVE WALL. SEE A5.0 SALES ELEVATIONS AND ELECTRICAL DRAWING FOR MORE INFORMATION.
10. 8" CONT. MTL RUNNER CHANNEL BEHIND GYP. BOARD WHERE NEW WALL MOUNTED FIXTURES OCCUR. PATCH AND REPAIR WALL TO MATCH ADJACENT SURFACE. SEE DETAIL 15/A6.4
11. POWER FOR FUTURE MOBILE POS CHARGING STATION IN BACKWRAP FIXTURES.
12. TRENCH EXISTING CONCRETE AS REQ'D FOR NEW POWER/DATA CONDUIT. OVERCUTTING IS NOT PERMITTED. PROVIDE 4,000 PSI CONCRETE POUR BACK AFTER WORK IS COMPLETE. FINISH TO MATCH ADJACENT SLAB. CONTINUE EXISTING CONTROL JOINTS THROUGH NEW CONCRETE POUR, FILL CONTROL JOINTS WITH ELASTOMERIC SEALANT. ALL UNDERSLAB WORK MUST BE COORDINATED WITH ON-SITE TENANT COORDINATOR. SEE DETAIL 2/A1.0
13. IT EQUIPMENT. CONNECT TO TYCO EQUIPMENT AND SECURITY DEVICES. PROVIDE 3/4" FRT PLYWOOD SHEATHING ACROSS ALL WALLS OF ROOM. SEE ELECTRICAL DRAWING
14. NEW PIPP MOBILE SHELVING. TENANT CONTRACTOR TO COORDINATE WITH NIKE VENDOR FOR INSTALLATION.
15. NEW PLUMBING FIXTURE. SEE PLUMBING DRAWING FOR MORE INFORMATION.
16. TRENCH EXISTING CONCRETE AS REQ'D FOR NEW PLUMBING SANITARY LINE INSTALLATION FROM EXISTING SANITARY MAIN STUB UP. OVERCUTTING IS NOT PERMITTED. TENANT CONTRACTOR TO VERIFY EXISTING STUB UP LOCATION IN FIELD. PROVIDE 4,000 PSI CONCRETE POUR BACK AFTER WORK IS COMPLETE. FINISH TO MATCH ADJACENT SLAB. CONTINUE EXISTING CONTROL JOINTS THROUGH NEW CONCRETE POUR, FILL CONTROL JOINTS WITH ELASTOMERIC SEALANT. ALL UNDERSLAB WORK MUST BE COORDINATED WITH ON-SITE TENANT COORDINATOR. SEE DETAIL 2/A1.0
17. REF PLUMBING DRAWINGS FOR WATER SHUT-OFF VALVE LOCATION. PROVIDE SIGN INDICATING LOCATION FOR STORE TEAM'S USE.
18. 8" CONT. MTL RUNNER CHANNEL BEHIND GYP. BOARD WHERE NEW FOOTWEAR INITIATIVE OCCURS. SEE DETAIL 15/A6.4
19. INSTALL POWER OUTPUTS @ 18" A.F.F., TYP. SEE ELECTRICAL DRAWING AND ELEVATION FOR MORE INFORMATION.
20. VENDOR TO PROVIDE AND INSTALL DEFENSELITE WINDOW SYSTEM AT STOREFRONT. VENDOR TO VERIFY CONDITION OF STOREFRONT PRIOR TO INSTALL.
21. TENANT CONTRACTOR TO INFILL WALL TO MATCH EXISTING FIRE RATING, MATERIALS AND FINISHES

Architect:

brr

ARCHITECT OF RECORD:
BRR ARCHITECTURE, INC
8131 METCALF AVE
SUITE 300
OVERLAND PARK, KS 66204

www.brrarch.com

TEL: 913-262-9095
FAX: 913-262-9044

COPYRIGHT NOTICE

This drawing was prepared for use on a specific site contemporaneously with its issue date and it is not suitable for use on a different project site or at a later time. Use of this drawing for construction on another project requires the services of properly licensed architects and engineers. Reproduction of this drawing for reuse on another project is not authorized and may be contrary to the law.

Engineer:

Project Owner:

NIKE, Inc.
One Bowerman Drive
Beaverton, OR 97005
(503) 671-6453
www.nike.com

Project Address:

NIKE FACTORY STORE
WATERFORD LAKES
SHOPPING CENTER
449 N. ALAFAYA TRAIL
ORLANDO, FL 32828
TEMPLATE ISSUE DATE: 11/28/2018

Fixture Package:

UNITE

Stamp:

NOT FOR CONSTRUCTION

Issued For:

PERMIT/BID

Issue Date:

11/06/2020

Revisions:

NO.	REASON	DATE

PROJECT MANAGER: KH
CHECKED BY:
DRAWN BY: RAN

Project Number:

62301411

Sheet Title:

FLOOR PLAN

Sheet Number:

A1.0

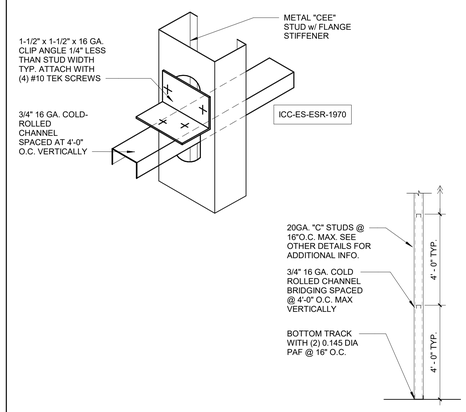

NOTES:

1. THE MATERIALS AND DETAILS SHOWN ARE FOR TYPICAL INSTALLATIONS. WHERE THE STUD MANUFACTURER'S RECOMMENDATIONS OR LOCAL ORDINANCES ARE MORE RESTRICTIVE, THEY SHALL APPLY.

2. TYPICAL FASTENER:

STEEL STUDS TO STEEL STUDS OR TRACKS:
#8-18 x 1/2" TEKS/2 WITH PHIL. PAN HEAD FOR 25GA. OR 20GA. #10-16 x 9/16" TEKS/3 WITH PHIL. PAN HEAD FOR INTERCONNECTION OF 18GA. OR 16 GA.

STEEL STUDS OR TRACKS TO WOOD PURLINS, GIRDERS AND BEAMS:
#14-1 Ox 1/2" H.W.H. TYPE "S" METAL-TO-WOOD TEKS. STEEL

STUDS OR TRACKS TO STRUCTURAL STEEL (TUBE STEEL, WIDE FLANGE BEAMS, COLUMNS, GIRDERS, ETC.):
TEKS/3 OR TEKS/4- GAUGE AND LENGTH AS REQUIRED FOR THE COMBINED THICKNESS OF THE MATERIAL TO BE DRILLED.

PLYWOOD TO STEEL STUDS:
#10-24 x 3/4" TEKS/3
(PLYMETALTEKS) WITH THIN WAFER HEAD.

GYP. BD. TO STEEL STUDS:
#7 x 1l A" HI-LO TYPE
"S" BUGLE HEAD SCREWS FOR 3/8" TO 5/8" GYP. BD. TO 25GA. OR 20GA.
STUDS. #6 x 1 /4" TYPE "S-12" BUGLE HEAD SCREWS FOR 3/8" TO 5/8" GYP. BD. TO 18GA. OR 16GA. STUDS OR TRACKS.

10 STUD BRACING
1/2" = 1'-0"

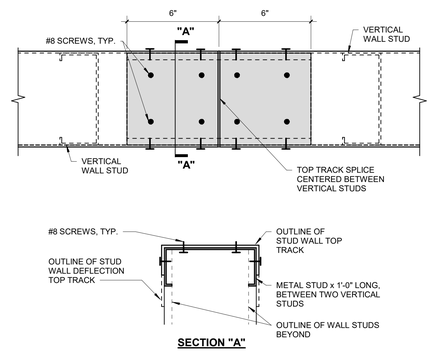

9 TOP TRACK SPLICE
3" = 1'-0"

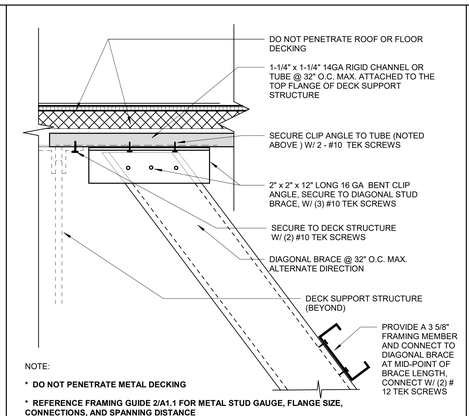

NOTE:

* **DO NOT PENETRATE METAL DECKING**
* **REFERENCE FRAMING GUIDE 2/A1.1 FOR METAL STUD GAUGE, FLANGE SIZE, CONNECTIONS, AND SPANNING DISTANCE**

8 WALL BRACING ATTACHMENT PARALLEL TO TRUSSES
3" = 1'-0"

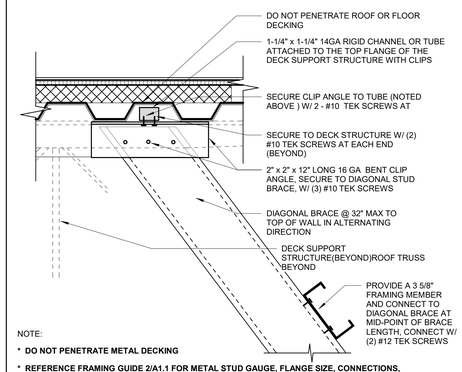

NOTE:

* **DO NOT PENETRATE METAL DECKING**
* **REFERENCE FRAMING GUIDE 2/A1.1 FOR METAL STUD GAUGE, FLANGE SIZE, CONNECTIONS, AND SPANNING DISTANCE**

7 WALL BRACING ATTACHMENT PERPENDICULAR TO TRUSSES
3" = 1'-0"

REFERENCE FRAMING GUIDE 2/A1.1 FOR METAL STUD GAUGE, FLANGE SIZE, CONNECTIONS, AND SPANNING DISTANCE

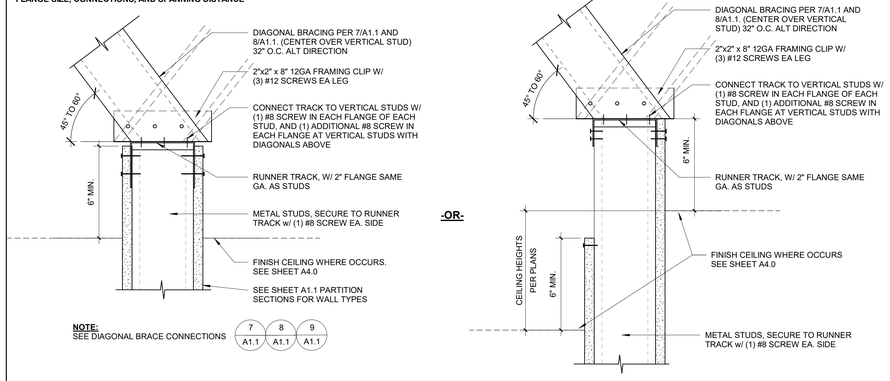

NOTE:
SEE DIAGONAL BRACE CONNECTIONS 7 A1.1 8 A1.1 9 A1.1

6 PARTIAL HEIGHT WALL HEADER BRACING
3" = 1'-0"

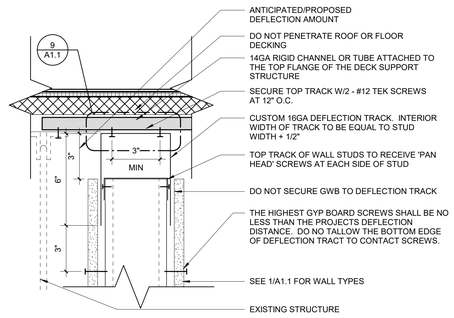

5 FULL HEIGHT WALL HEADER PARALLEL TO TRUSSES
3" = 1'-0"

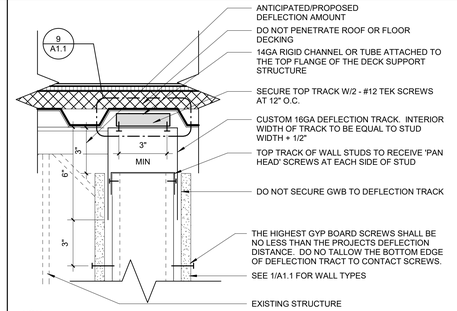

NOTE:

* **DO NOT PENETRATE METAL ROOF DECK**
* **DEFLECTION AMOUNT MUST BE ADJUSTED BASED ON ROOF DECK LOADS, SNOW, ETC. AT TIME OF INSTALL AND SITE LOCATION.**
* **REFERENCE FRAMING GUIDE 2/A1.1 FOR METAL STUD GAUGE, FLANGE SIZE, CONNECTIONS, AND SPANNING DISTANCE**

4 FULL HEIGHT WALL HEADER PERPENDICULAR TO TRUSSES
3" = 1'-0"

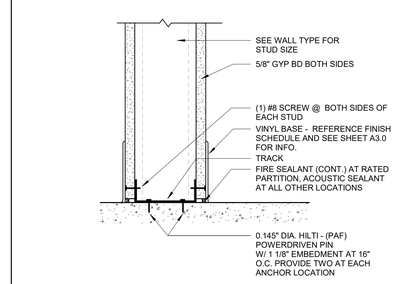

REFERENCE FRAMING GUIDE 2/A1.1 FOR METAL STUD GAUGE, FLANGE SIZE, CONNECTIONS, AND SPANNING DISTANCE

3 WALL BASE
3" = 1'-0"

DIAGONAL BRACING AND STUD SIZE OPTIONS PER SEISMIC ZONES A, B, & C

SEISMIC DESIGN CATEGORIES A, B, and C

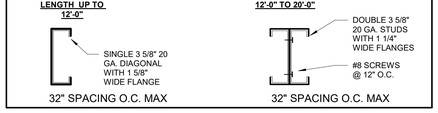

*CONTACT STRUCTURAL ENGINEER IF DIAGONAL LENGTH EXCEEDS 20'-0"

STUD SIZE MATRIX FOR ALL INTERIOR PARTITIONS
SEISMIC DESIGN CATEGORIES A, B, and C

STUD DESIGNATION	STUD DEPTH	FLANGE WIDTH	STUD GAUGE	STUD SPACING	MAXIMUM WALL HEIGHT SPANNING FROM FLOOR TO DECK
362S125-30	3 5/8"	1 1/4"	DW20	16"	15' - 0"
600S125-30	6"	1 1/4"	DW20	16"	22' - 0"

NOTES:
1. DESIGN BASED ON ALLOWABLE DEFLECTION OF L/240.
2. DESIGN BASED ON Fy = 33 KSI FOR 3 5/8" & 6" STUDS LESS THAN 16 GAUGE.
   Fy = 50 KSI FOR 3 5/8", 16 GAUGE.
3. PROVIDE HORIZONTAL BRIDGING PER DETAIL 10/A1.1
4. DESIGN BASED ON MINIMUM 5 PSF LATERAL LOAD, OR LATERAL SEISMIC LOAD, WHICHEVER CONTROLS.
5. TABLE IS VALID FOR UP TO (2) LAYERS OF 5/8" THICK GYPSUM BOARD ON EACH SIDE OF METAL STUDS.
6. FOR WALL HEIGHT IN EXCESS OF 22' -0" - CONSULT AOR / EOR FOR FRAMING REQUIREMENTS

2 DIAGONAL BRACING PER SEISMIC ZONES A, B, & C
3" = 1'-0"

LEGEND

'?'	STUD SIZE
1	1 5/8" STUDS
2	2 1/2" STUDS
3	3 5/8" STUDS
6	6" STUDS
8	8" STUDS
E	EXISTING WALL

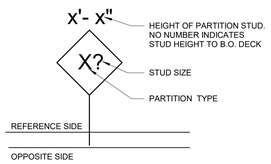

PARTITION TAG

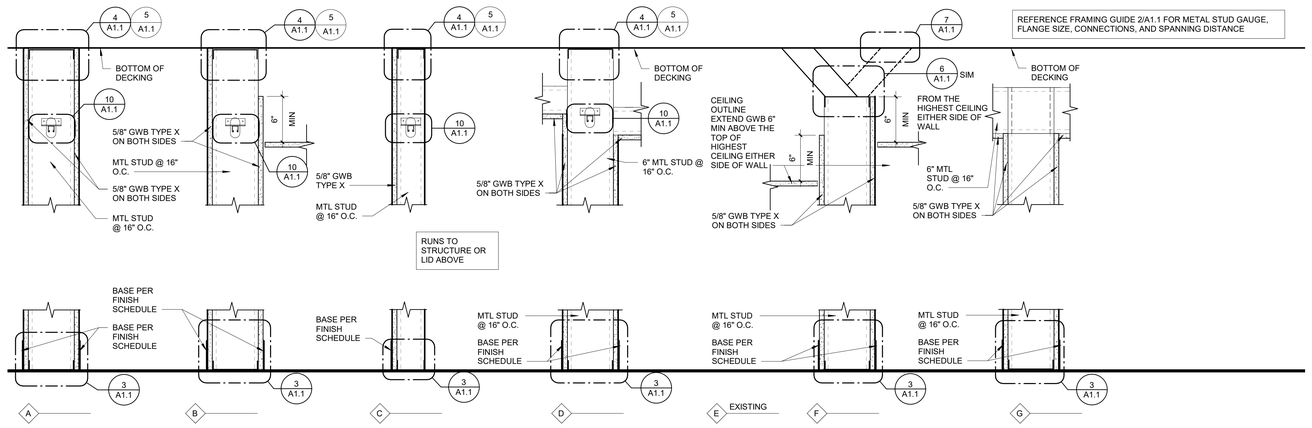

1 PARTITION SECTIONS
1 1/2" = 1'-0"

Architect:

brr

ARCHITECT OF RECORD:
BRR ARCHITECTURE, INC
8131 METCALF AVE
SUITE 300
OVERLAND PARK, KS 66204

www.brrarch.com

TEL: 913-262-9095
FAX: 913-262-9044

COPYRIGHT NOTICE

This drawing was prepared for use on a specific site contemporaneously with its issue date and it is not suitable for use on a different project site or at a later time. Use of this drawing for construction on another project requires the services of properly licensed architects and engineers. Reproduction of this drawing for reuse on another project is not authorized and may be contrary to the law.

Engineer:

Project Owner:

NIKE, Inc.
One Bowerman Drive
Beaverton, OR 97005
(503) 671-6453
www.nike.com

Project Address:

NIKE FACTORY STORE
WATERFORD LAKES
SHOPPING CENTER
449 N. ALAFAYA TRAIL
ORLANDO, FL 32828
TEMPLATE ISSUE DATE: 11/28/2018

Fixture Package:
UNITE

Stamp:
NOT FOR CONSTRUCTION

Issued For:
PERMIT/BID

Issue Date:
11/06/2020

Revisions:

NO.	REASON	DATE

PROJECT MANAGER: KH
CHECKED BY:
DRAWN BY: RAN

Project Number:
62301411

Sheet Title:
PARTITION DETAILS & SEISMIC REQUIREMENTS

Sheet Number:
A1.1

DOOR SCHEDULE

DOOR #	SPACE	TYPE	WIDTH NOMINAL	HEIGHT NOMINAL	THICK	PANEL MATERIAL	FRAME MATERIAL	HARDWARE LOCKSET	HARDWARE HINGE	HARDWARE PLATES PULL	HARDWARE PLATES PUSH	HARDWARE PLATES KICK	HARDWARE STOP/HOLDER	HARDWARE CLOSER	HARDWARE SILENCER	FIRE RATING	DETAILS HEAD/JAMB	DETAILS THRESH.	REMARKS
1	FITTING ROOM #1	J	2' - 8"	7' - 6"	1 3/4"	FACTORY	FACTORY	BY FITTING ROOM DOOR VENDOR	BY FITTING ROOM DOOR VENDOR	N/A	N/A	N/A	HAGER 250W US26D	N/A	N/A	-	3/A1.2	N/A	2.1, 2.9
2	FITTING ROOM #2	J	2' - 8"	7' - 6"	1 3/4"	FACTORY	FACTORY	BY FITTING ROOM DOOR VENDOR	BY FITTING ROOM DOOR VENDOR	N/A	N/A	N/A	HAGER 250W US26D	N/A	N/A	-	3/A1.2	N/A	2.1, 2.9
3	FITTING ROOM #3	J	2' - 8"	7' - 6"	1 3/4"	FACTORY	FACTORY	BY FITTING ROOM DOOR VENDOR	BY FITTING ROOM DOOR VENDOR	N/A	N/A	N/A	HAGER 250W US26D	N/A	N/A	-	3/A1.2	N/A	2.1, 2.9
4	ADA FITTING ROOM	I	3' - 0"	7' - 6"	1 3/4"	FACTORY	FACTORY	BY FITTING ROOM DOOR VENDOR	BY FITTING ROOM DOOR VENDOR	N/A	N/A	BY FITTING ROOM DOOR VENDOR	IVES FS438	N/A	N/A	-	3/A1.2	N/A	2.1, 2.9
5	SALES TO STOCKROOM	D	3' - 0"	7' - 0"	1 3/4"	HM	MTL	US26D TRILOGY DL2700 W/ BEST-7 PIN CYLINDER	HAGER#1279, BALL BEARING, 26 FINISH	N/A	N/A	BROOKLINE 10" HIGH STAINLESS STEEL	IVES FS438	LCN-4040XP	IVES SR64	-	2/A1.2	N/A	
6	SALES TO STOCKROOM	D	3' - 0"	7' - 0"	1 3/4"	HM	MTL	US26D TRILOGY DL2700 W/ BEST-7 PIN CYLINDER	HAGER#1279, BALL BEARING, 26 FINISH	N/A	N/A	BROOKLINE 10" HIGH STAINLESS STEEL	IVES FS438	LCN-4040XP	IVES SR64	-	2/A1.2	N/A	
7	RECEIVING DOOR	B	PR 3' -'0"	7' - 0"	1 3/4"	HM	MTL	BEST 1E74 C181 R810 626/MX8 KEY AND CORE	HAGER#1279, BALL BEARING, 26 FINISH	N/A	N/A	BROOKLINE 24" HIGH STAINLESS STEEL	IVES FS452	LCN-4040XP	IVES SR64	1 HR	2/A1.2	N/A	1.2, 1.3, 1.5, 1.10, 1.11,1.13, 2.8
8	STOCKROOM TO IT EQ ROOM	F	3' - 0"	7' - 0"	1 3/4"	HM	MTL	BEST 93K7D15D-S3-626	HAGER#1279, BALL BEARING, 26 FINISH	N/A	N/A	N/A	IVES FS452	N/A	IVES SR64	-	2/A1.2	N/A	2.10
9	STOCKROOM TO ASM OFFICE	D	3' - 0"	7' - 0"	1 3/4"	HM	MTL	BEST 93K7D15D-S3-626	HAGER#1279, BALL BEARING, 26 FINISH	N/A	N/A	BROOKLINE 10" HIGH STAINLESS STEEL	IVES FS38	LCN-4040XP	IVES SR64	-	2/A1.2	N/A	2.8
10	EMPLOYEE LOUNGE TO HC OFFICE	D	3' - 0"	7' - 0"	1 3/4"	HM	MTL	BEST 93K7D15D-S3-626	HAGER#1279, BALL BEARING, 26 FINISH	N/A	N/A	BROOKLINE 10" HIGH STAINLESS STEEL	IVES FS452	LCN-4040XP	IVES SR64	-	2/A1.2	N/A	2.3, 2.8
11	EMPLOYEE LOUNGE TO ASM OFFICE	D	3' - 0"	7' - 0"	1 3/4"	HM	MTL	BEST 93K7D15D-S3-626	HAGER#1279, BALL BEARING, 26 FINISH	N/A	N/A	BROOKLINE 10" HIGH STAINLESS STEEL	IVES FS38	LCN-4040XP	IVES SR64	-	2/A1.2	N/A	2.3, 2.8
12	SALES TO EMPLOYEE LOUNGE	D	3' - 0"	7' - 0"	1 3/4"	HM	MTL	US26D TRILOGY DL2700 W/ BEST-7 PIN CYLINDER	HAGER#1279, BALL BEARING, 26 FINISH	N/A	N/A	BROOKLINE 10" HIGH STAINLESS STEEL	IVES FS438	LCN-4040XP	IVES SR64	-	2/A1.2	N/A	2.3, 2.8
13	EMPLOYEE LOUNGE TO JANITOR CLOSET	E	3' - 0"	7' - 0"	1 3/4"	HM	MTL	BEST 93K7D15D-S3-626	HAGER#1279, BALL BEARING, 26 FINISH	N/A	N/A	BROOKLINE 10" HIGH STAINLESS STEEL	IVES FS452	LCN-4040XP	IVES SR64	-	2/A1.2	N/A	2.3
14	EGRESS CORRIDOR TO RESTROOM	C	3' - 0"	7' - 0"	1 3/4"	HM	MTL	US26D TRILOGY DL2700 W/ BEST-7 PIN CYLINDER, SCHLAGE B571 SATIN CHROME RESTROOM INDICATOR DEADBOLT. MOUNT ABOVE TRILOGY HARDWARE	HAGER#1279, BALL BEARING, 26 FINISH	N/A	N/A	BROOKLINE 10" HIGH STAINLESS STEEL	IVES FS438	LCN-4040XP	IVES SR64	-	2/A1.2	N/A	2.5, 2.6
15	EGRESS CORRIDOR TO ADA RESTROOM	C	3' - 0"	7' - 0"	1 3/4"	HM	MTL	US26D TRILOGY DL2700 W/ BEST-7 PIN CYLINDER, SCHLAGE B571 SATIN CHROME RESTROOM INDICATOR DEADBOLT. MOUNT ABOVE TRILOGY HARDWARE	HAGER#1279, BALL BEARING, 26 FINISH	N/A	N/A	(EX) BROOKLINE 10" HIGH STAINLESS STEEL	IVES FS438	LCN-4040XP	IVES SR64	-	2/A1.2	N/A	2.5, 2.6
E1	ENTRY STOREFRONT	A2	PR 3' -'0"	7' - 0"	2"	(EX) GLASS	(EX) FACTORY	(EX) BEST 1E74 C181 R810 626/MX8 KEY AND CORE	(EX) CONTINUOUS GEARED HINGE	(EX) INTERNATIONAL OFFSET PULL & DBL BEND PUSH BAR PP-2000, 3.25" OFFSET, PROJECT 3.25", DOOR CLR 2.25" CTC 9" BAR @ 2.25" WITH 1.25" DOOR CLR CTC 33-1/16". MOUNTING HDWR: BACK TO BACK AT BOTTOM OF PULL.	N/A	N/A	N/A	(EX) CONCEALED OVERHEAD HEAVY-DUTY CLOSER	(EX) IVES SR64	-	BY LANDLORD	BY LANDLORD	1.1, 1.6, 1.8, 1.9, 1.11
E2	REAR EGRESS	G	3' - 8"	7' - 0"	1 3/4"	(EX) HM	(EX) MTL	(EX) BEST 1E74 C181 R810 626/MX8 KEY AND CORE	(EX) HAGER #1279, BALL BEARING, 26 FINISH	N/A	N/A	(EX) BROOKLINE 10" HIGH STAINLESS STEEL	N/A	N/A	N/A	-	BY LANDLORD	BY LANDLORD	1.2, 1.8, 1.9, 1.11, 1.13

GENERAL NOTES:

1. **'E' SIGNIFIES EXISTING DOOR. TENANT CONTRACTOR TO FIELD VERIFY DOOR TYPE, DIMENSION, HARDWARE, AND FINISH (1) WEEK BEFORE CONSTRUCTION START. NOTIFY ARCHITECT IMMEDIATELY IF THERE IS ANY EXISTING FIELD CONDITION THAT WILL CAUSE CONFLICT AND DESIGN CHANGE TO THE PROPOSED LAYOUT.**
2. **ALL DOORS AND DOOR FRAMES TO BE SEMI-GLOSS. COLOR TO MATCH ADJACENT WALL COLOR.**
3. **PROVIDE STEEL PRODUCTS WHERE POSSIBLE DUE TO HIGH RECYCLED CONTENT.**

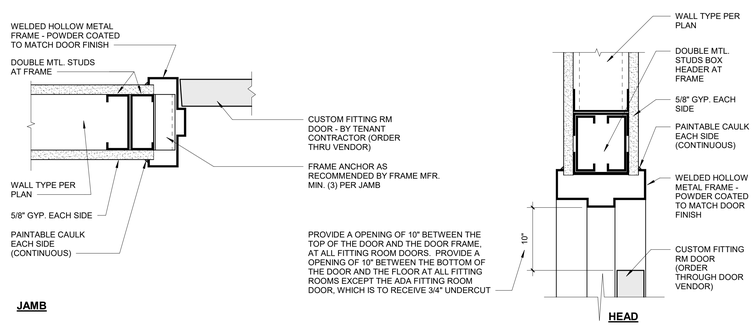

3 **FITTING ROOM DOOR JAMB & HEAD**
3" = 1'-0"

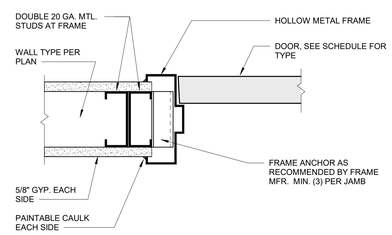

2 **DOOR JAMB**
3" = 1'-0"

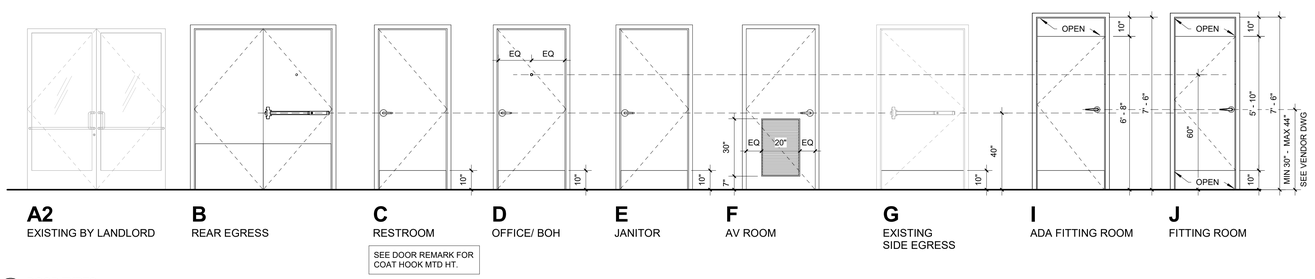

1 **DOOR TYPES**
3/8" = 1'-0"

SHEET NOTES

1. ALL DOORS, FRAMES, & HARDWARE FURNISHED & INSTALLED BY TENANT CONTRACTOR U.N.O.
2. ALL LOCKS SHALL BE FURNISHED WITH "BEST" CONSTRUCTION CYLINDERS BY TENANT CONTRACTOR. CONSTRUCTION CYLINDERS BECOME PROPERTY OF NIKE, INC.
3. ALL LOCK HARDWARE SHALL BE APPROVED BY NIKE, INC. LOSS PREVENTION DEPARTMENT PRIOR TO ORDERING HARDWARE.
4. ALL DOORS TO HAVE TAMPER PROOF HINGES.
5. ALL HAND-ACTIVATED DOOR OPENING HARDWARE SHALL BE CENTERED BETWEEN 36" AND 44" ABOVE THE FLOOR; LATCHING AND LOCKING DOORS IN THE PATH OF TRAVEL SHALL BE OPERATED W/ A SINGLE EFFORT BY LEVER-TYPE HARDWARE, PANIC BARS, PUSH-PULL ACTIVATING BARS OR HARDWARE DESIGNED TO PROVIDE PASSAGE W/O THE ABILITY TO GRASP THE OPENING HARDWARE.
6. ALL EMERGENCY EXITS SHALL OPERATE WITHOUT THE USE OF A KEY FROM INSIDE THE BLDG.
7. ALL HOLLOW METAL DOOR FRAMES TO BE WELDED. KNOCK-DOWN FRAMES ARE NOT ACCEPTABLE.
8. MAX. EFFORT TO OPERATE DOORS SHALL NOT EXCEED 8.5 LBS. FOR EXTERIOR DOORS AND 5 LBS. FOR INTERIOR DOORS. SUCH PUSH OR PULL EFFORT SHALL BE APPLIED AT RIGHT ANGLES TO HINGED DOORS AND AT THE CENTER PLANE FOR SLIDING DOORS.
9. ALL ALUMINUM FRAMES SHALL BE FACTORY FINISHED. SUBMIT COLOR SAMPLES TO ARCHITECT FOR APPROVAL PRIOR TO ORDERING.
10. TENANT CONTRACTOR TO PROVIDE ALL HARDWARE, INSTALL BEST LOCKS, NO SUBSTITUTES, FOR A COMPLETE INSTALLATION. ALL STRIKES TO BE DUST-PROOF.
11. EXTERIOR EXIT DOORS TO HAVE BLANK PLUGS TO MATCH ON EXTERIOR SIDE - NO PULLS, LEVERS, OR DOOR KNOBS.
12. FOR DOOR FINISHES, SEE SHEET A1.2 AND A2.0
13. DOORS IN SERIES OR FORMING A VESTIBULE SHALL HAVE MINIMUM VESTIBULE DEPTH OF 48" PLUS THE WIDTH OF THE DOOR LEAF SWINGING INTO THE VESTIBULE
14. DOORS IN SERIES OR FORMING A VESTIBULE MUST SWING THE SAME DIRECTION UNLESS THEY BOTH SWING AWAY FROM THE VESTIBULE AREA.
15. TENANT CONTRACTOR TO SERVICE AND REPAIR ALL EXISTING DOORS AS NECESSARY. TENANT CONTRACTOR TO MATCH EXISTING HARDWARE WHEN REPLACING HARDWARE AS NECESSARY
16. TENANT CONTRACTOR TO VERIFY ALL EXISTING ENTRY, TOILET ROOM, AND EXIT DOORS SHALL MEET REQUIREMENT BY LOCAL AND NATIONAL CODES AND ORDINANCES. LOCATIONS OF SUCH DOORS SHALL BE APPROVED IN ADVANCE BY TENANT'S ARCHITECT.
17. TENANT CONTRACTOR TO VERIFY ALL EXISTING DOORS, OTHER THAN THE ENTRY/STOREFRONT SYSTEM AND THE DOOR LISTED IN ITEM E BELOW SHALL BE A MINIMUM 3'-0" X 7'-0" X 1 3/4" INSULATED HOLLOW METAL DOORS WITH CONTINUOUSLY WELDED SEAMS. EXTERIOR DOORS SHALL HAVE CLOSED TOP AND BOTTOM EDGES INTEGRAL WITH THE DOOR CONSTRUCTION. ALL DOORS SHALL BE PROVIDED WITH WEATHER STRIPPING.
18. TENANT CONTRACTOR TO VERIFY ALL FRAMES AT SERVICE DOORS ONLY SHALL BE 16 GAUGE HOLLOW METAL WITH CONTINUOUSLY WELDED CORNER CONSTRUCTION. FRAMES SHALL HAVE 9 GAUGE STEEL HINGE AND STRIKE REINFORCEMENT PLATES, PROJECTION WELDED, WITH PROVISIONS FOR 4 1/2" X 4 1/2" TEMPLATE -TYPE HINGES.
19. TENANT CONTRACTOR TO VERIFY ENTRY DOOR MATERIALS AND FINISHES SYSTEM SHALL BE BASED ON THE LANDLORD'S MALL STANDARD, IF THERE IS NO STANDARD CONTACT TENANT'S ARCHITECT PRIOR TO ORDERING. EACH DOOR LEAF SHALL BE EQUIPPED WITH TOP AND BOTTOM PIVOTS, CONCEALED OVERHEAD CLOSERS, AND THRESHOLDS AND WEATHER STRIPPING.
20. TENANT CONTRACTOR TO VERIFY ENTRY DOOR MATERIALS AND FINISHES. SYSTEM SHALL BE BASED ON THE LANDLORD'S STANDARD, IF THERE IS NO STANDARD CONTACT TENANT'S ARCHITECT PRIOR TO ORDERING.
21. TENANT CONTRACTOR TO VERIFY ENTRANCE DOORS AND STOREFRONTS SHALL BE A 1" THICK INSULATED LAMINATED GLASS ASSEMBLY CONSISTING OF 1/4" LAMINATED GLASS PANEL, A 1/2" AIR SPACE AND ANOTHER 1/4" LAMINATED GLASS PANEL. THE ASSEMBLY SHALL MEET ALL APPLICABLE CODES AND ENERGY CONSERVATION REQUIREMENTS.
22. TENANT CONTRACTOR TO VERIFY ALL EXISTING DOOR HARDWARE MEETS LOCAL, NATIONAL CODES, AND ORDINANCES. ALL EXISTING LOCKSETS SHALL ACCEPT BEST CORE.
23. TENANT CONTRACTOR TO VERIFY ALL EXISTING LOCKS WITH BEST CORES TO SECURE ALL VALVES OR HATCHES ACCESSING THE PREMISES FROM THE EXTERIOR OR COMMON AREAS OF THE BUILDING SHELL. ALL EMERGENCY EXIT DOORS AND AT THE REAR DOUBLE DOOR SHALL HAVE PANIC HARDWARE. THERE SHALL BE NO EXTERIOR HARDWARE OR PULLS ON ANY EXTERIOR DOOR OTHER THAN THE FRONT ENTRANCE DOOR.

PER ADA, 2010

THRESHOLDS (404.2.5):
- 1/2" HIGH MAXIMUM (3/4" FOR EXTERIOR SLIDING DOORS)
- SLOPE NO GREATER THAN 1:12

DOOR HARDWARE (4.13.9):
- SHAPE OF OPERATING DEVICES MUST BE EASY TO GRASP WITH ONE HAND
- NO TIGHT GRASPING, TIGHT PINCHING, OR TWISTING OF THE WRIST TO OPERATE
- LEVERS AND U-SHAPED HANDLES ARE ACCEPTABLE
- NO SPECIFIC PROJECTION IS REQUIRED FOR PULLS
- NO HIGHER THAN 48" ABOVE FINISHED FLOOR

CLOSING SPEED (404.2.8):
- SWEEP PERIOD - 3 SECONDS MINIMUM
- FROM AN OPEN POSITION OF 70 TO A POINT 3 INCHES FROM THE LATCH
- MEASURED TO THE LEADING EDGE OF THE DOOR
- DELAYED ACTION IS NOT A CODE REQUIREMENT

OPENING FORCE (404.2.9):
- EXTERIOR HINGED DOORS; 8 1/2 LBS MAXIMUM
- INTERIOR HINGED DOORS; 5 LBS MAXIMUM
- FIRE DOORS: UP TO THE AUTHORITY HAVING JURISDICTION (SIZE 3 RECOMMENDED FOR FIRE DOORS PER NFPA.)

DOOR REMARKS

EXTERIOR DOOR REMARKS

1.1 NEW/EXISTING PROVIDE 1" TALL LETTERING ABOVE DOOR "THIS DOOR TO REMAIN UNLOCKED WHEN BUILDING IS OCCUPIED" AS REQUIRED BY CODE.

1.2 REMOVE ALL EXTERIOR PULLS AND INSTALL BLANKS AT HOLES.

1.3 EXTERIOR WALL MOUNTED DOOR BELL TO RING AT TWO LOCATIONS INSTALLED BY TENANT CONTRACTOR, REF ELECTRICAL

1.4 NEW/EXISTING INSTALL PANIC HARDWARE IN ACTIVE LEAF.

1.5 NEW/EXISTING INSTALL DETEX EAX 500 EXIT ALARM WITH MAGNETIC CONTACT SWITCHES AND BEST-7 PIN CYLINDER. PROVIDE I/C COMPATIBLE CORES, RIM CYLINDERS AND RIM CYLINDER SPACER. TENANT CONTRACTOR TO INSTALL DOOR ALARM CONTACTS AND TERMINATE DEVICE. ALL WORK BY TENANT CONTRACTOR.

1.6 NEW/EXISTING PROVIDE ACCESSIBLE SIGNAGE AS REQUIRED PER LOCAL CODE FOR ENTRY DOORS. SEE DETAIL1/CS4.0

1.7 INSTALL DETEX V40xEExx711 DELAYED EGRESS PANIC DEVICE WITH BEST-7 PIN CYLINDER. DEVICE TO BE TIED INTO EXISTING/NEW FIRE ALARM SYSTEM.

1.8 NEW/EXISTING PROVIDE THRESHOLD TO MATCH EXISTING, OR PROVIDE NEW ADA COMPLIANCE THRESHOLD - GRAINGER #2RRL1 OR EQUAL.

1.9 NEW/EXISTING PROVIDE GASKET/WEATHER STRIP - PEMKO OR REESE

1.10 NEW/EXISTING PROVIDE PANIC HARDWARE - VON DUPRIN EXIT DEVICE MODEL 3547A, US28 WITHOUT AUDIBLE EXIT ALARM KIT

1.11 TENANT CONTRACTOR TO VERIFY EXISTING DOOR HARDWARE

1.12 NEW/EXISTING TENANT CONTRACTOR TO INSTALL 3" X 3" TUBES FASTENED AND BRACED TO EXISTING CONSTRUCTION ABOVE, LOAD CARRIED TO FLOOR FOR GRILL COIL. COORDINATE WITH DOOR VENDOR FOR INSTALLATION.

1.13 INSTALL TRIDENT-210 4 POINT SELF LOCKING EXIT DEVICE, 3 MOVEABLE, 1 STATIONARY BOLT WITH BATTERY POWERED ALARM. INSTALL WITH TRIDENT TEL-IAL PAIR DOOR APPLICATION KIT AT PAIR OF DOORS.

INTERIOR DOOR REMARKS

2.1 DOOR FRAME AND PANEL IS FACTORY FINISHED BY FITTING ROOM DOOR VENDOR

2.2 PROVIDE "ELIMSON" EASYSWING DOUBLE ACTING DOOR - MODEL NUMBER P11-PLUS, WITH EASY SPRING BUMPER. COLOR: BLACK, AND 9" x 30" VISION PANEL W/ SMOKE TINT BY DOOR MANUFACTURER.

2.3 TENANT CONTRACTOR TO PAINT DOOR WITH CHALK-BOARD PAINT (WF-7) AT LOUNGE SIDE ONLY

2.4 TENANT CONTRACTOR TO PROVIDE AND INSTALL CODED LOCK

2.5 PROVIDE ACCESSIBLE RESTROOM SIGNAGE AS REQUIRED PER LOCAL CODE. SEE DETAIL 4/CS4.0 AND 5/CS4.0

2.6 ACCESSIBLE COAT HOOK MOUNTED AT 48" AFF TO BOTTOM OF HOOK. DOUBLE COAT HOOKS BRADLEY #9134 IN RESTROOM.

2.7 STANDARD COAT HOOK MOUNTED AT 60" AFF TO BOTTOM OF HOOK

2.8 'DOOR SCOPE' DS/1000 MODEL SMALL, COLOR MB CHARCOAL, CENTERED ON THE ACTIVE DOOR PANEL AND AT 60" AFF.

2.9 FITTING ROOM DOORS ARE SHORTER THAN FRAME, REF 1-A1.2

2.10 20"x30" METAL LOUVERS, REF 1-A1.2

2.11 KICKPLATE TO BE INSTALLED AT SALES FLOOR SIDE ONLY

2.12 TENANT CONTRACTOR TO PAINT DOOR WF-5 AT SALES SIDE ONLY. FRAME TO MATCH ADJACENT WALL COLOR

Architect:

brr

ARCHITECT OF RECORD:
BRR ARCHITECTURE, INC
8131 METCALF AVE
SUITE 300
OVERLAND PARK, KS 66204

www.brrarch.com

TEL: 913-262-9095
FAX: 913-262-9044

COPYRIGHT NOTICE

This drawing was prepared for use on a specific site contemporaneously with its issue date and it is not suitable for use on a different project site or at a later time. Use of this drawing on another project or on another project requires the services of properly licensed architects and engineers. Reproduction of this drawing for reuse on another project is not authorized and may be contrary to the law.

Engineer:

Project Owner:

NIKE, Inc.
One Bowerman Drive
Beaverton, OR 97005
(503) 671-6453
www.nike.com

Project Address:

NIKE FACTORY STORE
WATERFORD LAKES
SHOPPING CENTER
449 N. ALAFAYA TRAIL
ORLANDO, FL 32828
TEMPLATE ISSUE DATE: 11/28/2018

Fixture Package:
UNITE

Stamp:
NOT FOR CONSTRUCTION

Issued For:
PERMIT/BID

Issue Date:
11/06/2020

Revisions:

NO.	REASON	DATE

PROJECT MANAGER: KH
CHECKED BY:
DRAWN BY: RAN

Project Number:
62301411

Sheet Title:
DOOR SCHEDULE & DETAILS

Sheet Number:
A1.2

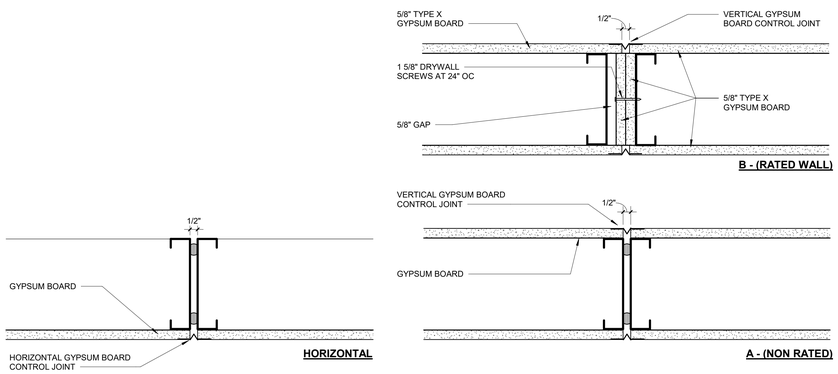

4 **GYPSUM BOARD CONTROL JOINT**
3" = 1'-0"

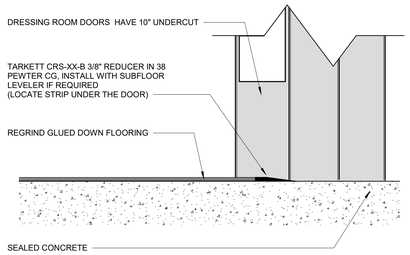

NOTE: TRANSITION STRIPS TO COMPLY WITH THRESHOLD ACCESSIBILITY - MAXIMUM HEIGHT DIFFERENCE NOT TO EXCEED 1/2"

3 **FLOOR TRANSITIONS - REGRIND TO CONC. FLOOR**
6" = 1'-0"

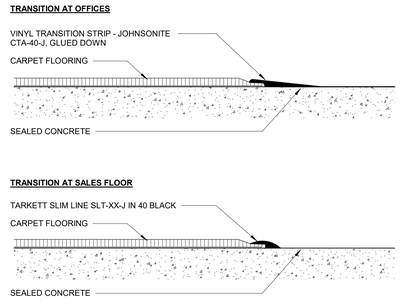

NOTE: TRANSITION STRIPS TO COMPLY WITH THRESHOLD ACCESSIBILITY - MAXIMUM HEIGHT DIFFERENCE NOT TO EXCEED 1/2"

2 **FLOOR TRANSITIONS - CARPET TO CONC. FLOOR**
6" = 1'-0"

SHEET NOTES

A. ALL WALLS, GYPSUM BOARD CEILINGS, SHEET METAL DUCT WORK, CEILING STRUCTURE, CONDUIT, AND INTERIOR DRAIN PIPES TO BE PAINTED WF-1 UNLESS OTHERWISE NOTED. ALL CONDUIT, SPRINKLER PIPE, PLUMBING PIPE, STRUCTURAL JOISTS AND BOTTOM OF ROOF DECK TO BE PAINTED CF-1 IN SALES AREA.

B. ALL NEW AND RELOCATED CONDUIT, UNISTRUT, ETC. INSTALLED IN CEILING SPACE TO BE PAINTED TO MATCH CEILING PAINT COLOR WITH EXCEPTION OF UNI-STRUT LIGHTING GRID. BY TENANT CONTRACTOR

C. PAINT TELEPHONE AND ELECTRICAL PANEL BACKBOARDS TO MATCH WALLS.

D. BASE TO BE B-1 THROUGHOUT SPACE U.N.O., B-1 TOP SET CONTINUOUS AT CARPET INSTALLATIONS.

E. ALL SURFACES CONSTRUCTED BY LANDLORDS TENANT CONTRACTOR TO BE PREPARED AND PRIMED READY FOR PAINT ACCORDING TO MANUFACTURER'S RECOMMENDATIONS.

F. NORTH, EAST, SOUTH, AND WEST WALLS ARE BASED ON "PROJECT NORTH"

G. SUBMIT SAMPLES OF ALL FINISH MATERIALS TO ARCHITECT FOR APPROVAL WITHIN (7) DAYS OF AWARD OF CONTRACT. FINISH WORK SHALL NOT COMMENCE UNTIL FINISHES HAVE BEEN APPROVED.

H. PROVIDE REDUCER/TRANSITION STRIPS AT ALL FLOORING TRANSITIONS. REFER TO DOOR SCHEDULE.

I. ALL SALES FLOOR WALLS TO BE PAINTED SHALL BE EGGSHELL FINISH U.N.O. DOORS AND DOOR FRAMES SHALL BE SEMI-GLOSS. OFFICE AND RESTROOM WALLS SHALL BE SEMI GLOSS.

J. PAINT EXPOSED FLEX CONDUIT UNDER CASH REGISTERS "FLAT BLACK", WF-5.

K. ALL SALES FLOOR CEILING PAINT TO BE DRYFALL TYPE.

L. TENANT CONTRACTOR TO PROVIDE PAINT TOUCH UP AFTER FIXTURE INSTALL AND STOCKING.

KEYNOTES

1. FLOOR LINE KNOCK-OUT BY FLOORING VENDOR.
2. STRUCTURAL COLUMN TO PAINT WF-2 SEMI GLOSS IN SALES FLOOR AND BOH AREAS.
3. TENANT CONTRACTOR TO ESTABLISH CENTER LINE FOR ALIGNMENT OF SALES FLOOR DRIVE AISLES.
4. EDGE OF RUG TO ALIGN WITH CORNER OF WALL
5. NOT USED
6. INSTALL VINYL TRANSITION STRIP JOHNSONITE CTA-40-J GLUED DOWN AT CARPET TO SEALED CONCRETE FLOOR TRANSITION. SEE DETAIL 2/A2.0
7. DOOR PANEL TO BE PAINTED WF-7 AT EMPLOYEE LOUNGE SIDE
8. STOREFRONT GRAPHICS ON GLAZING BY NIKE VENDOR. TENANT CONTRACTOR TO COORDINATE WITH VENDOR TO INSTALL GRAPHICS.
9. INSTALL TRANSITION STRIP AT CARPET - TARKETT SLIM LINE SLT-XX-J, 40 BLACK. SEE DETAIL 2/A2.0
10. CUSTOM WALL PAPER GRAPHIC BY VENDOR. TENANT CONTRACTOR TO PROVIDE A LEVEL 4 FINISH.
11. LOCATION FOR RFID PAINT SHIELD ONLY. NOTE RFID PAINT SHIELD TO BE APPLIED BEFORE ANY SWITCHES, CONDUITS, ETC ARE SCREWED TO IT. TENANT CONTRACTOR TO INSPECT FINISH OF RFID PAINT FOR ANY DAMAGES. TOUCH UP RFID PAINT AS REQUIRED.
12. INSTALL TRANSITION STRIP AT REGRIND TO SEALED CONCRETE FLOOR TRANSITION. SEE DETAIL 3/A2.0

NOTE: PROVIDE TRU PC CONCRETE TOPPING AT SALES. COORDINATE WITH FLOORING VENDOR.

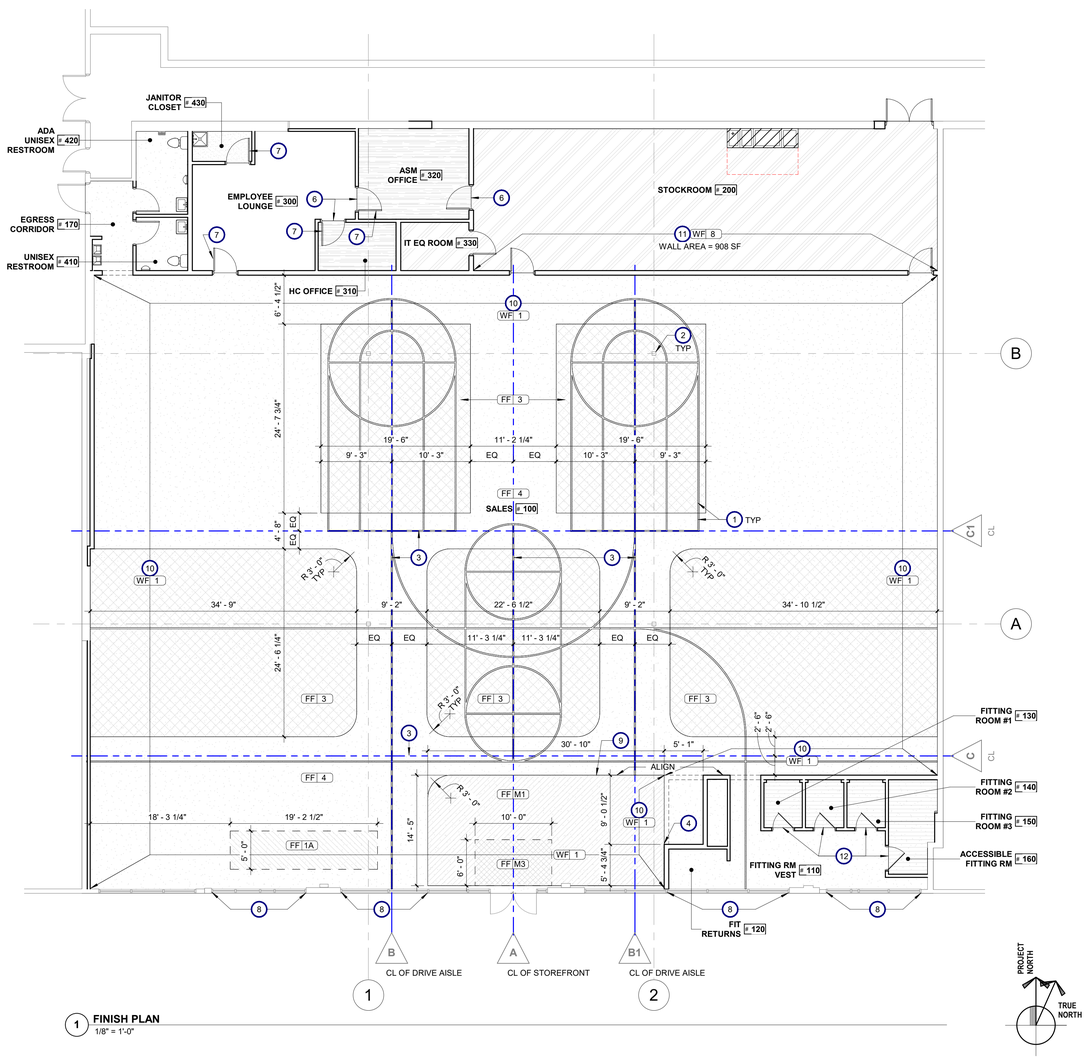

1 **FINISH PLAN**
1/8" = 1'-0"

Architect:

brr

ARCHITECT OF RECORD:
BRR ARCHITECTURE, INC
8131 METCALF AVE
SUITE 300
OVERLAND PARK, KS 66204

www.brrarch.com

TEL: 913-262-9095
FAX: 913-262-9044

COPYRIGHT NOTICE

This drawing was prepared for use on a specific site contemporaneously with its issue date and it is not suitable for use on a different project site or at a later time. Use of this drawing on another project or on another project requires the services of properly licensed architects and engineers. Reproduction of this drawing for reuse on another project is not authorized and may be contrary to the law.

Engineer:

Project Owner:

NIKE, Inc.
One Bowerman Drive
Beaverton, OR 97005
(503) 671-6453
www.nike.com

Project Address:

NIKE FACTORY STORE
WATERFORD LAKES
SHOPPING CENTER
449 N. ALAFAYA TRAIL
ORLANDO, FL 32828
TEMPLATE ISSUE DATE: 11/28/2018

Fixture Package:
UNITE

Stamp:
NOT FOR CONSTRUCTION

Issued For:
PERMIT/BID

Issue Date:
11/06/2020

Revisions:

NO.	REASON	DATE

PROJECT MANAGER: KH
CHECKED BY:
DRAWN BY: RAN

Project Number:
62301411

Sheet Title:
FINISH PLAN

Sheet Number:
A2.0

VENDOR NOTES

CONCRETE FLOOR DELIVERY BY LANDLORD

CONCRETE FLOOR SLABS SHALL BE CONSTRUCTED TO A SURFACE PLANE TOLERANCE OF 1/8" OF ELEVATION VARIATION IN 10' OF HORIZONTAL DIMENSION IN ANY DIRECTION. CONCRETE SHALL BE UNIFORM IN COLOR, FREE FROM ALL STAINS, MARRING, OR VISIBLE DEFECTS, WITHOUT THE NEED FOR ANY PATCHING, TOPPING, LEVELING, OR GRINDING. IT IS THE TENANT'S SPECIFIC INTENT TO PROVIDE A POLISHED EXISTING CONCRETE SLAB AS A FINISHED FLOOR; THEREFORE, ANY IMPERFECTIONS OUTLINED ABOVE WILL BE CORRECTED BY THE TENANT'S CONTRACTOR AT LANDLORD'S EXPENSE. FLOOR SLABS SHALL BE VOID OF METAL KEY-KOLD OR ZIP STRIP JOINTS, ALL JOINTS OR EXPANSION JOINTS SHALL BE FILLED FLUSH TO THE FINISHED CONCRETE SURFACE WITH AN ELASTROMERIC SEALANT APPROVED BY TENANT'S ARCHITECT. COLD JOINTS WILL BE SEALED AND FILLED BY THE TENANT AND LANDLORD WILL PROVIDE $1500 ALLOWANCE FOR THIS WORK.

CONCRETE FLOORING PREP

POST DEMOLITION, TENANT CONTRACTOR PROVIDE 40 GRIT DIAMOND POLISHING ON AN HTC 800 TO ESTABLISH APPROPRIATE FLOORING SURFACE ON ALL FLOOR AREAS TO RECEIVE FF-4 AND FF-5 FINISH. TENANT CONTRACTOR TO COORDINATE WITH NIKE PROJECT MANAGER TO VERIFY CONCRETE SLAB CONDITION POST 40 GRIT POLISH. NIKE PROJECT MANAGER TO EVALUATE AND DETERMINE IF STAIN/POLISH OR EPOXY FLOORING ALTERNATE SHOULD BE INSTALLED.

CONCRETE MOISTURE TESTING

-TENANT CONTRACTOR TO PROVIDE MOISTURE TESTING OF INTERIOR SLAB WHERE EPOXY, CARPETING, VINYL AND REGRIND ARE TO BE INSTALLED. TESTING TO BE ACCORDING TO ASTM TEST METHOD F 1869 (CALCIUM CHLORIDE TEST).
-TESTING SHOULD BE DONE AFTER BUILDING IS FULLY ENCLOSED AND HVAC HAS BEEN OPERATING FOR AT LEAST ONE WEEK.
-PROVIDE TEST LOCATIONS AS FOLLOWS; THREE LOCATIONS FOR SLAB AREAS UP TO 1000 SQ FT AND ONE ADDITIONAL LOCATION FOR EACH ADDITIONAL 1000 SQ FT OR FRACTION THEREOF.
-PROVIDE AT LEAST ONE TEST LOCATION WITHIN 3' OF EACH EXTERIOR WALL.
-TESTED AREAS SHALL BE 20"X20" MIN. CLEANED AND EXPOSED 24" HRS IN ADVANCE OF TESTING AND FREE OF ALL FOREIGN SUBSTANCES, ALL RESIDUAL ADHESIVES, CURING COMPOUNDS, SEALERS, PAINTS, FLOOR COVERINGS ETC.
-TEMPERATURE AND HUMIDITY LEVELS SHOULD BE AS EXPECTED DURING NORMAL USE OR AT MIN BETWEEN 65°-85° F AND 45%-55% RELATIVE HUMIDITY.
-TENANT CONTRACTOR TO VERIFY TEST RESULTS WITH ALL FLOORING MANUFACTURERS SPECIFICATIONS. CONSULT MANUFACTURER AND OWNER WHEN RESULTS ARE IN EXCESS OF SPECIFIED LIMITS FOR SLAB MOISTURE LEVELS.
-PROVIDE DOCUMENTATION OF MOISTURE TEST RESULTS TO NIKE AS PART OF CLOSE OUT DOCUMENTS.

MAGNETIC RECEPTIVE PRIMER SPECIFICATIONS FOR USE

1. CONTACT PHOTOCRAFT - COURTNEY HAHN - 503.225.0515 NO LATER THAN (30) DAYS PRIOR TO INSTALLATION TO REQUEST SHIPMENT OF THE REQUIRED MATERIAL TO THE SITE.
2. CLEAN PAINTED WALL THOROUGHLY TO ENSURE SURFACE AREA IS FREE OF DIRT, GREASE OR OIL. SUGGESTED CLEANER: 8 DROPS OF CONCENTRATED DISHWASHING LIQUID SOAP TO 16 OZ OF WATER.
3. APPLY A COAT OF STANDARD PRIMER/SEALER TO DRYWALL THAT HAS NOT BEEN PAINTED PRIOR TO APPLYING THE MAGNETIC RECEPTIVE PRIMER.
4. STIR MAGNETIC RECEPTIVE PRIMER THOROUGHLY
5. APPLY MAGNETIC RECEPTIVE PRIMER WITH A 3/8" NAP ROLLER. THE PRIMER WILL DRY FAIRLY QUICKLY. THE PROCESS FOR THIS INSTALLATION IS TO APPLY THE MATERIAL "LIKE APPLYING PEANUT BUTTER TO BREAD'. APPLY THICK AND USE JOINT KNIFE TO FILL IN AREAS. SKIM SURFACE (KNOCK DOWN ANY 'TEXTURE AND HEAVY' ROLLER LINES) WITH A 12" WIDE JOINT KNIFE (NOTE TO ROUND OFF THE LEFT AND RIGHT CORNERS ON THE JOINT KNIFE TO PREVENT THE EDGES FROM CUTTING INTO THE PRIMED SURFACE)
6. ALLOW PRIMER TO DRY TO THE TOUCH, APPROX 30 MINUTES TO 60 MINUTES BETWEEN COATS (2 COATS REQUIRED)
7. ONE GALLON OF THE MAGNETIC RECEPTIVE PRIMER WILL COVER NO MORE THAN 150 SQFT - IT IS VERY IMPORTANT TO MAINTAIN A CERTAIN QUANTITY OF MAGNETIC PRIMER PER SQFT FOR PROPER ADHESION OF THE MAGNETIC BACKER MATERIAL.
8. PRIOR TO THE APPLICATION OF THE FINISH PAINT; ALLOW THE MAGNETIC RECEPTIVE PRIMER TO DRY THOROUGHLY
9. IT IS VERY IMPORTANT THAT THE MAGNETIC BACKER MATERIAL IS TESTED ON THE PRIMED WALL TO ENSURE THE MAGNETIC BACKER HAS GOOD ADHESION (DOES NOT FALL OFF) PRIOR TO APPLYING THE FINAL FINISH TOPCOAT PAINT.
10. IF THERE ARE ANY QUESTIONS IN REGARD TO THE MAGNETIC RECEPTIVE PRIMER MATERIAL OR INSTALLATION; PLEASE CONTACT PHOTOCRAFT - EJ HAAR - 503.784.3893

POLISHING SPECIFICATIONS/PROCEDURES

USING PLANETARY DIAMOND GRINDERS EQUIPPED WITH INDUSTRIAL GRADE VACUUMS, OPEN CONCRETE BY FULLY GRINDING WITH THE FOLLOWING SEQUENCE:

1. GRIND USING 40-GRIT METAL TOOLING
2. GRIND USING 80-GRIT METAL TOOLING
3. GRIND USING 150-GRIT METAL TOOLING

AT THIS POINT THE CONCRETE SHOULD BE "OPEN/POUROUS" AND, USING THE SAME EQUIPMENT, THE POLISHING PROCESS WILL BEGIN WITH THE FOLLOWING SEQUENCE:

4. POLISH USING 100-GRIT RESIN TOOLING
5. POLISH USING 200-GRIT RESIN TOOLING
6. SWEEP/VACUUM TO REMOVE ALL EXCESS DUST
7. SPRAY APPLY SPECIFIED DYE AND WORK INTO THE CONCRETE
8. BURNISH OR SCRUB TO REMOVE EXCESS RESIDUE
9. SPRAY APPLY SPECIFIED DENSIFIER TO THE POINT OF REJECTION
10. ONCE CURED, SWEEP/VACUUM TO REMOVE ANY DENSIFIER RESIDUE
11. CONTINUE POLISHING USING 400-GRIT RESIN TOOLING
12. POLISH USING 800-GRIT RESIN TOOLING
13. FINISH POLISH USING 1,500-GRIT RESIN TOOLING
14. SPRAY APPLY SPECIFIED SEALER/PROTECTOR AND WORK INTO THE CONCRETE
15. ALLOW TO DRY, THEN BURNISH WITH A 1,500-GRIT DIAMOND IMPREGNATED POLISHING PAD

NIKE BACK OF HOUSE

BREAKROOM - POLISH IN CONFORMITY WITH SALES FLOOR TO 800 FINISH
RESTROOMS - GRIND TO 100 METAL AND INSTALL A MINIMUM OF 6 MILS CLEAR POLYASPARTIC
STOCKROOM - GRIND TO 100 METAL AND 2 COATS OF FF-5

NIKE PROCESS - NEW CONSTRUCTION

50% OF THE FLOOR WILL BE PROVIDED FREE AND CLEAR OF ALL OTHER TRADES AND EQUIPMENT.
UPON COMPLETION OF THE FIRST HALF, THE BALANCE WILL BE PROVIDED WITHOUT DELAY.
FLOOR CONTRACTOR TO PROVIDE GENERATOR TO RUN THEIR EQUIPMENT.
TENANT CONTRACTOR TO PROVIDE DUMPSTER.

DECORATIVE CONCRETE OVERLAY SPECIFICATIONS/PROCEDURES

1. SURFACE PREPARATION: REMOVE ALL UNSOUND CONCRETE. REPAIR ALL DEEP, NON-MOVING CRACKS AND DETERIORATED CONCRETE. PROFILE SURFACE BY SHOT-BLASTING, HEAVY METAL GRINDING OR SCARIFYING TO ACHIEVE A TEXTURED SURFACE (ICRI CSP RATING OF 3-5) THAT IS FREE OF COATINGS, SEALERS, OIL, GREASE AND OTHER SURFACE CONTAMINANTS.
2. PRIMING: PRIME ALL POUROUS, CLEAN SURFACES WITH MANUFACTURER'S RECOMMENDED EPOXY PRIMER PER MANUFACTURER'S INSTRUCTIONS.
3. APPLICATION: APPLY FROM 3/8" – 1" IN ONE POUR FROM ONE SIDE TO THE OTHER MAINTAINING A WET EDGE AT ALL TIMES. LEVEL AND FLATTEN WITH SCREED DARBY OR GAUGE RAKE. LIGHTLY FINISH WITH FLOAT OR HAND TROWEL WHERE NEEDED. DO NOT OVERWORK THE SURFACE. HONOR ALL EXPANSION AND CONTROL JOINTS.
4. CURING AND PROTECTION: KEEP SURFACE WET FOR 1-2 HOURS IMMEDIATELY AFTER PLACEMENT USING A HAND PUMP SPRAYER WITH POTABLE WATER.
5. POLISHING: SURFACE CAN BE POLISHED PER STANDARD POLISHING SPECIFICATIONS 12 HOURS AFTER INITIAL PLACEMENT OF OVERLAY.

DOOR NOTES

PAINT ALL DOORS PER THE FOLLOWING:

ACRYLIC ENAMELS/ ACRYLIC PRIMER

SEMI-GLOSS FINISH
1ST COAT: BM ULTRA SPEC HP ACRYLIC METAL PRIMER HP04
2ND COAT: BM ULTRA SPEC HP D.T.M. ACRYLIC SEMI-GLOSS ENAMEL HP29
3RD COAT: BM ULTRA SPEC HP D.T.M. ACRYLIC SEMI-GLOSS ENAMEL HP29

ROOM SCHEDULE

RM #	NAME	AREA	FLOOR FINISH	BASE FINISH	WALL MATERIAL/FINISH				CEILING			REMARKS
					NORTH WALL	SOUTH WALL	WEST WALL	EAST WALL	CEILING MATERIAL	CEILING FINISH	CEILING HEIGHT	
100	SALES	8335 SF	REF FINISH PLAN	B-1	WF-1	WF-1	WF-1	WF-1	DECK	CF-1	VARIES	
110	FITTING RM VEST	192 SF	FF-4	B-1	WF-1	WF-1	WF-1	WF-1	GWB	CF-2	13' - 11"	
120	FIT RETURNS	40 SF	FF-4	B-1	WF-1	WF-1	WF-1	WF-1	GWB	CF-2	13' - 11"	
130	FITTING ROOM #1	31 SF	FF-M2	B-1	WF-1	WF-1	WF-1	WF-1	GWB	CF-2	9' - 0"	
140	FITTING ROOM #2	31 SF	FF-M2	B-1	WF-1	WF-1	WF-1	WF-1	GWB	CF-2	9' - 0"	
150	FITTING ROOM #3	31 SF	FF-M2	B-1	WF-1	WF-1	WF-1	WF-1	GWB	CF-2	9' - 0"	
160	ACCESSIBLE FITTING RM	72 SF	FF-M2	B-1	WF-1	WF-1	WF-1	WF-1	GWB	CF-2	9' - 0"	
170	EGRESS CORRIDOR	64 SF	FF-4	B-1	WF-1	WF-1	WF-1	WF-1	GWB	CF-2	9' - 0"	
200	STOCKROOM	1120 SF	FF-5	B-1	WF-1	WF-1/ WF-8	WF-1	WF-1	DECK	-	VARIES	1
300	EMPLOYEE LOUNGE	315 SF	FF-4	B-1	WF-1	WF-1	WF-1	WF-1	ACT	-	9' - 0"	
310	HC OFFICE	64 SF	FF-2	B-1	WF-1	WF-1	WF-1	WF-1	ACT	-	9' - 0"	
320	ASM OFFICE	171 SF	FF-2	B-1	WF-1	WF-1	WF-1	WF-1	ACT	-	9' - 0"	
330	IT EQ ROOM	56 SF	FF-5	B-1	WF-1	WF-1	WF-1	WF-1	ACT	-	12' - 0"	
410	UNISEX RESTROOM	47 SF	FF-4	B-1	WF-2	WF-2	WF-2	WF-10/ G-1	GWB	CF-2	9' - 0"	
420	ADA UNISEX RESTROOM	73 SF	FF-4	B-1	WF-2	WF-2	WF-2	WF-10/ G-1	GWB	CF-2	9' - 0"	
430	JANITOR CLOSET	30 SF	FF-7	B-1	WF-2/ WF-9	WF-2/ WF-9	WF-2/ WF-9	WF-2/ WF-9	GWB	CF-2	12' - 0"	

GENERAL NOTES:
1. WALL DIRECTIONS REFER TO PROJECT NORTH.
2. REFER TO WALL FINISH PLAN ON SHEET A2.0 FOR ADDITIONAL FINISH INFORMATION.

SCHEDULE REMARKS:
1. REFER TO FINISH PLAN FOR LOCATION OF WF-8.

FLOOR FINISH MATERIAL SCHEDULE

TYPE	MARK	MANUFACTURER	MODEL	FINISH	ADDITIONAL INFO
X	0				
B	1	ROPPE	VINYL CONTINUOUS COVE BASE	BLACK - 100	
FF	1A	ULINE	ANTI-FATIGUE MAT	BLACK	5/8" THICKNESS, 4'-0" WIDE
FF	2	TARKETT	CACHE TWEED A0002	SATURATED GREY 42703	TENANT CONTRACTOR TO COORDINATE WITH NIKE OPERATION TEAM FOR INSTALLATION
FF	3	PROSOCO AMERIPOLISH	CONSOLIDECK LS 3DHS/3DSP	1,500-GRIT POLISHED CONCRETE TO "SALT & PEPPER" EFFECT WITH AMERIPOLISH CLASSIC DYE (BLACK)	NON MOISTURE TOLERANT. ALL DIVOTS, JOINTS AND CRACKS TO BE FILLED PRIOR TO ANY FLOOR FINISH WORK. PROTECT ADJACENT SLAB FROM STAIN. INSTALLATION AND SURFACE PREP PER MANUFACTURER'S SPECIFICATIONS. SEE DIVISION 03300, 03550 AND 033510 IN SP SHEETS. REFER TO CONCRETE FLOORING PREP NOTES AND APPROVED VENDORS THIS SHEET. G.C. TO INCLUDE PREP WORK IN BASE BID
FF	4	PROSOCO AMERIPOLISH	CONSOLIDECK LS 3DHS/3DSP	1,500-GRIT POLISHED CONCRETE TO "SALT & PEPPER" EFFECT WITH NATURAL FINISH	NON MOISTURE TOLERANT. ALL DIVOTS, JOINTS AND CRACKS TO BE FILLED PRIOR TO ANY FLOOR FINISH WORK. PROTECT ADJACENT SLAB FROM STAIN. INSTALLATION AND SURFACE PREP PER MANUFACTURER'S SPECIFICATIONS. SEE DIVISION 03300, 03550 AND 033510 IN AS SHEETS. REFER TO CONCRETE FLOORING PREP NOTES AND APPROVED VENDORS THIS SHEET. G.C. TO INCLUDE PREP WORK IN BASE BID
FF	5	CHEM-MASTERS LATICRETE L&M	POLYSEAL WB LUMISEAL FX	LIGHT GRIND WITH TWO (2) COATS OF CLEAR SEALER	INSTALL PER MANUFACTURER SPECIFICATIONS, F.S.R. CLASS II
FF	7	SHERWIN WILLIAMS HP SPARTACOTE	PACECOTE 4844 SPARTA-FLEX	LIGHT GRIND WITH CLEAR POLYASPARTIC SEALER - MINIMUM OF 6 MILS	FLOOR VENDOR TO INSTALL 2 COATS POLYASPARITIC SEAL. ALL DIVOTS, JOINTS AND CRACKS TO BE FILLED PRIOR TO ANY FLOOR FINISH WORK.
FF	8	SHERWIN WILLIAMS	SW 6903 CHEERFUL		TENANT CONTRACTOR COORDINATE W/ ELEC PANEL AND EGRESS PATH LOCATIONS, PAINTED PRIOR TO SEALING STOCKROOM FLOOR. PAINTED 3" WIDE DIAGONAL STRIPES AT 24" O.C.
FF	9	DALTILE	ANCHORAGE- COLORBODY PORCELAIN	12"x24" UNPOLISHED DARK GRAY - AC08	INSTALL PER MANUFACTURER SPECIFICATIONS
FF	M1	LIORA MANNE	CUSTOM WALL-TO-WALL RUG	#6002 ONYX	MAT TO BE GLUED DOWN. COORDINATE WITH VENDOR FOR INSTALLATION PER MANUFACTURER'S RECOMMENDATION., VACUUM AS NEEDED.
FF	M2	MODERN MATERIALS LAB	NIKE GRIND RUBBER FLOORING	5105 ICE GRAY	9MM MAT TO BE GLUED DOWN WITHIN BUILT-IN FITTING ROOM. TENANT CONTRACTOR APPLY 2 COATS OF MANUFACTERERS SPEC CLEAR SEALER DURING INSTALL. COORDINATE WITH VENDOR FOR INSTALLATION PER MANUFACTURER'S RECOMMENDATION.
FF	M3	VAN GELDER	CUSTOM WALK-OFF MAT - PROTECT ULTIMATE	BASE MAT COLOR: SMOKE, INLAY COLOR: STEEL GRAY	

APPROXIMATE FLOOR AREA

TYPE	AREA
Floor: (Nike) FF-1A	96 SF
Floor: (Nike) FF-2	252 SF
Floor: (Nike) FF-3	3168 SF
Floor: (Nike) FF-4	9107 SF
Floor: (Nike) FF-5	1213 SF
Floor: (Nike) FF-7	34 SF
Floor: (Nike) FF-M1	443 SF
Floor: (Nike) FF-M2	166 SF
Floor: (Nike) FF-M3	60 SF

NIKE APPROVED SALES FLOORING VENDORS: NO SUBSTITUTIONS

PREFERRED INDY
1360 S. 10TH STREET
NOBLESVILLE, IN 46060
ATTN: JOHN NORTON
TEL: 317.770.0070

NATIONAL POLISHING SYSTEMS
5145 BRECKSVILLE RD.
RICHFIELD, OH 44286
ATTN: BOB DETMAYER
TEL: 866.856.3711
FAX: 330.659.2042
bdetmayer@nationalpolishing.com

WALL FINISH MATERIAL SCHEDULE

TYPE	MARK	MANUFACTURER	MODEL	FINISH	ADDITIONAL INFO
X	0				
WF	1	BENJAMIN MOORE	BM MISTY GREY 2124-60	EGGSHELL	ZERO-VOC, F.S.R CLASS I
WF	2	BENJAMIN MOORE	BM MISTY GREY 2124-60	SEMI GLOSS	ZERO-VOC, F.S.R CLASS I
WF	3	BENJAMIN MOORE	BM PEWTER 2121-30	EGGSHELL	ZERO-VOC, F.S.R CLASS I
WF	5	SHERWIN WILLIAMS	ORDER #7080-0248426, VERIFY WITH NIKE	EGGSHELL	PROMAR 200 ZERO-VOC, F.S.R. CLASS I, CUSTOM NIKE CNC GREY
WF	6	PHOTOCRAFT	MAGNETIC RECEPTIVE PRIMER	-	TENANT CONTRACTOR TO PROVIDE. LOW-VOC, SEE MATERIAL & INSTALLATION NOTE ON THIS PAGE, APPLY WF-14 AS TOP COAT
WF	7	ECOS PAINTS	CHALKBOARD PAINT - 111 DOMAIN	-	ROLL ON ONLY - DO NOT SPRAY
WF	8	LessEMF	CuPro-Cote PAINT GLITTER COPPER	-	USE STANDARD LATE PRIMER ON ANY ABSORBENT OR METALLIC SURFACE. DO NOT USE PRIMER ON CuPro-Cote
WF	9	SEQUENTIA	CLASS A 48 PEARL GRAY F.R.P. WAINSCOT	-	+ 4'-0" A.F.F. SEE ELEVATION.
WF	10	DALTILE	2" x 2" MOSAIC (12x24 SHEET)	SEMI-GLOSS ORANGE BURST 1097	REF ELEVATIONS
WF	11	CLE	ZELLIGE	MORACCAN SEASALT	4" x 4" x 3/8" TILE, REF ELEVATIONS

BENJAMIN MOORE CONTACT:
ATTN: ROB CLAYTON
TEL: 503.509.1267
rob.clayton@benjaminmoore.com

GROUT SCHEDULE

TYPE	MARK	MANUFACTURER	MODEL	FINISH	ADDITIONAL INFO
G	1	LATICRETE	1/8"	89 SMOKE GRAY	TYPICAL AT PUBLIC RESTROOMS AND KITCHENETTE

CEILING FINISH MATERIAL SCHEDULE

TYPE	MARK	MANUFACTURER	MODEL	FINISH	ADDITIONAL INFO
X	0				
CF	1	BENJAMIN MOORE	BM MISTY GREY 2124-60	WATERBORNE ACRYLIC DRY FALL EGGSHELL	LOW-VOC, F.S.R. CLASS I
CF	2	BENJAMIN MOORE	BM MISTY GREY 2124-60	EGGSHELL	LOW-VOC, F.S.R. CLASS I

Architect:

brr

ARCHITECT OF RECORD:
BRR ARCHITECTURE, INC
8131 METCALF AVE
SUITE 300
OVERLAND PARK, KS 66204

www.brrarch.com

TEL: 913-262-9095
FAX: 913-262-9044

COPYRIGHT NOTICE

This drawing was prepared for use on a specific site contemporaneously with its issue date and it is not suitable for use on a different project site or at a later time. Use of instruments of service for purposes on another project requires the services of property licensed architects and engineers. Reproduction of this drawing for reuse on another project is not authorized and may be contrary to the law.

Engineer:

Project Owner:

NIKE, Inc.
One Bowerman Drive
Beaverton, OR 97005
(503) 671-6453
www.nike.com

Project Address:

NIKE FACTORY STORE
WATERFORD LAKES
SHOPPING CENTER
449 N. ALAFAYA TRAIL
ORLANDO, FL 32828
TEMPLATE ISSUE DATE: 11/28/2018

Fixture Package:

UNITE

Stamp:

NOT FOR CONSTRUCTION

Issued For:

PERMIT/BID

Issue Date:

11/06/2020

Revisions:

NO.	REASON	DATE

PROJECT MANAGER:
KH
CHECKED BY:
DRAWN BY:
RAN

Project Number:

62301411

Sheet Title:

FINISH AND MATERIAL SCHEDULES

Sheet Number:

A2.1

BOH BREAKDOWN		
ROOM	AREA (SF)	AREA %
STOCK	1171 SF	46%
RESTROOM/JANITOR	181 SF	7%
OFFICE	257 SF	10%
LOUNGE	341 SF	13%
IT EQ ROOM	65 SF	3%
FITTING ROOM	460 SF	18%
CIRCULATION	73 SF	3%
Total: 8	2548 SF	100%

OFFICE VS STOCK			
ROOM	AREA	TYP %	ACTUAL %
STOCK	1171 SF	70%	58%
OFFICE	844 SF	30%	42%
Total	2015 SF		100%

APPAREL VS FOOTWEAR			
ROOM	AREA	TYP %	ACTUAL %
FOOTWEAR	3752 SF	40%	42%
APPAREL	5273 SF	60%	58%
Total	9025 SF		100%

SALES VS BOH			
ROOM	AREA	TYP %	ACTUAL %
SALES	9099 SF	75%	82%
BOH	2014 SF	25%	18%
Total	11113 SF		100%

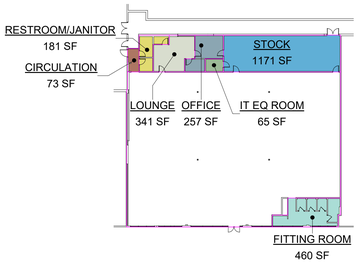

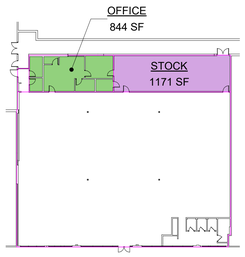

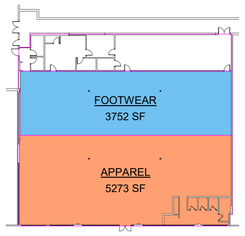

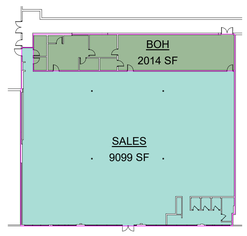

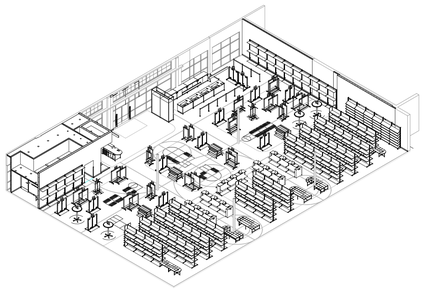

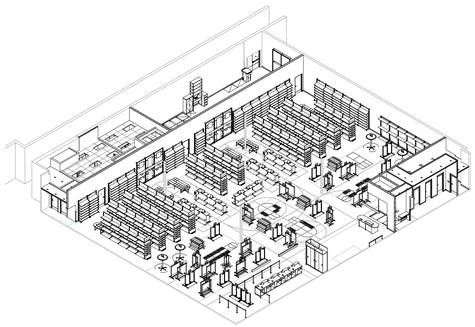

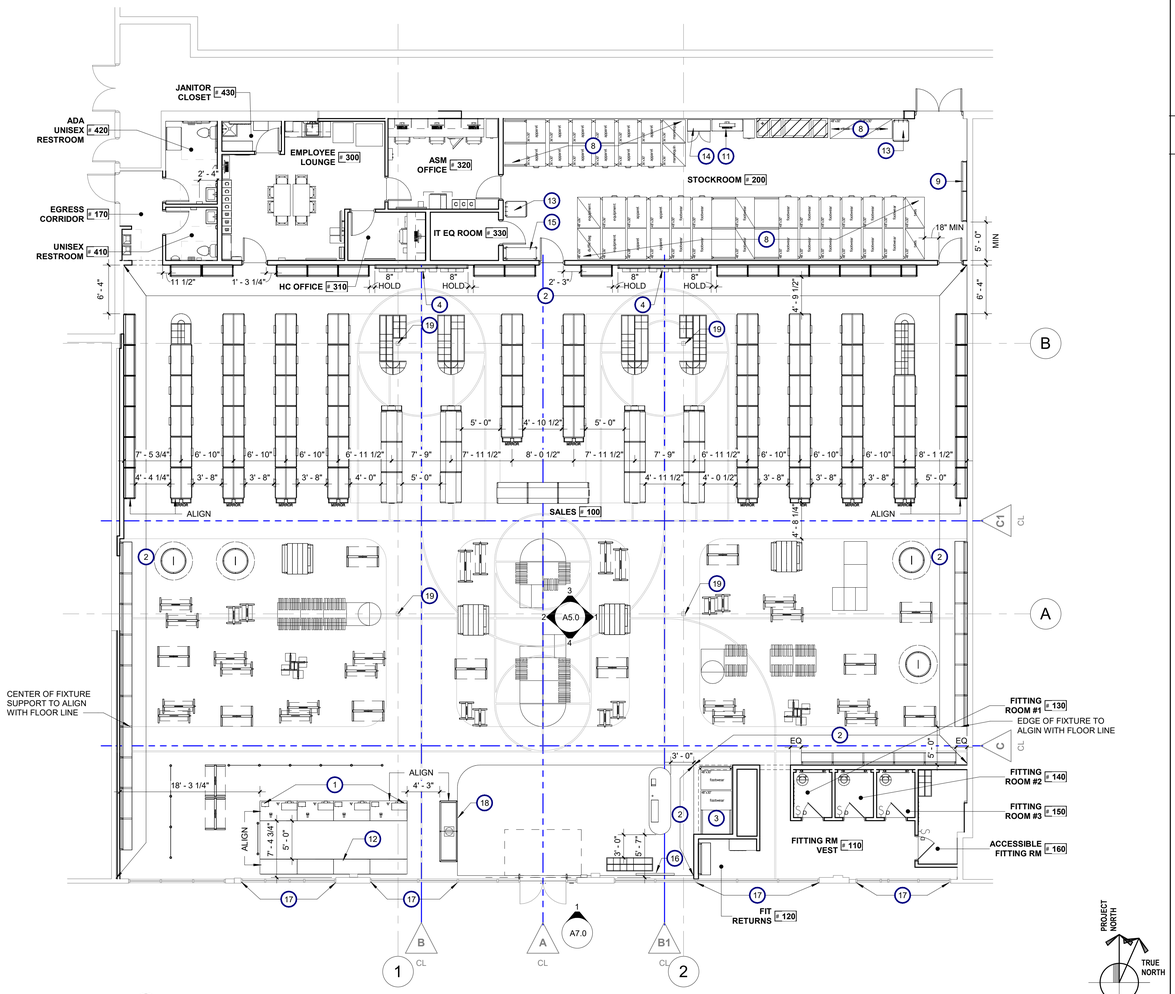

1 FIXTURE PLAN
1/8" = 1'-0"

SHEET NOTES

A. MINIMUM AISLE WIDTH BETWEEN FIXTURES SHALL BE 36" MINIMUM. EXIT AISLE WIDTH SHALL BE 44" MIN.

B. TENANT CONTRACTOR TO PROVIDE ALL BACKING PLATES OR 2x BLOCKING BETWEEN STUDS FOR ALL PERIMETER FIXTURES, WALL MOUNTED FIXTURES AND ACCESSORIES.

C. FIXTURE INSTALL TO BE UNDER SEPARATE PERMIT WHERE REQUIRED BY LOCAL JURISDICTION. FIXTURE MANUFACTURER TO VERIFY REQUIREMENTS AND TO PROVIDE DRAWINGS AND ENGINEERING IF REQUIRED.

D. ALL SALES FIXTURES TO BE SUPPLIED AND INSTALLED BY FIXTURE VENDOR. TENANT CONTRACTOR TO COORDINATE WITH VENDOR FOR INSTALLATION.

E. ALL BACK OF HOUSE BUILT-IN FIXTURES (OFFICE COUNTER TOP, LOUNGE CABINET, LOUNGE PC SHELF, TV SHELF) TO BE SUPPLIED AND INSTALLED BY TENANT CONTRACTOR UNLESS NOTED OTHERWISE ON THE DRAWING.

F. PROTOTYPE FIXTURE VENDOR: RTC
CONTACT: RICH KURCZEWSKI EMAIL: RKURCZEWSKI@RTC.OM
PROTOTYPE MOBILE SHELVING VENDOR: PIPP MOBILE SHELVING
CONTACT: ED SHERMAN EMAIL: EDSHERMAN@PIPPMOBILE.COM

KEYNOTES

1. CASH WRAP - SUPPLIED AND, INSTALLED BY FIXTURE VENDOR REFER TO ELECTRICAL DRAWINGS FOR POWER AND DATA REQUIREMENTS BY TENANT CONTRACTOR AND FOR ELECT. ROUGH-IN
2. CUSTOM WALLPAPER GRAPHIC BY VENDOR.
3. MINIATURE RACK
4. FOOTWEAR INITIATIVE BY VENDOR
5. NOT USED
6. NOT USED
7. NOT USED
8. MOBILE STORAGE SYSTEM (10' HEIGHT). NIKE VENDOR TO PULL ALL NECESSARY PERMITS.
9. WALL MOUNTED HANGER MANAGEMENT FIXTURES, SUPPLIED BY NIKE INSTALLED BY TENANT CONTRACTOR SEE DETAIL 7 / A6.4
10. NOT USED
11. RECEIVING DESK BY VENDOR
12. REMOVABLE CARDBOARD RECYCLING BIN WITHIN BACKWRAP FIXTURES
13. RECYCLE CONTAINERS PROVIDED BY NIKE AND INSTALLED BY CITY WASTE MANAGEMENT DEPARTMENT. LARGE 96 GAL PLASTIC AND 96 GAL CARDBOARD CONTAINERS IN STOCKROOM.
14. SUPPLY CABINET SUPPLIED BY NIKE, INSTALLED BY TENANT CONTRACTOR
15. MISMATE CART SUPPLIED BY NIKE, INSTALLED BY TENANT CONTRACTOR
16. TICKER SIGNAGE AT STOREFRONT. REF ELEVATIONS
17. GRAPHICS ON GLAZING BY VENDOR
18. ALIGN EDGE OF COMMUNITY WALL WITH EDGE OF CARPET
19. EXISTING STRUCTURAL COLUMN

MALL MAP

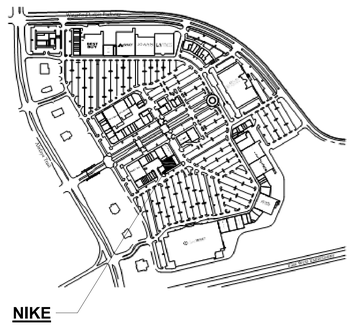

OVERALL BREAKDOWN		
ROOM	AREA	ACTUAL %
STOCK	1171 SF	11%
OFFICE	843 SF	8%
FOOTWEAR	3752 SF	34%
CIRCULATION	74 SF	1%
APPAREL	5273 SF	47%
Project Grand Total	11113 SF	100%

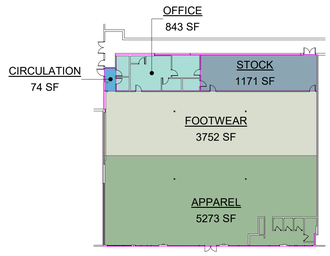

Architect:

brr

ARCHITECT OF RECORD:
BRR ARCHITECTURE, INC
8131 METCALF AVE
SUITE 300
OVERLAND PARK, KS 66204

www.brrarch.com

TEL: 913-262-9095
FAX: 913-262-9044

COPYRIGHT NOTICE

This drawing was prepared for use on a specific site contemporaneously with its issue date and it is not suitable for use on a different project site or at a later time. Use of this drawing on another project or on another project requires the services of properly licensed architects and engineers. Reproduction of this drawing for reuse on another project is not authorized and may be contrary to the law.

Engineer:

Project Owner:

NIKE, Inc.
One Bowerman Drive
Beaverton, OR 97005
(503) 671-6453
www.nike.com

Project Address:

NIKE FACTORY STORE
WATERFORD LAKES
SHOPPING CENTER
449 N. ALAFAYA TRAIL
ORLANDO, FL 32828
TEMPLATE ISSUE DATE: 11/28/2018

Fixture Package:
UNITE

Stamp:
NOT FOR CONSTRUCTION

Issued For:
PERMIT/BID

Issue Date:
11/06/2020

Revisions:

NO.	REASON	DATE

PROJECT MANAGER:
KH
CHECKED BY:
DRAWN BY:
RAN

Project Number:
62301411

Sheet Title:
FIXTURE PLAN

Sheet Number:
A3.0

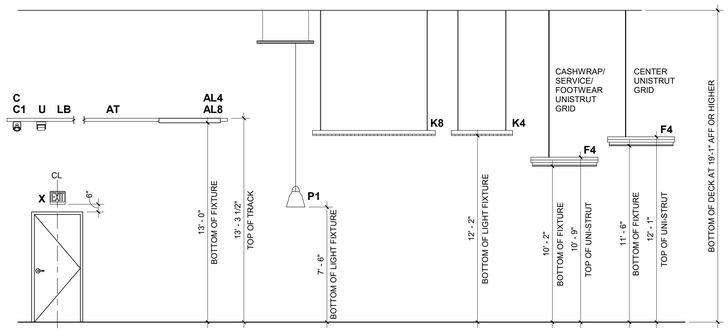

NOTE: ELECTRICIAN TO ADJUST LIGHT THROW SO THAT HALF OF WALL WASHERS HIT TOP OF GRAPHIC, AND OTHER HALF ARE EVENLY DISTRIBUTED ON WALL FIXTURES

4 LIGHTING FIXTURE MOUNTING HEIGHTS
1/4" = 1'-0"

SHEET NOTES

A. TENANT CONTRACTOR TO PROVIDE AND INSTALL EXIT SIGNAGE AS INDICATED ON PLAN.

B. TENANT CONTRACTOR TO BRACE SUSPENDED CEILINGS AS INDICATED IN RCP DETAIL. REF A4.1

C CEILING GRID WHERE OCCURS TO BE CENTERED IN EXTENTS OF ROOM AS INDICATED.

D. NO FASTENING DEVICES TO UNDERSIDE OF DECK AND BOTTOM CHORD OF TRUSSES WILL BE PERMITTED. ALL SUSPENSION FASTENING DEVICES SHALL BE SUSPENDED FROM TOP CHORD OF TRUSSES OR STRUCTURE ABOVE WITH ADEQUATE STRUCTURAL STEEL.

E. TENANT CONTRACTOR TO INSTALL ALL T-BAR EDGE TRIM AND INSTALL PAINTABLE CAULK BETWEEN T-BAR EDGE TRIM AND WALL.

F. ALL LAMPS AND LIGHT FIXTURES WILL BE PURCHASED BY OWNER, INSTALLED BY TENANT CONTRACTOR. TENANT CONTRACTOR TO COORDINATE DELIVERY WITH NIKE SPECIFIED VENDOR.

G. TENANT CONTRACTOR TO SEE ELECTRICAL DRAWINGS FOR ADDITIONAL INFORMATION.

H. ALL CEILING HEIGHTS INDICATED ARE TO BE FROM FINISHED FLOOR UNLESS NOTED OTHERWISE.

I. TENANT CONTRACTOR TO VERIFY EXISTING ROOF FRAMING LOCATIONS AND COORDINATE WITH SHOWN LIGHT LOCATIONS. NOTIFY ARCHITECT OF ANY CONFLICTS PRIOR TO INSTALLATION.

J. NOT USED

K. TENANT CONTRACTOR TO COORDINATE WITH ALL AUDIO/VISUAL, DATA, AND SECURITY VENDORS. WIRING TO BE ROUTED THROUGH UPTURNED UNISTRUT OR IN CONDUIT. NO EXPOSED WIRING ALLOWED COORDINATE FINAL LOCATIONS WITH AUDIO VENDOR, TYCO AND NIKE I.T. SEE ELECTRICAL AND VENDOR DRAWING FOR DIAGRAMMATIC LAYOUT.

L. TENANT CONTRACTOR TO PROVIDE HIGH DUSTING SERVICE WITHIN LAST 2 WEEKS OF CONSTRUCTION; COORDINATE W/ CPM REGARDING EXACT SCHEDULE

M. SPEAKERS TO BE PENDANT MOUNTED.

N. NOT USED

O. AUDIO VENDOR TO ELIMINATE SEPARATE VOLUME CONTROL FOR FITTING ROOM AREA ON SITE.

P. TENANT CONTRACTOR TO VERIFY EXISTING ROOF FRAMING LOCATIONS AND COORDINATE WITH LIGHTING LOCATIONS

Q. REF A4.1 FOR LIGHTING CONNECTION DETAILS

R. SEE MECHANICAL DRAWING FOR DUCTWORK LAYOUT CONNECTED TO EXISTING ROOF TOP UNIT SYSTEM.

S. ALL ROOFING PENETRATIONS TO BE SEALED AND DRIED-IN BY LANDLORD APPROVED ROOFING CONTRACTOR.

LEGEND

NOTE: REFER TO ELECTRICAL DRAWINGS FOR EMERGENCY LIGHTING LOCATIONS

	SIGNAGE TICKER
AT	AMERLUX TRACK
TD	HALSEY 'T3' GRAPHIC DISPLAY TRACK
AL4	LED DOWNLIGHT
C/C1	LED TRACK HEAD
F4	LINEAR LIGHT FIXTURE
K4	STRIP FLUORESCENT W/ WIRE GUARD
K8	TANDEM STRIP FLUORESCENT W/ WIRE GUARD
L	8' / 4' SURFACE LIGHTING
LB	LUXBEAM
M	DOUBLE LAMP 2x4 RECESSED
R/R2	RECESSED LIGHT FIXTURE
UC	UNDERCOUNTER LIGHT
U	WALL WASH TRACK HEAD
X	LED UNIVERSAL EXIT SIGN WITH 90 MINUTE BATTERY BACK UP
	HVAC SUPPLY GRILLE - SEE MECHANICAL PLANS FOR LOCATIONS
	HVAC RETURN GRILLE - SEE MECHANICAL PLANS FOR LOCATIONS
	EXHAUST FAN BY TENANT CONTRACTOR
X'-X"	CEILING HEIGHT ABOVE FINISHED FLOOR AS INDICATED
	24" x 48" SUSPENDED ACOUSTICAL TILE CEILING - ARMSTRONG "CIRRUS SECOND LOOK IT" - 2' X 4' X 5/8", WHITE WITH PRELUDE 15/16" EXPOSED TEE GRID. INSTALL "L" MOLDING AT GRID/WALL INTERFACES.
	GYPSUM BOARD CEILING - ON METAL FRAMING SUSPENDED FROM STRUCTURE

S	SPEAKER
	FLUSH MOUNT SPEAKER
VR	VOLUME CONTROL

TENANT CONTRACTOR TO SUPPLY CONDUIT W/ PULL WIRE BETWEEN SPEAKER LOCATIONS. WITH MAIN RUN TO A/V CABINET. COORDINATE FINAL LOCATIONS WITH AUDIO VENDOR

NOTE: SEE VENDOR DRAWINGS FOR LOCATION AND MOUNTING DETAILS FOR ALL LOW VOLTAGE AUDIO VISUAL, SECURITY AND DATA EQUIPMENT

KEYNOTES

1. NEW SOUND ATTENUATION BLANKETS ABOVE CEILING AT OFFICES
2. LED TAPE LIGHT AT ALL (4) SIDES OF FITTING ROOM MIRROR. REF ELECTRICAL.
3. CONTROL JOINT IN GYP BOARD CEILING
4. CENTER UNI-STRUT GRID ON DATUM LINE
5. UNI-STRUT GRID WITHOUT LIGHT FIXTURE
6. NEW 5/8" TYP X GYPSUM BOARD CEILING PAINTED PER PLAN. INSTALL FULLY CONCEALED WHITE COVER PLATED SPRINKLER HEADS AS REQUIRED.
7. EXHAUST FAN. SEE MECHANICAL DRAWING
8. TENANT CONTRACTOR TO REVIEW LIGHT FIXTURE INSTALL WITH UNI-STRUT GRID PRIOR TO FINALIZING LENGTHS. NOTIFY ARCHITECT OF ANY CONCERNS WITH LAYOUT.

NOTE: PLEASE NOTIFY ARCHITECT OF ANY CEILING PIPING, DUCTS, DRAINS, ETC. UNACOUNTED FOR IN DRAWINGS.

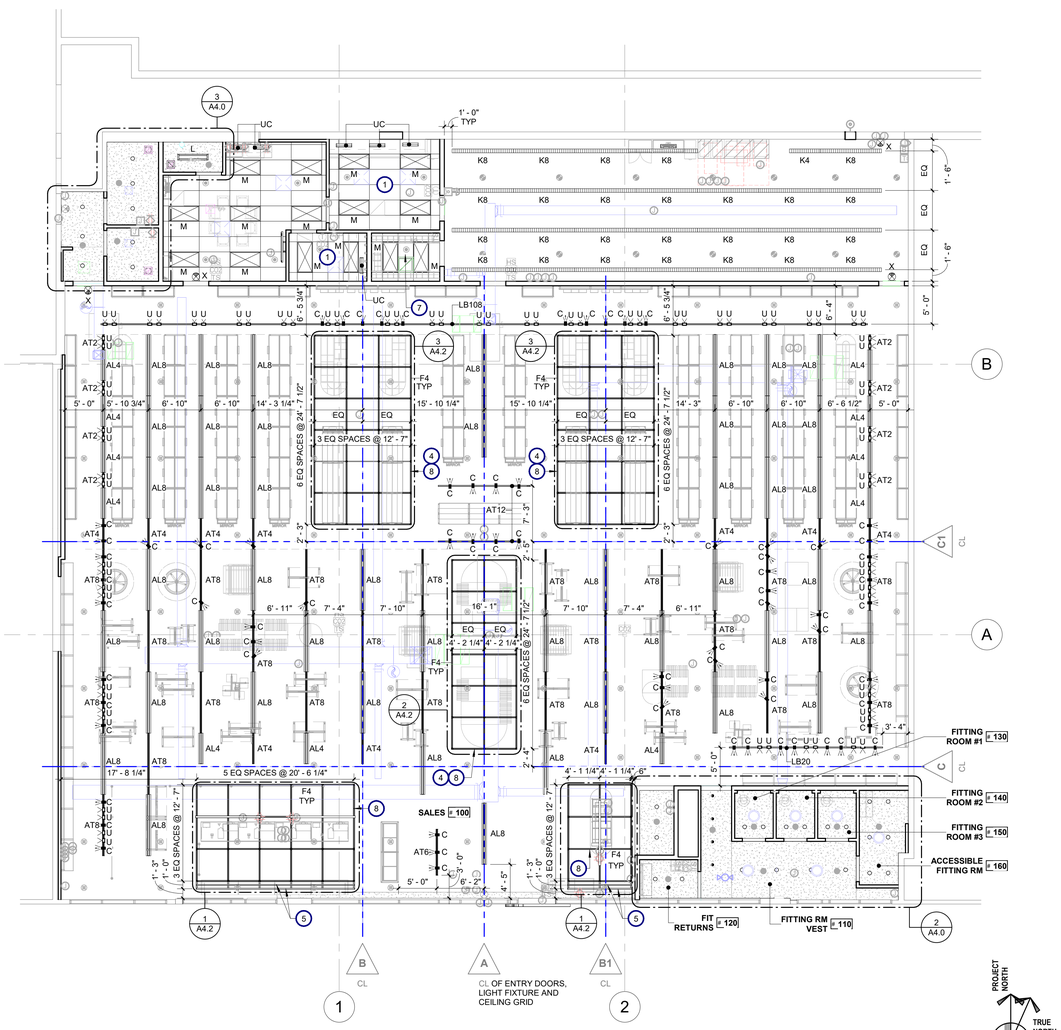

1 REFLECTED CEILING PLAN
1/8" = 1'-0"

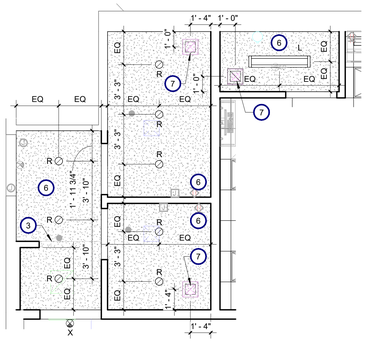

3 ENLARGED REFLECTED CEILING PLAN
1/4" = 1'-0"

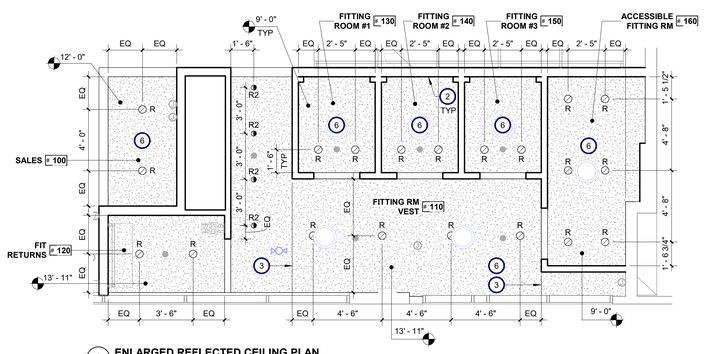

2 ENLARGED REFLECTED CEILING PLAN
1/4" = 1'-0"

Architect:

brr

ARCHITECT OF RECORD:
BRR ARCHITECTURE, INC
8131 METCALF AVE
SUITE 300
OVERLAND PARK, KS 66204

www.brrarch.com

TEL: 913-262-9095
FAX: 913-262-9044

COPYRIGHT NOTICE

This drawing was prepared for use on a specific site contemporaneously with its issue date and it is not suitable for use on a different project site or at a later time. Use of this drawing for another project or on another project requires the services of properly licensed architects and engineers. Reproduction of this drawing for reuse on another project is not authorized and may be contrary to the law.

Engineer:

Project Owner:

NIKE, Inc.
One Bowerman Drive
Beaverton, OR 97005
(503) 671-6453
www.nike.com

Project Address:

NIKE FACTORY STORE
WATERFORD LAKES
SHOPPING CENTER
449 N. ALAFAYA TRAIL
ORLANDO, FL 32828
TEMPLATE ISSUE DATE: 11/28/2018

Fixture Package:
UNITE

Stamp:
NOT FOR CONSTRUCTION

Issued For:
PERMIT/BID

Issue Date:
11/06/2020

Revisions:

NO.	REASON	DATE

PROJECT MANAGER: KH
CHECKED BY:
DRAWN BY: RAN

Project Number:
62301411

Sheet Title:
REFLECTED CEILING PLAN

Sheet Number:
A4.0

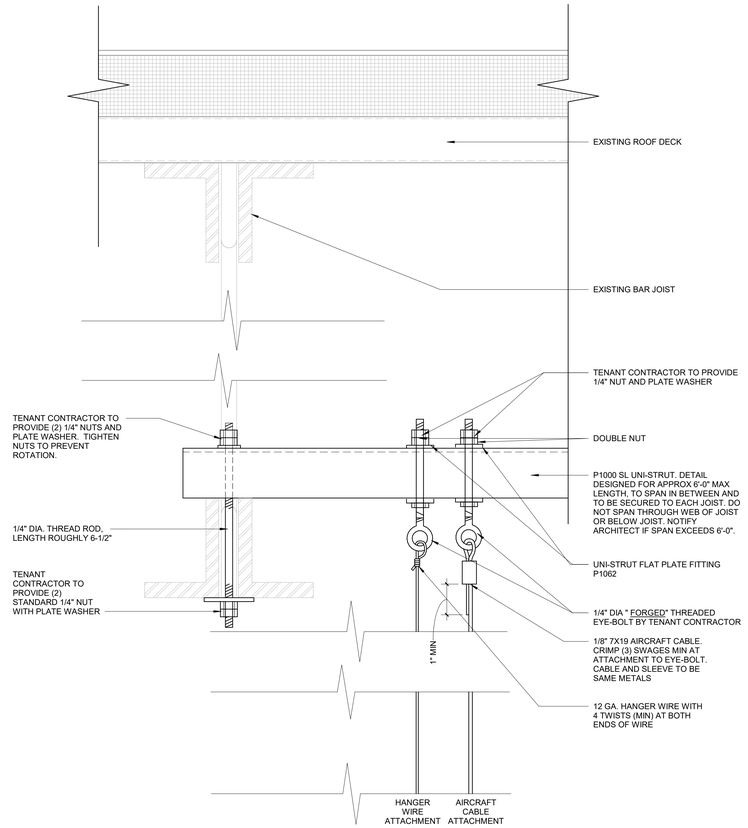

8 **UNI-STRUT GRID ATTACHMENT DETAIL**
6" = 1'-0"

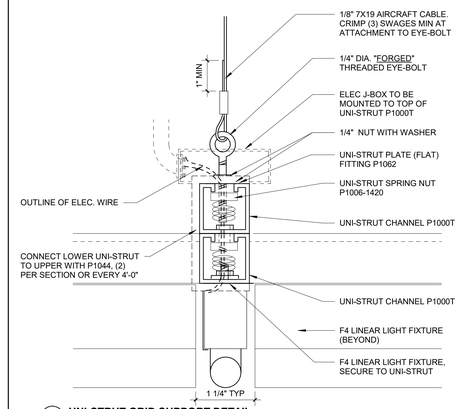

7 **UNI-STRUT GRID SUPPORT DETAIL**
6" = 1'-0"

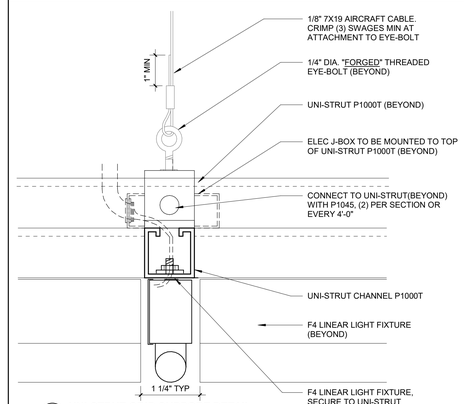

6 **UNI-STRUT GRID SUPPORT DETAIL**
6" = 1'-0"

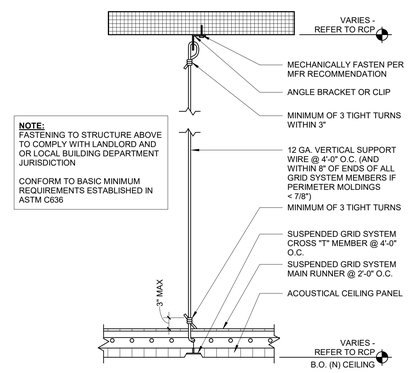

NOTE:
FASTENING TO STRUCTURE ABOVE TO COMPLY WITH LANDLORD AND OR LOCAL BUILDING DEPARTMENT JURISDICTION

CONFORM TO BASIC MINIMUM REQUIREMENTS ESTABLISHED IN ASTM C636

5 **A.C.T. SYSTEM - SEISMIC DESIGN CATEGORIES A, B, & C**
1 1/2" = 1'-0"

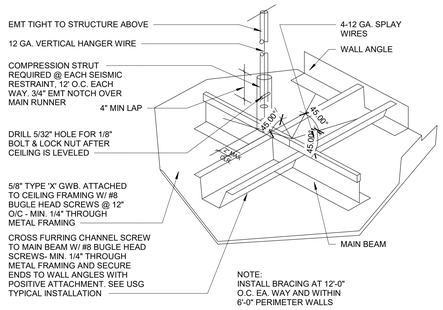

COMPRESSION STRUT DETAIL - GYP BD

SEISMIC DESIGN CATEGORY A, B & C
NOTES
1. ENDS OF MAIN BEAMS AND CROSS TEES MUST BE TIED TOGETHER TO PREVENT THEIR SPREADING. 2. INSTALL CLG. GRID USING #12 GA WIRE HANGERS @ 4' MAX O.C. & 8" MAX FROM PERIMETER WALL. 3. HEAVY DUTY GRID SYSTEM REQUIRED. 4. CEILING AREA > 1000 SQ FT TO HAVE HORIZONTAL RESTRAINT WIRE AND RIGID BRACING. 5. CEILING AREA > 2500 SQ FT TO HAVE SEISMIC SEPARATION JOINTS (3/4" MIN) OR FULL HEIGHT PARTITION. 6. CEILING WITHOUT RIGID BRACING MUST HAVE 2" OVERSIZED TRIM RINGS FOR SPRINKLERS AND OTHER PENETRATIONS. 7. AIR TERMINALS: <20 LBS - POSITIVELY ATTACHED TO GRID 20 TO 56 LBS - POSITIVELY ATTACHED TO GRID AND TWO 12 GA WIRES TO STRUCTURE (MAY BE SLACK) >56 LBS SUPPORTED DIRECTLY TO STRUCTURE BY APPROVED HANGERS
ACT CEILING SUSPENSION SYSTEM

2 **A.C.T. SUSPENSION SYSTEM - SEISMIC DESIGN CATEGORIES A, B, & C**
12" = 1'-0"

VERTICAL STRUTS - ALLOWABLE LENGTHS		
METAL STUDS	SINGLE 1-5/8" MTL STUD (20 GAUGE)	UP TO 12' - 0"
	SINGLE 2-1/2" MTL STUD (20 GAUGE)	UP TO 13' - 6"
	BACK-TO-BACK 1-5/8" MTL STUD (20 GAUGE)	UP TO 15' - 0"
	BACK-TO-BACK 2-1/2" MTL STUD (20 GAUGE)	UP TO 15' - 0"
EMT CONDUIT	1/2" EMT / 3/4" EMT AT BOTTOM SECTION	UP TO 5' - 10"
	3/4" EMT / 1" EMT AT BOTTOM SECTION	UP TO 7' - 8"
	1" EMT / 1-1/4" EMT AT BOTTOM SECTION	UP TO 9' - 0"

NOTE: SEE STRUCTURAL ENGINEER DRAWING AND CALCULATIONS FOR PLENUM AREAS GREATER THAN 15'-0"

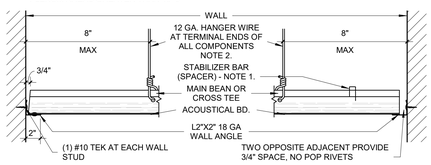

PERIMETER NOTES

1. CONTINUOUS SPACER BAR TO BE LOCKED TO COMPONENTS ON UNATTACHED WALL.
2. COMPONENT TERMINAL ENDS MUST BE SUPPORTED BY A 12 GA. HANGER WIRE ON ALL WALLS.

4 **A.C.T. BRACING & RESTRAINT - SEISMIC DESIGN CATEGORIES A, B, & C**
N.T.S.

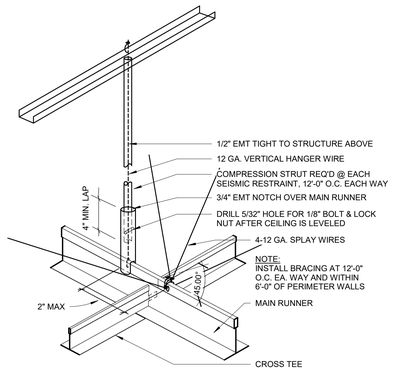

COMPRESSION STRUT DETAIL - ACT CEILING

3 **CEILING COMPRESSION STRUT - SEISMIC DESIGN CATEGORIES A, B, & C**
N.T.S.

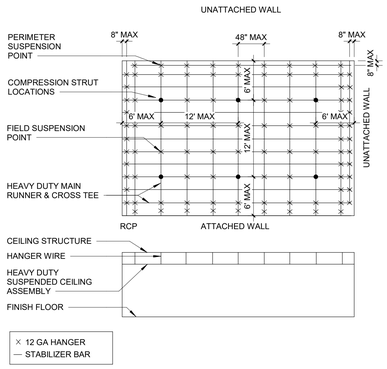

1 **A.C.T. LAYOUT - SEISMIC DESIGN CATEGORIES A, B, & C**
1" = 10'-0"

Architect:

brr

ARCHITECT OF RECORD:
BRR ARCHITECTURE, INC
8131 METCALF AVE
SUITE 300
OVERLAND PARK, KS 66204

www.brrarch.com

TEL: 913-262-9095
FAX: 913-262-9044

COPYRIGHT NOTICE

This drawing was prepared for use on a specific site contemporaneously with its issue date and it is not suitable for use on a different project site or at a later time. Use of this drawing for construction on another project requires the services of properly licensed architects and engineers. Reproduction of this drawing for reuse on another project is not authorized and may be contrary to the law.

Engineer:

Project Owner:

NIKE, Inc.
One Bowerman Drive
Beaverton, OR 97005
(503) 671-6453
www.nike.com

Project Address:

NIKE FACTORY STORE
WATERFORD LAKES
SHOPPING CENTER
449 N. ALAFAYA TRAIL
ORLANDO, FL 32828
TEMPLATE ISSUE DATE: 11/28/2018

Fixture Package:

UNITE

Stamp:

NOT FOR CONSTRUCTION

Issued For:

PERMIT/BID

Issue Date:

11/06/2020

Revisions:

NO.	REASON	DATE

PROJECT MANAGER: KH
CHECKED BY:
DRAWN BY: DB

Project Number:

62301411

Sheet Title:

CEILING DETAILS - SEISMIC CATEGORIES B

Sheet Number:

A4.1

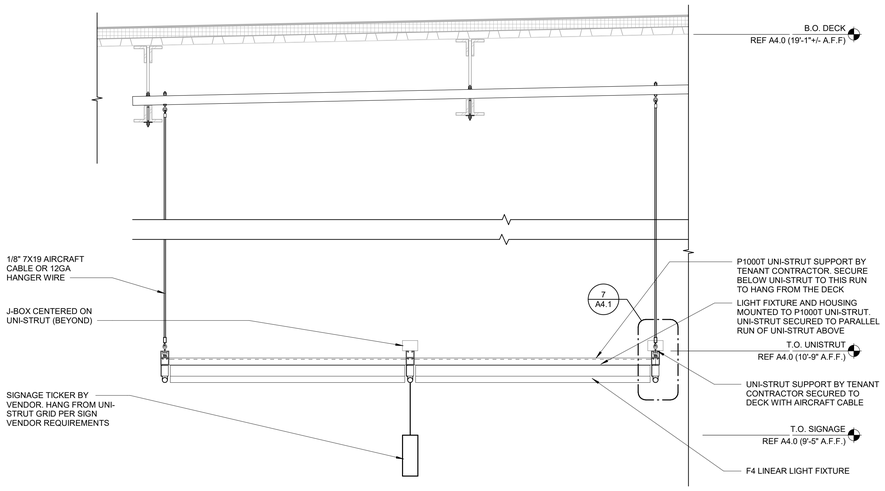

5 **UNI-STRUT GRID SUSPENSION DETAIL**
1" = 1'-0"

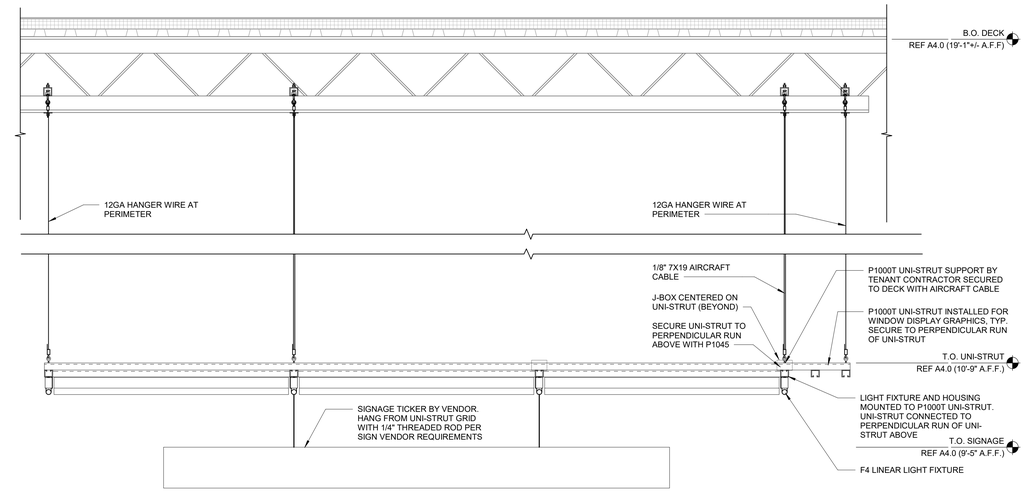

4 **UNI-STRUT GRID SUSPENSION DETAIL**
1" = 1'-0"

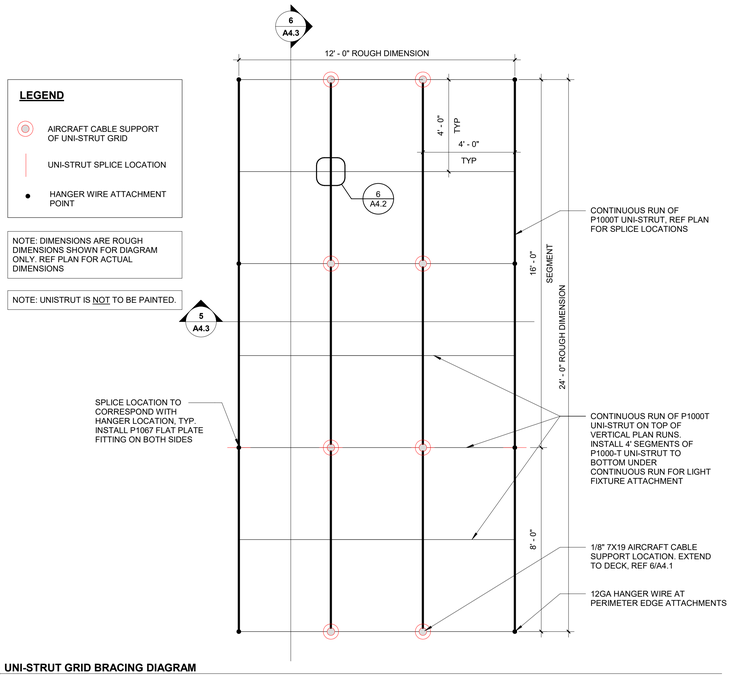

LEGEND

- AIRCRAFT CABLE SUPPORT OF UNI-STRUT GRID
- UNI-STRUT SPLICE LOCATION
- HANGER WIRE ATTACHMENT POINT

NOTE: DIMENSIONS ARE ROUGH DIMENSIONS SHOWN FOR DIAGRAM ONLY. REF PLAN FOR ACTUAL DIMENSIONS

NOTE: UNISTRUT IS NOT TO BE PAINTED.

3 **UNI-STRUT GRID BRACING DIAGRAM**
3/8" = 1'-0"

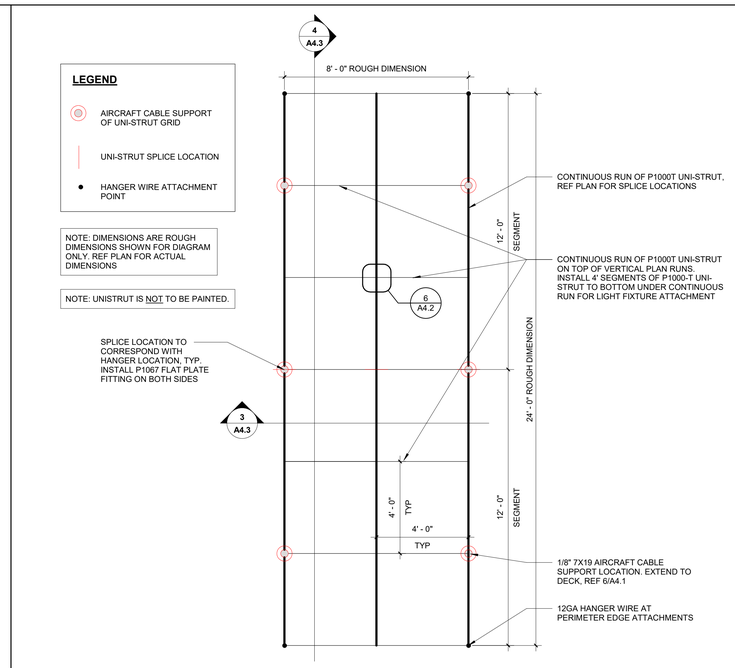

LEGEND

- AIRCRAFT CABLE SUPPORT OF UNI-STRUT GRID
- UNI-STRUT SPLICE LOCATION
- HANGER WIRE ATTACHMENT POINT

NOTE: DIMENSIONS ARE ROUGH DIMENSIONS SHOWN FOR DIAGRAM ONLY. REF PLAN FOR ACTUAL DIMENSIONS

NOTE: UNISTRUT IS NOT TO BE PAINTED.

2 **UNI-STRUT GRID BRACING DIAGRAM**
3/8" = 1'-0"

6 **UNI-STRUT LIGHTING**
1/2" = 1'-0"

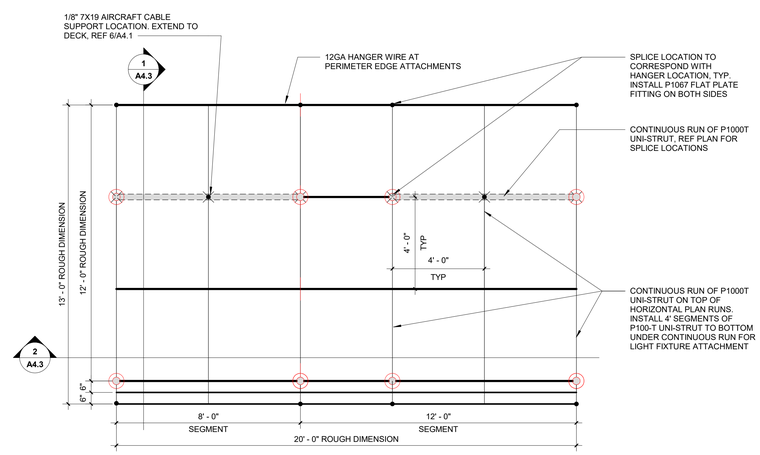

LEGEND

- AIRCRAFT CABLE SUPPORT OF UNI-STRUT GRID
- SIGNAGE TICKER SUPPORT FROM UNI-STRUT GRID
- UNI-STRUT SPLICE LOCATION
- SIGNAGE TICKER
- HANGER WIRE ATTACHMENT POINT

NOTE: DIMENSIONS ARE ROUGH DIMENSIONS SHOWN FOR DIAGRAM ONLY. REF PLAN FOR ACTUAL DIMENSIONS

NOTE: UNISTRUT IS NOT TO BE PAINTED.

1 **UNI-STRUT GRID BRACING DIAGRAM**
3/8" = 1'-0"

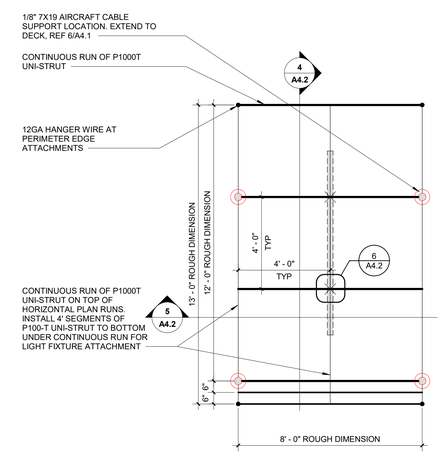

Architect:

brr

ARCHITECT OF RECORD:
BRR ARCHITECTURE, INC
8131 METCALF AVE
SUITE 300
OVERLAND PARK, KS 66204
www.brrarch.com
TEL: 913-262-9095
FAX: 913-262-9044

COPYRIGHT NOTICE
This drawing was prepared for use on a specific site contemporaneously with its issue date and it is not suitable for use on a different project site or at a later time. Use of this drawing for construction on another project requires the services of properly licensed architects and engineers. Reproduction of this drawing for reuse on another project is not authorized and may be contrary to the law.

Engineer:

Project Owner:

NIKE, Inc.
One Bowerman Drive
Beaverton, OR 97005
(503) 671-6453
www.nike.com

Project Address:

NIKE FACTORY STORE
WATERFORD LAKES
SHOPPING CENTER
449 N. ALAFAYA TRAIL
ORLANDO, FL 32828
TEMPLATE ISSUE DATE: 11/28/2018

Fixture Package:
UNITE

Stamp:
NOT FOR CONSTRUCTION

Issued For:
PERMIT/BID

Issue Date:
11/06/2020

Revisions:

NO.	REASON	DATE

PROJECT MANAGER:
KH
CHECKED BY:
DRAWN BY:
RAN

Project Number:
62301411

Sheet Title:
CEILING GRID DIAGRAMS

Sheet Number:
A4.2

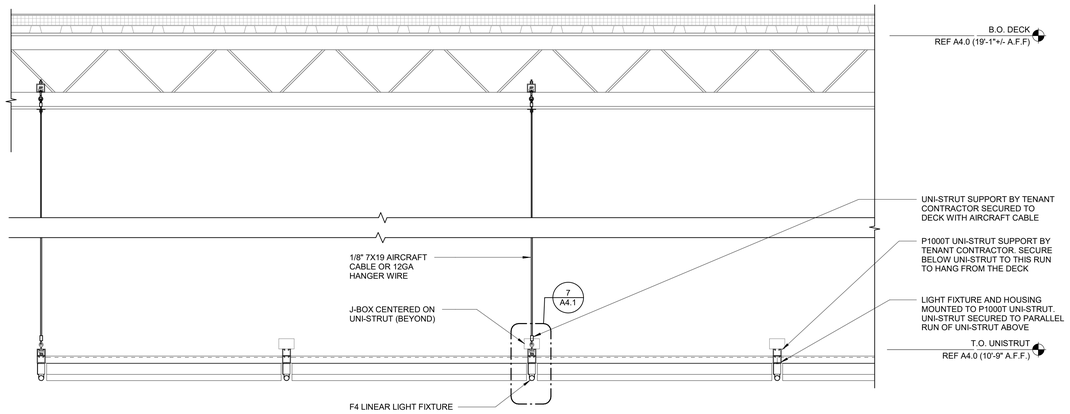

6 UNI-STRUT SECTION DETAIL
1" = 1'-0"

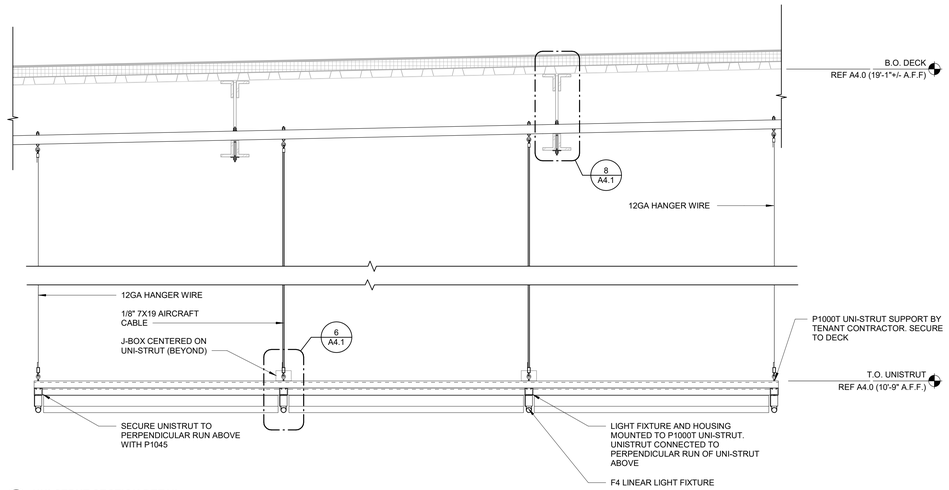

5 UNI-STRUT SECTION DETAIL
1" = 1'-0"

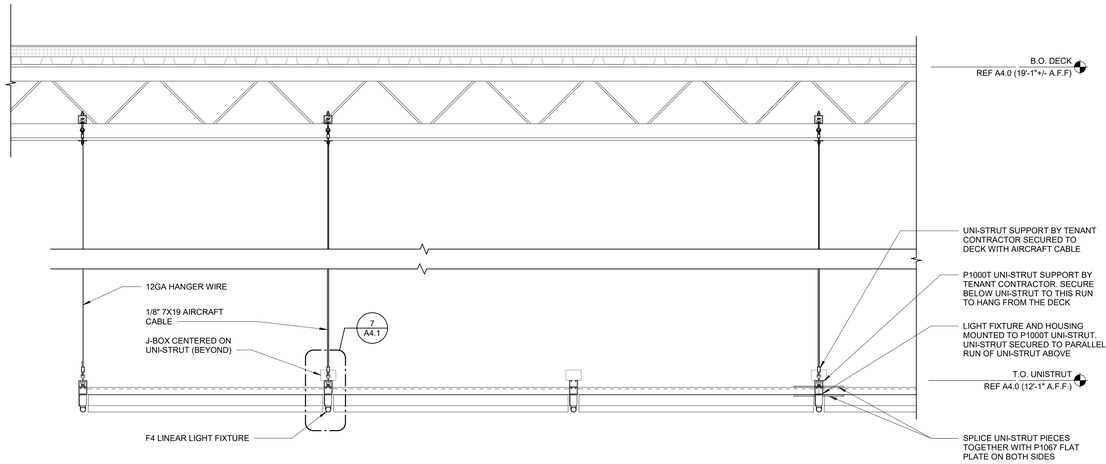

4 UNI-STRUT SECTION DETAIL
1" = 1'-0"

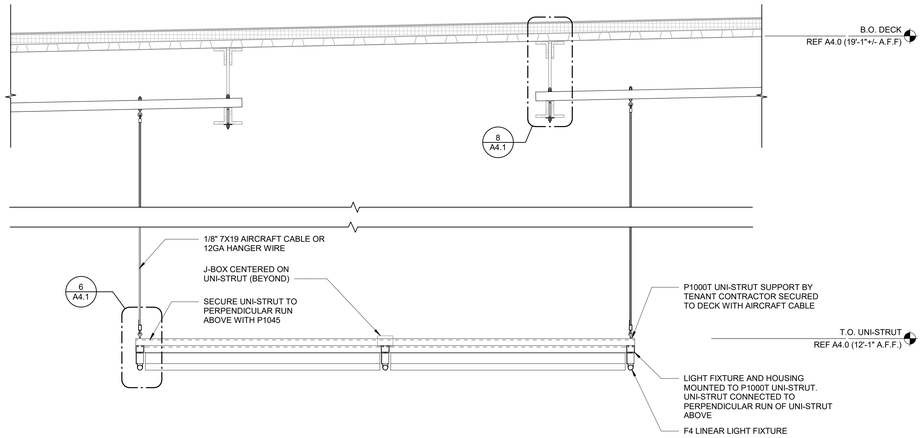

3 UNI-STRUT SECTION DETAIL
1" = 1'-0"

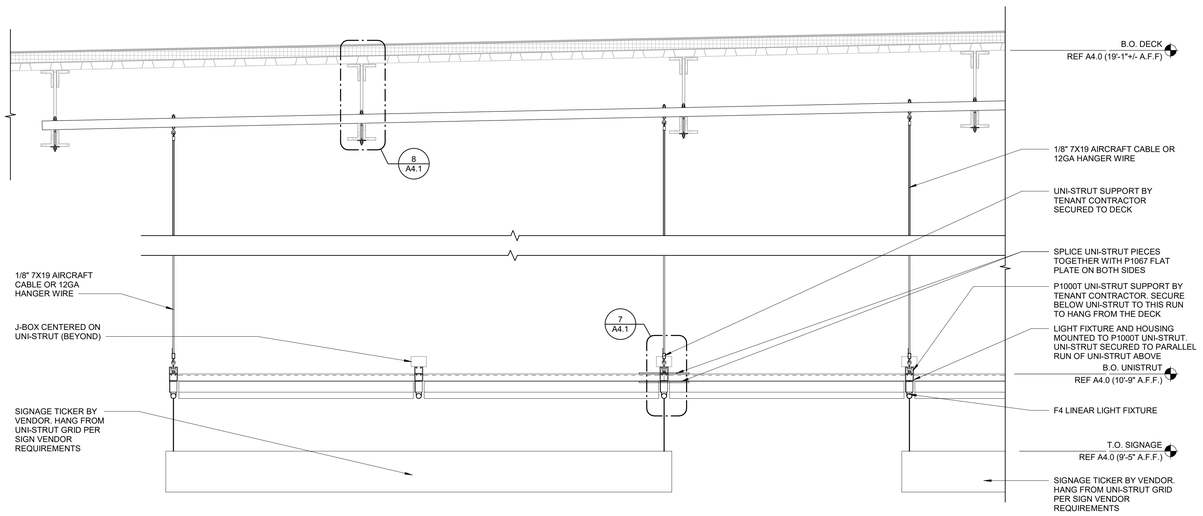

2 UNI-STRUT GRID SUSPENSION DETAIL
1" = 1'-0"

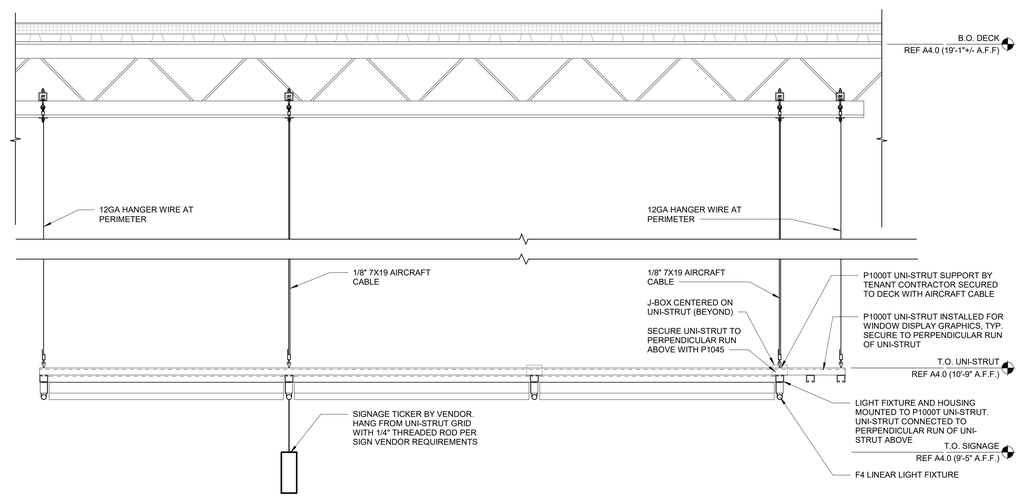

1 UNI-STRUT GRID SUSPENSION DETAIL
1" = 1'-0"

Architect:

brr

ARCHITECT OF RECORD:
BRR ARCHITECTURE, INC
8131 METCALF AVE
SUITE 300
OVERLAND PARK, KS 66204

www.brrarch.com

TEL: 913-262-9095
FAX: 913-262-9044

COPYRIGHT NOTICE

This drawing was prepared for use on a specific site contemporaneously with its issue date and it is not suitable for use on a different project site or at a later time. Use of this drawing for reuse on another project or another project requires the services of properly licensed architects and engineers. Reproduction of this drawing for reuse on another project is not authorized and may be contrary to the law.

Engineer:

Project Owner:

NIKE, Inc.
One Bowerman Drive
Beaverton, OR 97005
(503) 671-6453
www.nike.com

Project Address:

NIKE FACTORY STORE
WATERFORD LAKES
SHOPPING CENTER
449 N. ALAFAYA TRAIL
ORLANDO, FL 32828
TEMPLATE ISSUE DATE: 11/28/2018

Fixture Package:

UNITE

Stamp:

NOT FOR CONSTRUCTION

Issued For:

PERMIT/BID

Issue Date:

11/06/2020

Revisions:

NO.	REASON	DATE

PROJECT MANAGER:
KH
CHECKED BY:
DRAWN BY:
RAN

Project Number:

62301411

Sheet Title:

CEILING GRID DETAILS

Sheet Number:

A4.3

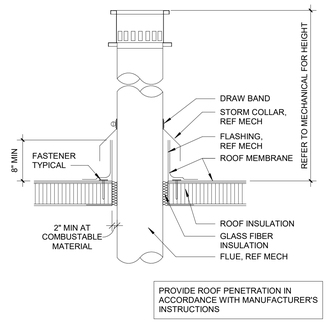

3 **FLUE PENETRATION**
1" = 1'-0"

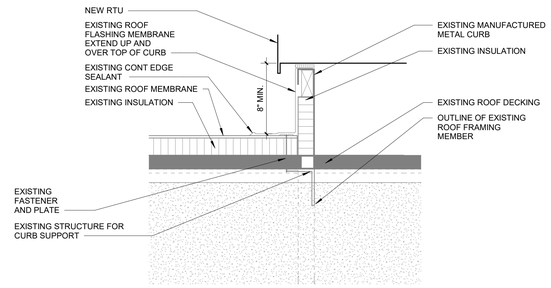

2 **ROOF TOP UNIT**
1 1/2" = 1'-0"

SHEET NOTES

A. REFER TO MEP DRAWINGS FOR ADDITIONAL INFORMATION

B. ALL EXISTING CONDITIONS MUST BE FIELD VERIFIED. CONTRACTOR TO NOTIFY NIKE CPM AND ARCHITECT IF ANY DISCREPANCIES EXIST.

C. TENANT CONTRACTOR RESPONSIBLE FOR PROTECTION OF ROOF FOR ALL ROOF WORK.

D. TENANT CONTRACTOR RESPONSIBLE FOR ROOF CLEANUP AFTER ROOF WORK IS COMPLETE

KEYNOTES

1. NOT USED
2. NEW RTU AT EXISTING RTU LOCATION WITH NEW CURB ADAPTER FROM NEW UNIT TO EXISTING CURB. EXISTING RTU TO BE REMOVED. REFERENCE MECHANICAL DRAWINGS FOR INFORMATOIN ON NEW RTU AND CURB ADAPTERS.
3. NEW RTU AT EXISTING CURB. TENANT CONTRACTOR TO PROVIDE ROOF PENETRATION FOR DUCT DROP PENETRATIONS AND INSTALLING ROOF CRICKETS AS NEEDED FOR PROPER ROOF DRAINAGE BEFORE ALL NEW ROOF MEMEBRANE IS PATCHED AROUND EXISTING RTU CURB.
4. INSTALL ROOF CRICKET AS NEEDED TO PROVIDE POSITIVE SLOPE AT NEW RTU LOCATION.
5. NEW EXHAUST FAN AND CURB LOCATION. TENANT CONTRACTOR TO PROVIDE NEW CURB ADAPTER FOR DUCT DROP PENETRATIONS AND INSTALLING ROOF CRICKETS AS NEEDED FOR PROPER ROOF DRAINAGE BEFORE ALL NEW ROOF MEMBRANE IS PATCHED AROUND NEW EXHAUST FAN CURB.

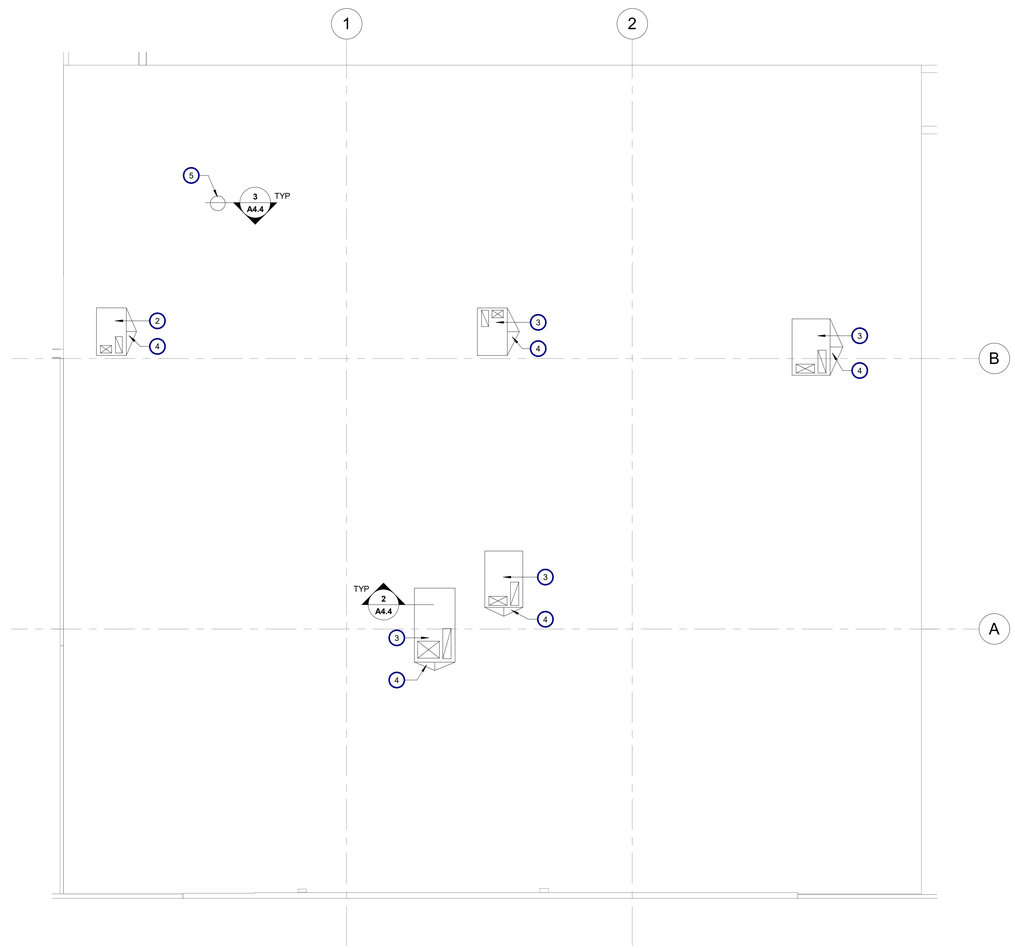

1 **ROOF PLAN**
1/8" = 1'-0"

Architect:

brr

ARCHITECT OF RECORD:
BRR ARCHITECTURE, INC
8131 METCALF AVE
SUITE 300
OVERLAND PARK, KS 66204

www.brrarch.com

TEL: 913-262-9095
FAX: 913-262-9044

COPYRIGHT NOTICE

This drawing was prepared for use on a specific site contemporaneously with its issue date and it is not suitable for use on a different project site or at a later time. Use of this drawing for construction on another project requires the services of properly licensed architects and engineers. Reproduction of this drawing for reuse on another project is not authorized and may be contrary to the law.

Engineer:

Project Owner:

NIKE, Inc.
One Bowerman Drive
Beaverton, OR 97005
(503) 671-6453
www.nike.com

Project Address:

NIKE FACTORY STORE
WATERFORD LAKES
SHOPPING CENTER
449 N. ALAFAYA TRAIL
ORLANDO, FL 32828
TEMPLATE ISSUE DATE: 11/28/2018

Fixture Package:
UNITE

Stamp:
NOT FOR CONSTRUCTION

Issued For:
PERMIT/BID

Issue Date:
11/06/2020

Revisions:

NO.	REASON	DATE

PROJECT MANAGER:
KH
CHECKED BY:
DRAWN BY:
RAN

Project Number:
62301411

Sheet Title:
ROOF PLAN AND DETAILS

Sheet Number:
A4.4

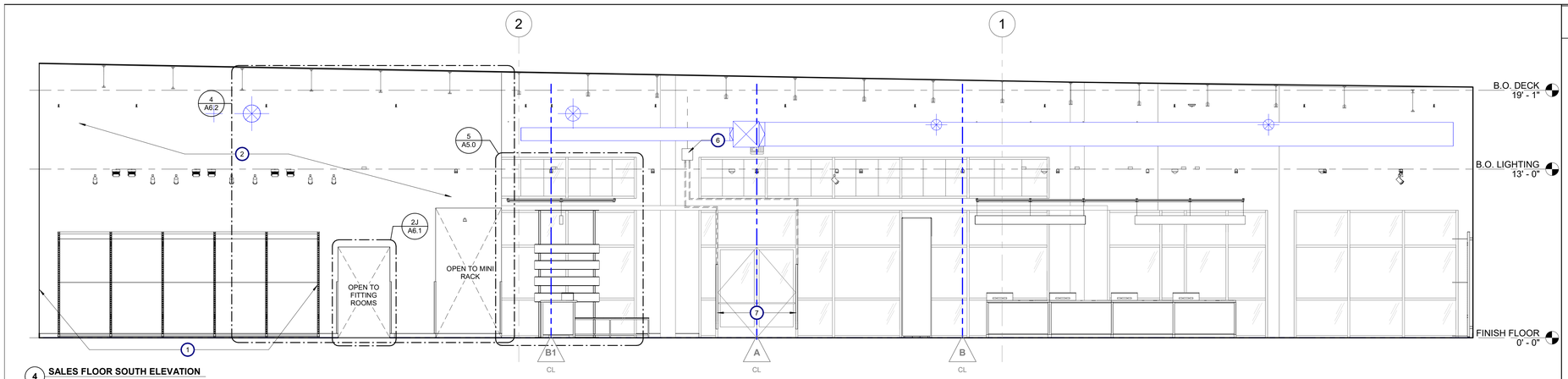

4 **SALES FLOOR SOUTH ELEVATION**
1/4" = 1'-0"

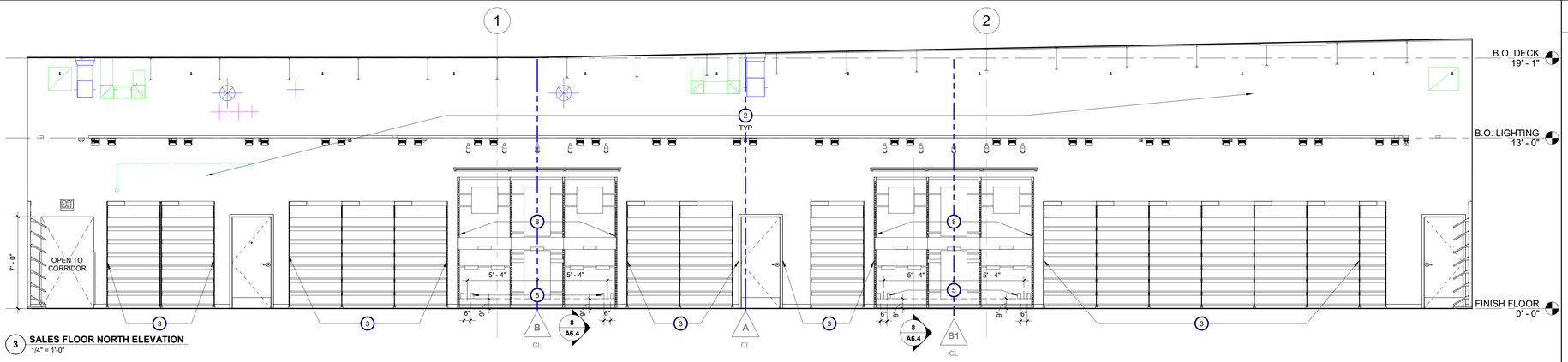

3 **SALES FLOOR NORTH ELEVATION**
1/4" = 1'-0"

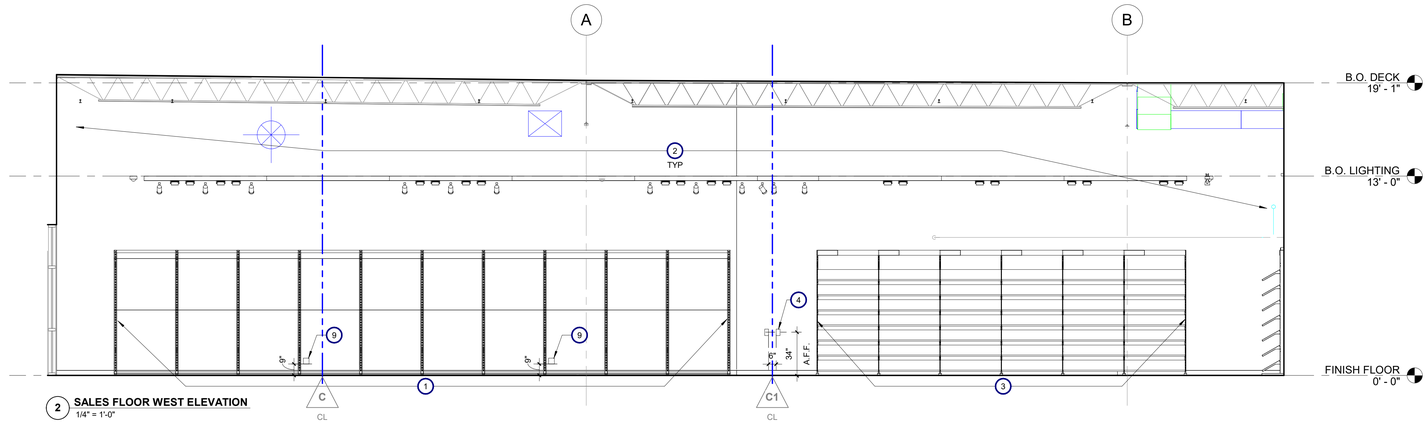

2 **SALES FLOOR WEST ELEVATION**
1/4" = 1'-0"

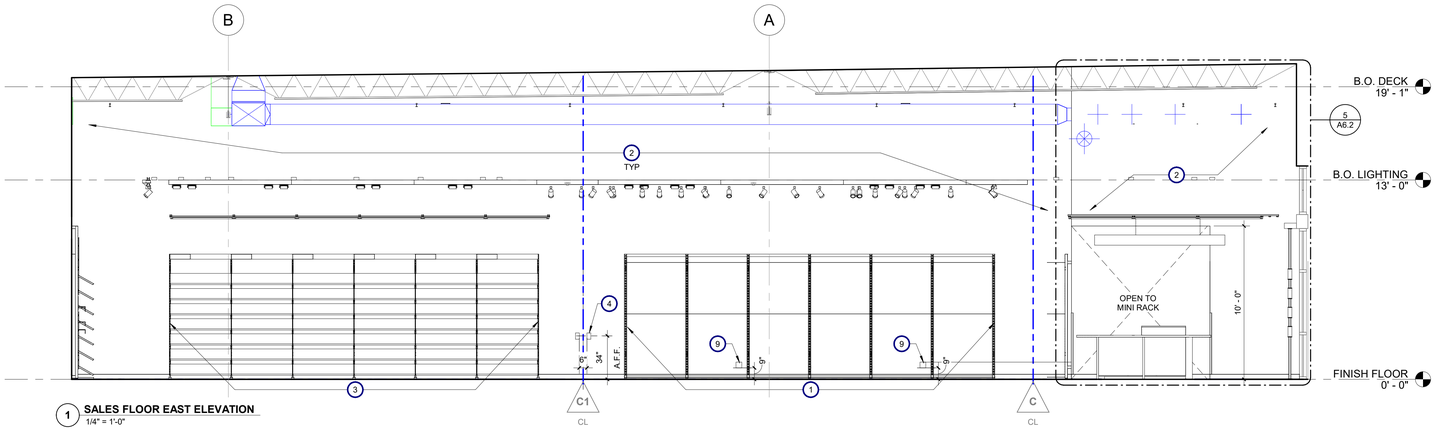

1 **SALES FLOOR EAST ELEVATION**
1/4" = 1'-0"

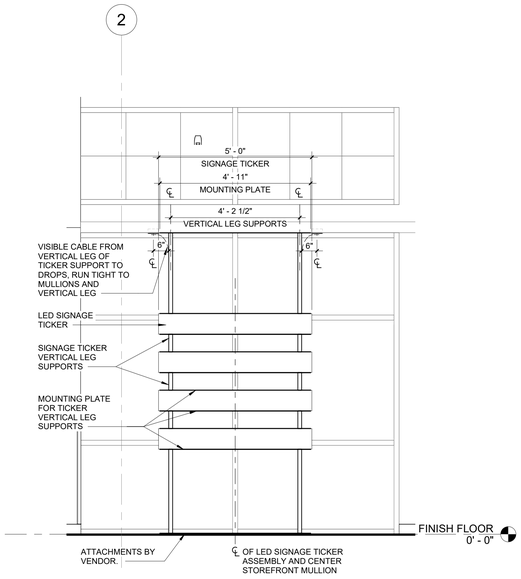

5 **SIGNAGE TICKER ENLARGED VIEW**
1/2" = 1'-0"

SHEET NOTES

A. VERIFY ALL MECHANICAL DUCT HEIGHT WITH ENGINEER DRAWING PRIOR TO INSTALLATION. NOTIFY ARCHITECT IF HEIGHT IS LOWER THAN 12'-6" AFF.

B. SPRINKLER LINE TO BE MOUNTED AS CLOSE TO THE BOTTOM OF ROOF DECK. COORDINATE WITH LANDLORD REQUIRED SPRINKLER VENDOR FOR INSTALLATION. SEE LANDLORD REQUIRED VENDOR CONTACT INFO ON SHEET CS1.0.

C. ESTABLISH HIGHPOINT ON PERIMETER WALLS BEFORE ANY WORK BEGINS

KEYNOTES

1. 8" METAL RUNNER CHANNEL FOR PERIMETER WALL FIXTURE BACKING. SEE DETAIL 15/A6.4 9/A6.4
2. GRAPHIC BY VENDOR. TENANT CONTRACTOR TO PROVIDE A LEVEL 4 FINISH.
3. 6" METAL RUNNER CHANNEL FOR PERIMETER WALL FIXTURE BACKING. SEE DETAIL 4/A6.4 10/A6.4
4. INSTALL POWER AND DATA OUTPUTS. CENTER THE OUTPUTS WITH CONSTRUCTION LINE AND 6" AWAY FROM EACH OTHER. SEE ELECTRICAL DRAWING AND ELEVATION FOR MORE INFORMATION.
5. PROVIDE POWER AND DATA OUTLETS PER THE ELECTRICAL PLANS BEHIND THE FOOTWEAR INITIATIVE WALL. SEE A5.0 SALES ELEVATIONS AND ELECTRICAL DRAWING FOR MORE INFORMATION.
6. POWER/CONTROLLER BOX FOR SENSORMATIC DOOR MAX.
7. SENSORMATIC DIGITAL DOOR MAX SECURITY PANEL. ALL CONDUIT CONNECT BETWEEN SECURITY PANELS AND POWER CONTROLLER BOX TO BE CONCEALED WITHIN THE STOREFRONT MULLION OR WITHIN WALL, REF 4 / A7.0
8. 8" METAL RUNNER CHANNEL FOR FOOTWEAR INITIATIVE FIXTURE BACKING. SEE DETAIL 15/A6.4 8/A6.4
9. INSTALL POWER QUADPLEX OUTPUTS @ 9" A.F.F., TYP. SEE ELECTRICAL DRAWING AND ELEVATION FOR MORE INFORMATION.

Architect:

brr

ARCHITECT OF RECORD:
BRR ARCHITECTURE, INC
8131 METCALF AVE
SUITE 300
OVERLAND PARK, KS 66204

www.brrarch.com

TEL: 913-262-9095
FAX: 913-262-9044

COPYRIGHT NOTICE

This drawing was prepared for use on a specific site contemporaneously with its issue date and it is not suitable for use on a different project site or at a later time. Use of this drawing for construction on another project requires the services of properly licensed architects and engineers. Reproduction of this drawing for reuse on another project is not authorized and may be contrary to the law.

Engineer:

Project Owner:

NIKE, Inc.
One Bowerman Drive
Beaverton, OR 97005
(503) 671-6453
www.nike.com

Project Address:

NIKE FACTORY STORE
WATERFORD LAKES
SHOPPING CENTER
449 N. ALAFAYA TRAIL
ORLANDO, FL 32828
TEMPLATE ISSUE DATE: 11/28/2018

Fixture Package:
UNITE

Stamp:
NOT FOR CONSTRUCTION

Issued For:
PERMIT/BID

Issue Date:
11/06/2020

Revisions:

NO.	REASON	DATE

PROJECT MANAGER:
KH
CHECKED BY:
DRAWN BY:
RAN

Project Number:
62301411

Sheet Title:
SALES ELEVATIONS

Sheet Number:
A5.0

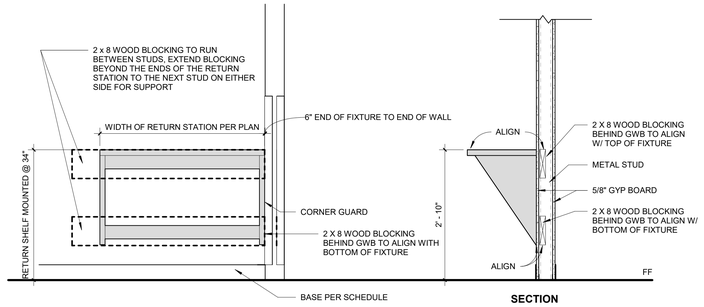

6 RETURN STATION MOUNTING DETAILS - FULL WALL
3/4" = 1'-0"

KEYNOTES

1. 2" x 2" x 4'-0" BRUSHED ST STL CORNER GUARD W/ CLEAR CAULKING BY BURNS MANUFACTURING, INC. (814)833-7428. TYPICAL FOR EVERY EXPOSED GWB CORNER.
2. BACKERBOARD & HOOKS IN FITTING ROOMS. TENANT CONTRACTOR PROVIDE BLOCKING FOR SUPPORT.
3. FITTING ROOM DOOR. MIN. CLEAR WIDTH OF ACCESSIBLE DOOR TO BE 36".
4. ADA SIGNAGE. SEE SHEET CS4.0 FOR REQUIREMENTS
5. PRE-FAB STANDARD FITTING ROOM BENCH
6. PRE-FAB ADA FITTING ROOM BENCH 24" W x 48" D. PROVIDE 30" CLEARANCE SPACE BESIDE BENCH FOR ADA CLEARANCE.
7. NEW MIRROR BY TENANT CONTRACTOR, REF 5/A6.1
8. RETURN FIXTURE BY FIXTURE VENDOR WITH 2X BLOCKING SEE DETAIL 15/A6.4
9. RETURN STATION WITH 2X BLOCKING. SEE DETAIL 6/A6.1
10. DIMMER SWITCH LOCATION, REF ELECTRICAL.
11. GRAPHIC BY VENDOR. TENANT CONTRACTOR PROVIDE A LEVEL 4 FINISH
12. GRAPHICS ON GLAZING BY VENDOR
13. LED TAPE LIGHT AT ALL (4) SIDES OF FITTING ROOM MIRROR. REF ELECTRICAL.

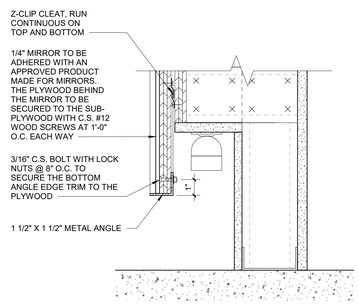

5 MIRROR ATTACHMENT DETAIL
3" = 1'-0"

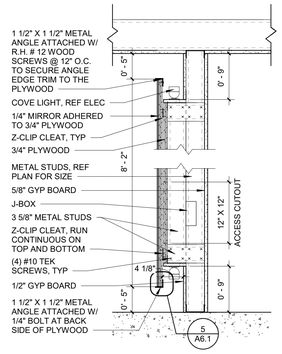

4 ADA FITTING ROOM MIRROR SECTION
1" = 1'-0"

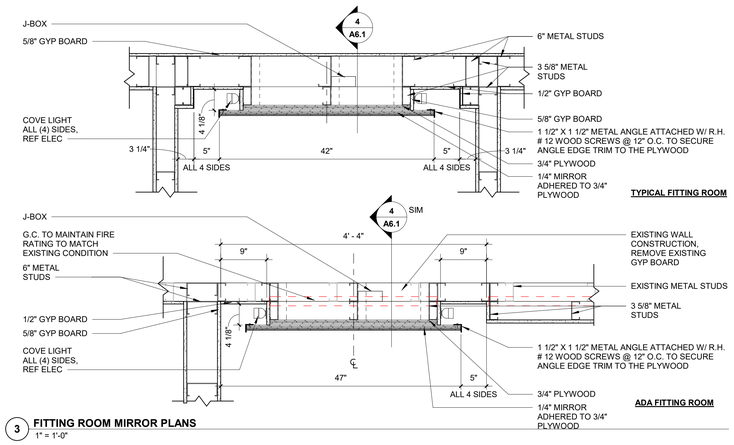

3 FITTING ROOM MIRROR PLANS
1" = 1'-0"

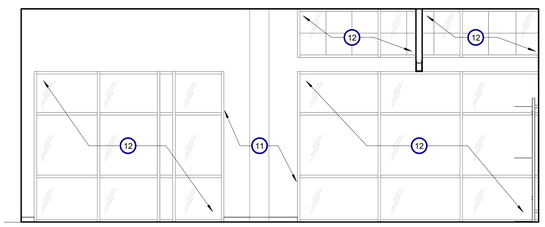

2N FIT ROOM VESTIBULE SOUTH ELEVATION
1/4" = 1'-0"

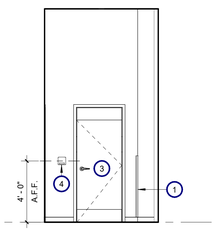

2M FIT ROOM VESTIBULE EAST ELEVATION
1/4" = 1'-0"

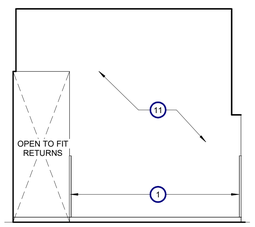

2L FIT ROOM VESTIBULE WEST ELEVATION
1/4" = 1'-0"

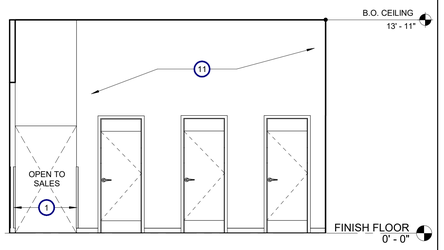

2K FIT ROOM VESTIBULE NORTH ELEVATION
1/4" = 1'-0"

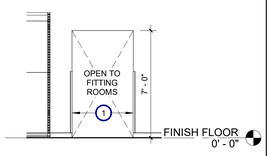

2J FIT ROOM ENTRY
1/4" = 1'-0"

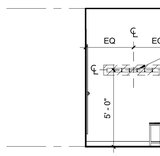

2H TYPICAL FIT ROOM WEST ELEVATION
1/4" = 1'-0"

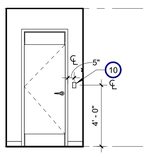

2G TYPICAL FIT ROOM SOUTH ELEVATION
1/4" = 1'-0"

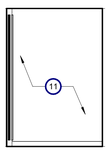

2F TYPICAL FIT ROOM EAST ELEVATION
1/4" = 1'-0"

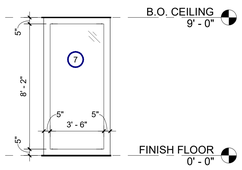

2E TYPICAL FIT ROOM NORTH ELEVATION
1/4" = 1'-0"

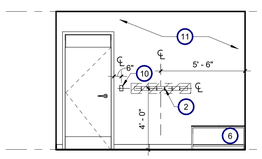

2D A.D.A. FIT ROOM WEST ELEVATION
1/4" = 1'-0"

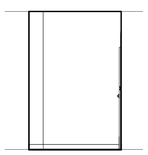

2C A.D.A. FIT ROOM SOUTH ELEVATION
1/4" = 1'-0"

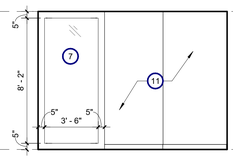

2B A.D.A. FIT ROOM EAST ELEVATION
1/4" = 1'-0"

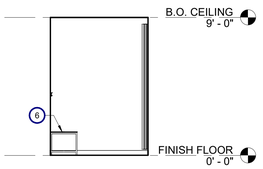

2A A.D.A. FIT ROOM NORTH ELEVATION
1/4" = 1'-0"

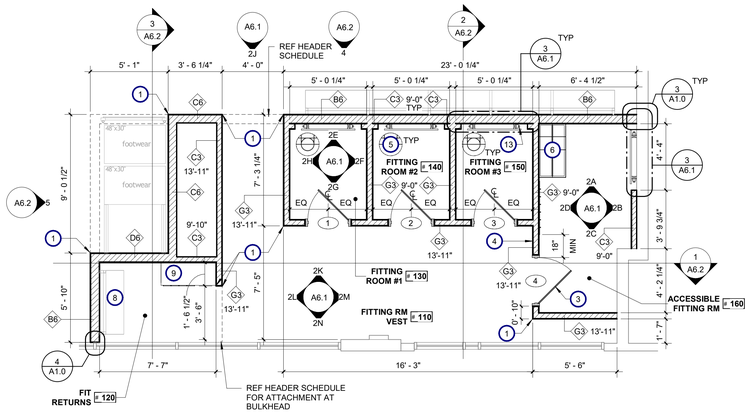

1 FIT ROOM ENLARGED PLAN
1/4" = 1'-0"

Architect:

brr

ARCHITECT OF RECORD:
BRR ARCHITECTURE, INC
8131 METCALF AVE
SUITE 300
OVERLAND PARK, KS 66204

www.brrarch.com

TEL: 913-262-9095
FAX: 913-262-9044

COPYRIGHT NOTICE

This drawing was prepared for use on a specific site contemporaneously with its issue date and it is not suitable for use on a different project site or at a later time. Use of this drawing on another project without an another project requires the services of properly licensed architects and engineers. Reproduction of this drawing for reuse on another project is not authorized and may be contrary to the law.

Engineer:

Project Owner:

NIKE, Inc.
One Bowerman Drive
Beaverton, OR 97005
(503) 671-6453
www.nike.com

Project Address:

NIKE FACTORY STORE
WATERFORD LAKES
SHOPPING CENTER
449 N. ALAFAYA TRAIL
ORLANDO, FL 32828
TEMPLATE ISSUE DATE: 11/28/2018

Fixture Package:
UNITE

Stamp:
NOT FOR CONSTRUCTION

Issued For:
PERMIT/BID

Issue Date:
11/06/2020

Revisions:

NO.	REASON	DATE

PROJECT MANAGER:
KH
CHECKED BY:
DRAWN BY:
DB

Project Number:
62301411

Sheet Title:
FITTING ROOM ENLARGED VIEWS

Sheet Number:
A6.1

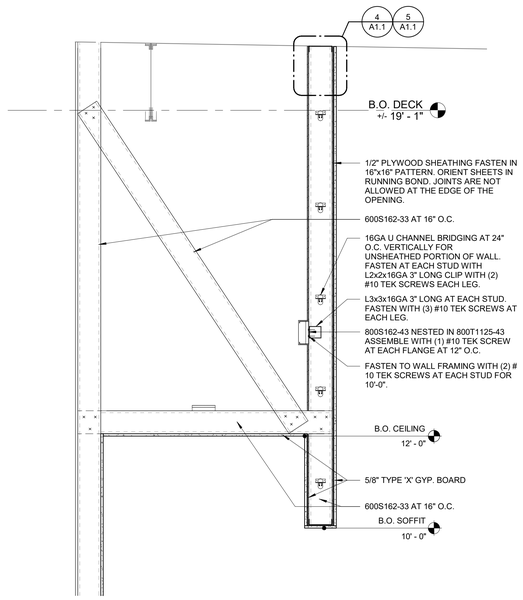

8 **MINI RACK HEADER DETAIL**
3/4" = 1'-0"

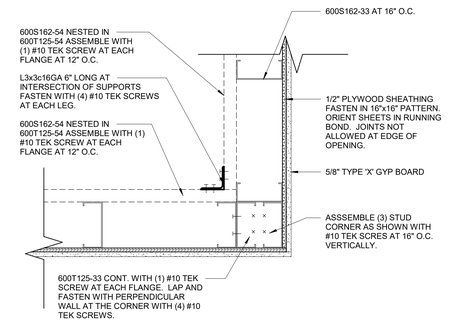

7 **FRAMING DETAIL**
1 1/2" = 1'-0"

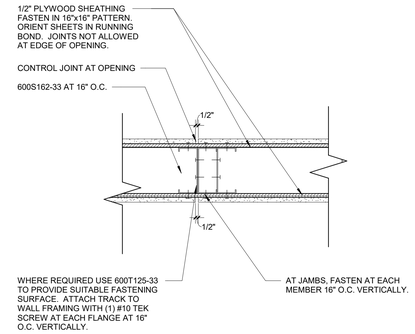

6 **FRAMING SECTION**
1 1/2" = 1'-0"

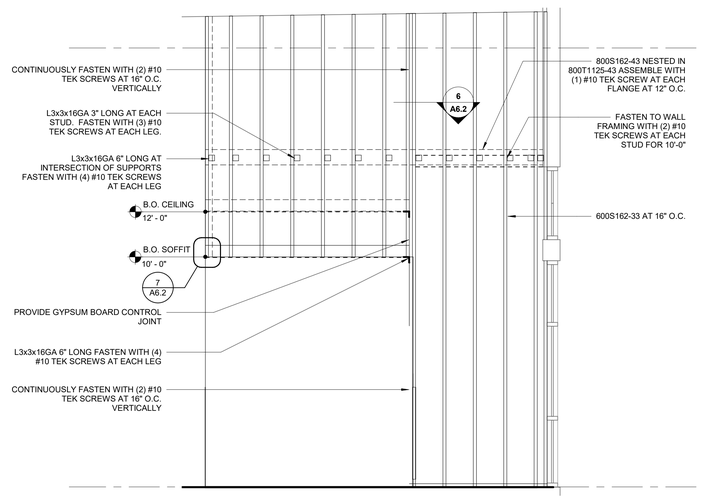

5 **SECTION @ SERVICE HUB1**
3/8" = 1'-0"

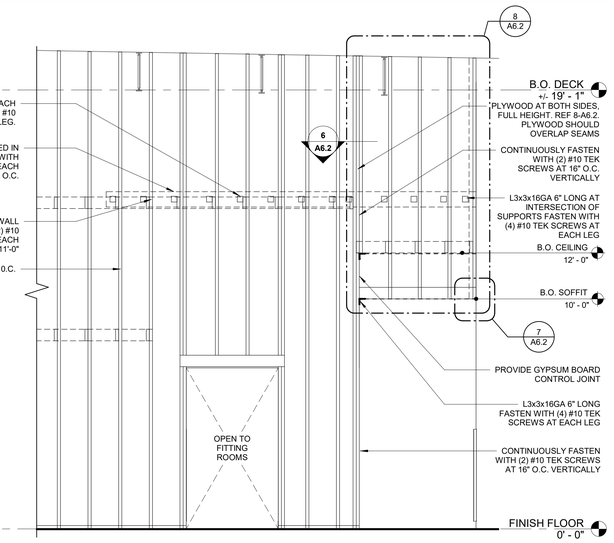

4 **SECTION @ FITTING ROOM VESTIBULE1**
3/8" = 1'-0"

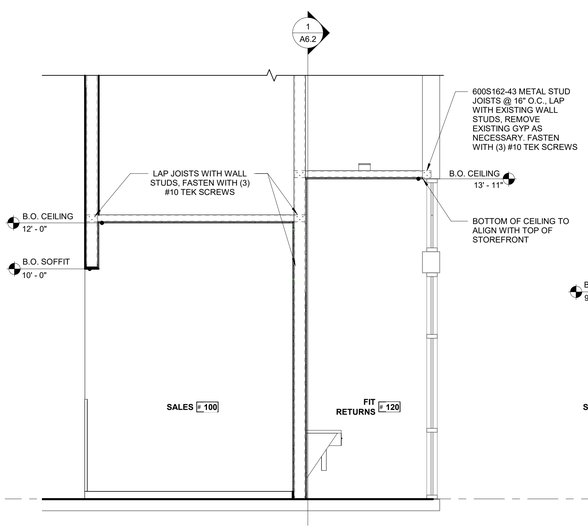

3 **SECTION @ SERVICE HUB**
3/8" = 1'-0"

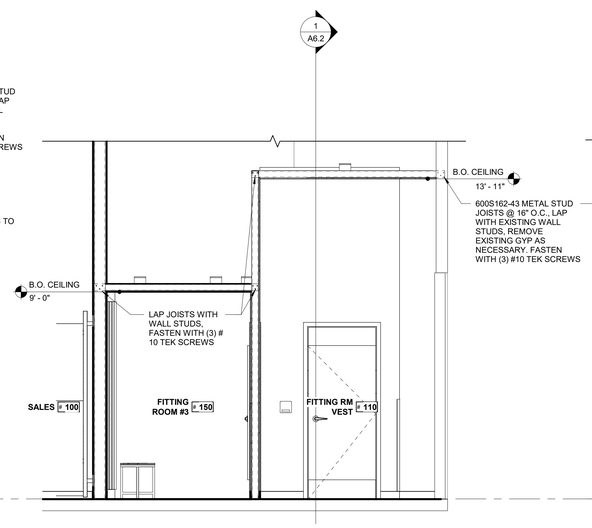

2 **SECTION @ FITTING ROOM**
3/8" = 1'-0"

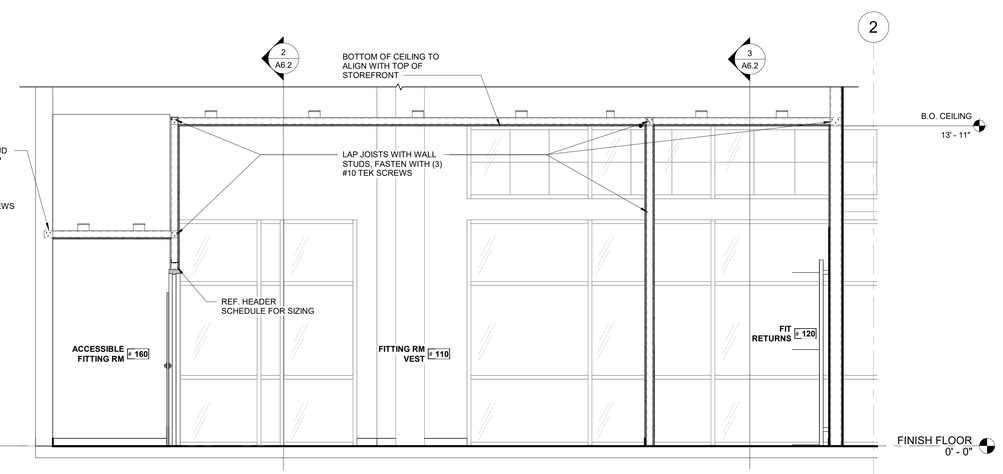

1 **SECTION @ FITTING ROOM VESTIBULE**
3/8" = 1'-0"

Architect:

brr

ARCHITECT OF RECORD:
BRR ARCHITECTURE, INC
8131 METCALF AVE
SUITE 300
OVERLAND PARK, KS 66204

www.brrarch.com

TEL: 913-262-9095
FAX: 913-262-9044

COPYRIGHT NOTICE

This drawing was prepared for use on a specific site contemporaneously with its issue date and it is not suitable for use on a different project site or at a later time. Use of this drawing for construction on another project requires the services of properly licensed architects and engineers. Reproduction of this drawing for reuse on another project is not authorized and may be contrary to the law.

Engineer:

Project Owner:

NIKE, Inc.
One Bowerman Drive
Beaverton, OR 97005
(503) 671-6453
www.nike.com

Project Address:

NIKE FACTORY STORE
WATERFORD LAKES
SHOPPING CENTER
449 N. ALAFAYA TRAIL
ORLANDO, FL 32828
TEMPLATE ISSUE DATE: 11/28/2018

Fixture Package:
UNITE

Stamp:
NOT FOR CONSTRUCTION

Issued For:
PERMIT/BID

Issue Date:
11/06/2020

Revisions:

NO.	REASON	DATE

PROJECT MANAGER:
KH
CHECKED BY:
DRAWN BY:
DB

Project Number:
62301411

Sheet Title:
FITTING ROOM ENLARGED VIEWS

Sheet Number:
A6.2

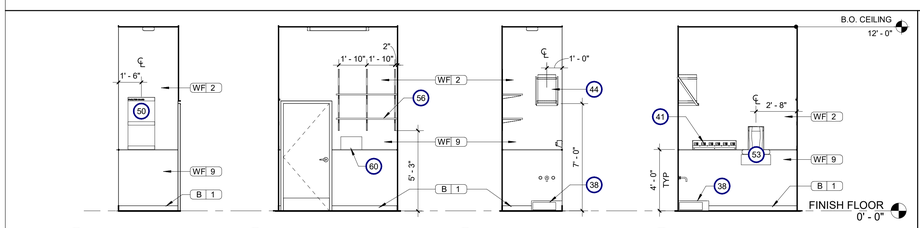

5D JANITOR CLOSET EAST 1/4" = 1'-0"

5C JANITOR CLOSET SOUTH 1/4" = 1'-0"

5B JANITOR CLOSET WEST 1/4" = 1'-0"

5A JANITOR CLOSET NORTH 1/4" = 1'-0"

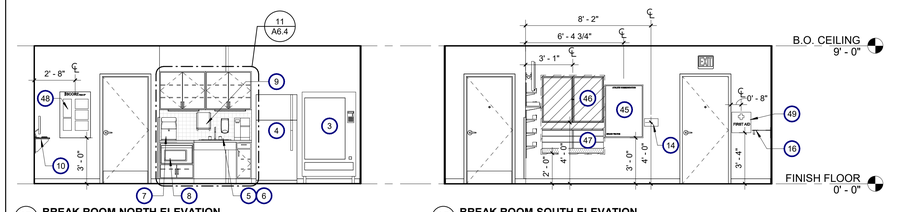

1D BREAK ROOM NORTH ELEVATION 1/4" = 1'-0"

1C BREAK ROOM SOUTH ELEVATION 1/4" = 1'-0"

NOTE: ADJUST GROUT LINES AS REQUIRED TO ELIMINATE CUT TILES

NOTE: RESTROOM SHALL COMPLY WITH ADA REQUIREMENT. SEE SHEET CS4.0 FOR NOTE AND DETAIL

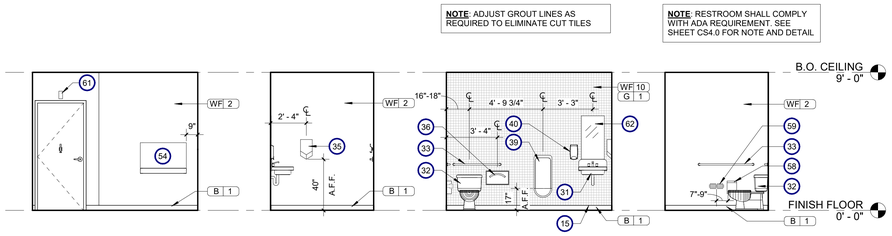

4D RESTROOM WEST ELEVATION 1/4" = 1'-0"

4C RESTROOM SOUTH ELEVATION 1/4" = 1'-0"

4B RESTROOM EAST ELEVATION 1/4" = 1'-0"

4A RESTROOM NORTH ELEVATION 1/4" = 1'-0"

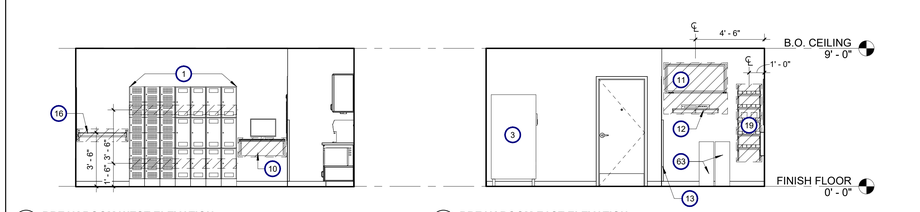

1B BREAK ROOM WEST ELEVATION 1/4" = 1'-0"

1A BREAK ROOM EAST ELEVATION 1/4" = 1'-0"

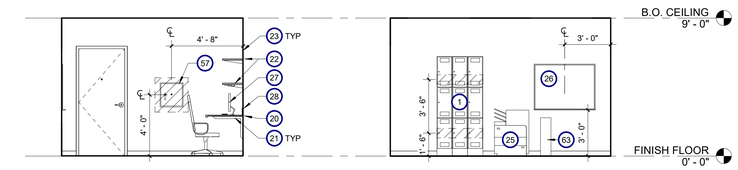

3D ASST MANAGER WEST ELEVATION 1/4" = 1'-0"

3C ASST MANAGER SOUTH ELEVATION 1/4" = 1'-0"

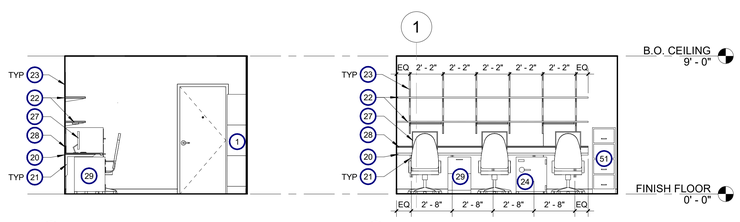

3B ASST MANAGER EAST ELEVATION 1/4" = 1'-0"

3A ASST MANAGER NORTH ELEVATION 1/4" = 1'-0"

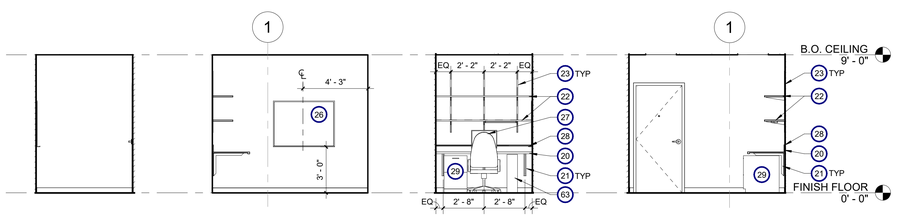

2D MANAGER WEST ELEVATION 1/4" = 1'-0"

2C MANAGER SOUTH ELEVATION 1/4" = 1'-0"

2B MANAGER EAST ELEVATION 1/4" = 1'-0"

2A MANAGER NORTH ELEVATION 1/4" = 1'-0"

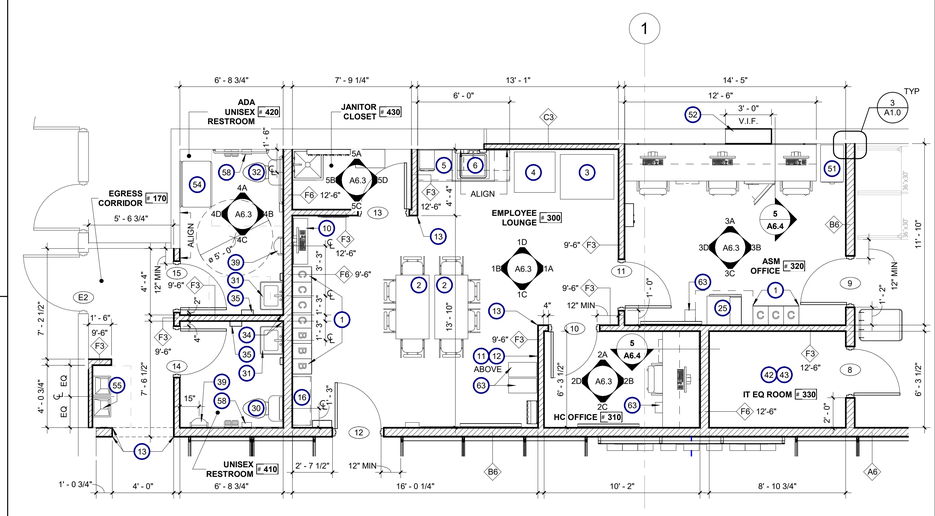

1 BACK OF HOUSE ENLARGED PLAN 1/4" = 1'-0"

SHEET NOTES

A. TENANT CONTRACTOR TO PROVIDE 8 HOURS OF WORK AT CLOSE OUT TO INSTALL NIKE KIT TRUCK ITEMS. KIT TRUCK ITEMS MAY INCLUDE: SCHEDULE BOARD, COMMUNICATION BOARD, LP COMMUNICATION BOARD, FIRST AID KIT AND SHARPS CONTAINER, COAT RACK, STORE BONUS BOARD, FACILITIES BOARD, MVP POSTER AND BALLOT BOX. TENANT CONTRACTOR TO COORDINATE WITH NIKE OPERATION TO CONFIRM ITEM LOCATIONS.

B. REFER TO RESPONSIBILITY MATRIX FOR LIST OF OWNER PROVIDED ITEMS

C. TENANT CONTRACTOR TO PROVIDE MOISTURE RESISTANT GYPSUM BOARD AT ALL WET WALLS.

KEYNOTES

1. LOCKERS. 5% OF LOCKERS (OR A MINIMUM OF ONE) TO BE HANDICAP ACCESSIBLE. LOCKERS TO BE SECURELY ANCHORED TO THE BACK WALL. PROVIDE 6" METAL BACKING PLATE BEHIND GYPSUM BOARD WHERE ANCHOR LOCATED.
2. FURNITURE BY OWNER
3. VENDING MACHINE. SEE ELECTRICAL DRAWING FOR REQUIRED POWER OUTLET.
4. FULL SIZE REFRIGERATOR. SEE ELECTRICAL DRAWING FOR REQUIRED POWER OUTLET.
5. EMPLOYEE LOUNGE SINK COUNTER AND CABINET ABOVE, SEE DETAIL 11/A6.4
6. STAINLESS STEEL SINK WITH COMMERCIAL FAUCET AND INSULATED PIPES. SEE PLUMBING DRAWING FOR SPECIFICATION AND DETAIL.
7. COUNTERTOP WATER DISPENSER. SEE PLUMBING DRAWING
8. MICROWAVE. SEE ELECTRICAL DRAWING FOR POWER OUTLET
9. PAPER TOWEL DISPENSER, BOBRICK B-262 SURFACE MOUNTED STAINLESS STEEL WITH KEY. REF RESPONSIBILITY MATRIX.
10. PC SHELF. 3/4" MDF WITH NEVAMAR PLASTIC LAMINATED; COLOR BLACK #S6001T. ADD PLUGMOLD ABOVE COUNTER BACK SPLASH. SEE DETAIL 2/A6.4
11. WALL MOUNTED TELEVISION. REFER TO RESPONSIBILITY MATRIX.
12. TV EQUIPMENT WALL MOUNTED SHELF. SEE DETAIL 3/A6.4
13. 2" x 2" x 4'-0" BRUSHED ST STL CORNER GUARD W/ CLEAR CAULKING BY BURNS MANUFACTURING, INC. (614)833-7428. TYPICAL FOR EVERY EXPOSED GWB CORNER.
14. WALL MOUNTED EMPLOYEE TIME CLOCK. SEE ELECTRICAL DRAWING FOR REQUIRED DATA OUTLET. INSTALL DATA OUTLET DIRECTLY BELOW TIMECLOCK.
15. SCHLUTER JOLLY ANODIZED ALUMINUM AT TILE EDGE.
16. COAT RACK. INSTALL BLOCKING BETWEEN STUDS FOR BACKING.
17. NOT USED
18. NOT USED
19. SHELVES FOR RADIO DOCKING. INSTALL BLOCKING BETWEEN STUDS FOR BACKING. SEE DETAIL 1/A6.4
20. 3/4" MDF WORK COUNTER, 30" WIDE TYP. 1/2" RADIUS BULLNOSE EDGE . 4" BACK SPLASH. PLASTIC LAMINATED NEVAMAR (GREENGUARD-CERTIFIED) FINISH, COLOR WHITE #S7004T.
21. RAKKS EH-SURFACE MOUNT COUNTER SUPPORT BRACKET, MODEL #EH-1824, PRIMED AND READY FOR PAINT. PAINT TO MATCH WALL COLOR. SPACING SHOULD NOT EXCEED 32" O.C.
22. 3/4" MDF SHELVES, 15 1/4" DEEP W/ SQUARE EDGES. PLASTIC LAMINATED NEVAMAR (GREENGUARD-CERTIFIED) FINISH, COLOR WHITE #S7004T.
23. 36" TALL SHELF STANDARD, 26" O.C. APART. CAPITOL HARDWARE HEAVY DUTY "C" LINE SURFACE MOUNTED STDS W/ 1" SLOTS @ 2" O.C. PROVIDE #2061 HD KNIFE BRACKETS AND CLIPS. TENANT CONTRACTOR TO PROVIDE BLOCKING AS REQUIRED.
24. 30" TALL SAFE. SECURE ANCHORED EITHER TO THE ADJACENT WALL OR FLOOR BELOW. REFER TO RESPONSIBILITY MATRIX.
25. COPIER. REFER TO RESPONSIBILITY MATRIX, AND ELECTRICAL DRAWING FOR REQUIRED POWER/DATA OUTLET.
26. 48" X 36" WHITE BOARD OR CORK BOARD. REFER TO RESPONSIBILITY MATRIX.
27. COMPUTER. REFER TO RESPONSIBILITY MATRIX.
28. WHITE DESK PLUG MOLD ABOVE COUNTER BACK SPLASH 20GB609. SEE ELECTRICAL DRAWING FOR REMODEL ELECTRICAL WORK SCOPE.
29. 30" TALL FILE CABINET, REFER TO RESPONSIBILITY MATRIX
30. TOILET
31. WALL HUNG LAVATORY WITH METERING FAUCET AND INSULATED PIPE. SEE SHEET CS4.0 FOR ACCESSIBILITY COMPLIANCE
32. ACCESSIBLE TOILET. SEE SHEET CS4.0 FOR ACCESSIBILITY COMPLIANCE
33. GRAB BARS: BOBRICK B-5806 SERIES MTD AT 36" AFF. TENANT CONTRACTOR TO PROVIDE BLOCKING. SEE SHEET CS4.0 FOR ACCESSIBILITY COMPLIANCE
34. SHARP OBJECT CONTAINER, KENDALL/COVIDIEN SHARPS CONTAINER, 1 QUART WITH CLEAR LID, #SR1Q100900. INSTALL WITH UNIMED-MIDWEST, INC. #SWBR100912 WALL NON-LOCKING BRACKET. IN MULTI-OCCUPANT RESTROOMS, INSTALL CONTAINER WITH LOCK. REF RESPONSIBILITY MATRIX.
35. SURFACE MOUNTED DYSON AIRBLADE V HU02 SPRAYED NICKEL. NOZZLE OF HAND DRYER TO BE LOCATED 40" A.F.F.
36. SURFACE MOUNTED TOILET SEAT COVER DISPENSER, BOBRICK B-4221 CONTURA SERIES SURFACE MOUNTED STAINLESS STEEL. REF RESPONSIBILITY MATRIX.
37. NOT USED
38. UTILITY MOP SINK & SERVICE FAUCET. CAULK ALL EDGES. SEE PLUMBING DRAWING FOR SPECIFICATION AND DETAIL.
39. URINAL, REF PLUMBING DRAWINGS
40. SOAP DISPENSER MOUNTED AT 48" AFF MAX, GOJO FMX-12 PUSH-STYLE DISPENSER IN WHITE, #5150-06. REF RESPONSIBILITY MATRIX.
41. MOP AND BROOM TOOLS HOLDER. EX-CELL WHITE GLOSS #3336WHT2. INSTALL 6" METAL STRAPPING BEHIND DRYWALL FOR BACKING. REF RESPONSIBILITY MATRIX.
42. INSTALL 3/4" FRT PLYWOOD FULL HEIGHT ON ALL WALLS IN IT EQUIMENT ROOM
43. AV RACK. TENANT CONTRACTOR TO COORDINATE WITH DATA VENDOR FOR DATA CONDUIT RECONNECTION AND LOW VOLTAGE POWER OUTLET.
44. WATER HEATER. SEE PLUMBING DRAWING (IF APPLICABLE) FOR REMODEL PLUMBING SCOPE OTHERWISE WATER HEATER WILL BE EXISTING TO REMAIN AS-IS. SEE DETAIL 6/A6.4
45. 30" x 40" COMMUNICATION BOARD. INSTALL BLOCKING BETWEEN STUDS FOR BACKING.
46. 3' x 4' SCHEDULE BOARD. INSTALL BLOCKING BETWEEN STUDS FOR BACKING.
47. LOCK AND LANYARD HOLDER PROVIDED BY FIXTURE VENDOR. INSTALL BLOCKING BETWEEN STUDS FOR BACKING.
48. LP BOARD, REFER TO RESPONSIBILITY MATRIX
49. FIRST AID KIT, INDUSTRIAL ANSI/OSHA FIRST AID KIT FOR 100 PEOPLE. REF RESPONSIBILITY MATRIX.
50. FACILITIES BOARD PLACED OPPOSITE WALL OF MOP SINK.
51. FOUR DRAWER FILE CABINET, REFER TO RESPONSIBILITY MATRIX
52. TENANT CONTRACTOR TO INFILL WALL TO MATCH EXISTING FIRE RATING, MATERIALS AND FINISHES
53. BACKPACK VACUUM
54. SURFACE MOUNTED BABY CHANGING STATION, KOALA KB110-SSWM, PROVIDED AND INSTALLED BY TENANT CONTRACTOR. SEE DETAIL 17/A6.4
55. ACCESSIBLE WALL MOUNT WATER COOLER. REF PLUMBING DRAWINGS FOR MORE INFORMATION AND SEE SHEET CS4.0 FOR ACCESSIBILITY COMPLIANCE. TENANT CONTRACTOR TO PROVIDE AND INSTALL BLOCKING.
56. 3/4" MDF SHELVES 8" DEEP, MOUNTED TO 36" TALL SHELF STANDARD. CAPITOL HARDWARE HEAVY DUTY "C" LINE SURFACE MOUNTED STUDS AND CLIPS. TENANT CONTRACTOR TO PROVIDE BLOCKING AS REQUIRED.
57. KEY BOX. TENANT CONTRACTOR TO PROVIDE PLYWOOD BACKING
58. SANITARY NAPKIN DISPOSAL, BOBRICK B-270 CONTURA SERIES SURFACE MOUNTED STAINLESS STEEL. REF RESPONSIBILITY MATRIX.
59. TOILET PAPER DISPENSER, K-C PROFESSIONAL STAINLESS STEEL CORELSSS DOUBLE ROLL WITH PUSH BUTTON, #09606. REF RESPONSIBILITY MATRIX.
60. GLOVE DISPENSER. SAN JAMAR G0804 WHITE 3 BOX. INSTALL HORIZONTALLY ABOVE FRP. REF RESPONSIBILITY MATRIX.
61. AIR FRESHENER, TCELL #1793546 BLACK. INSTALL ABOVE DOOR. REF RESPONSIBILITY MATRIX.
62. 18"X34" WALL MIRROR W/ J-MOLD BRUSHED NICKEL FRAMED ALL 4 SIDES W/MITERED CORNERS. MIRROR TO BE INSTALLED CENTERED OVER SINK.
63. RECYCLE CONTAINERS PROVIDED BY NIKE AND INSTALLED BY CITY WASTE MANAGEMENT DEPARTMENT. SMALL ORGANICS (WHERE AVAILABLE), 23 GAL MIXED PAPER, 23 GAL PLASTIC, AND 23 GAL METAL RECYCLE CONTAINERS IN BREAKROOM. SMALL 13 QT MIXED PAPER BINS IN OFFICES.

Architect:

brr

ARCHITECT OF RECORD:
BRR ARCHITECTURE, INC
8131 METCALF AVE
SUITE 300
OVERLAND PARK, KS 66204

www.brrarch.com

TEL: 913-262-9095
FAX: 913-262-9044

COPYRIGHT NOTICE

This drawing was prepared for use on a specific site contemporaneously with its issue date and it is not suitable for use on a different project site or at a later time. Use of this drawing for construction on another project requires the services of properly licensed architects and engineers. Reproduction of this drawing for reuse on another project is not authorized and may be contrary to the law.

Engineer:

Project Owner:

NIKE, Inc.
One Bowerman Drive
Beaverton, OR 97005
(503) 671-6453
www.nike.com

Project Address:

NIKE FACTORY STORE
WATERFORD LAKES
SHOPPING CENTER
449 N. ALAFAYA TRAIL
ORLANDO, FL 32828
TEMPLATE ISSUE DATE: 11/28/2018

Fixture Package:

UNITE

Stamp:

NOT FOR CONSTRUCTION

Issued For:

PERMIT/BID

Issue Date:

11/06/2020

Revisions:

NO.	REASON	DATE

PROJECT MANAGER: KH
CHECKED BY:
DRAWN BY: DB

Project Number:

62301411

Sheet Title:

BACK OF HOUSE ENLARGED VIEWS

Sheet Number:

A6.3

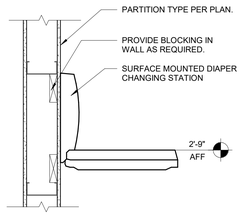

17 WALL AT DIAPER STATION (SURFACE)
1" = 1'-0"

INTERIOR NON-LOAD BEARING PARTITION HEADER SCHEDULE			
HEADER LENGTH	HEADER MEMBERS	HEADER TRACKS	JAMB STUDS
UP TO 4'-0"	(2) C3 5/8 x 1 1/4" x 20 GA	(2) C3 5/8 x 1 1/2" x 20 GA	(2) C3 5/8 x 1 1/4" x 20 GA
UP TO 10'-0"	(2) C6 x 1 5/8" x 18 GA	(2) C6 x 18 GA	(2) C6 x 1 5/8" x 18 GA
14'-0"	(2) C8 x 1 5/8" x 18 GA	(2) C8 x 18 GA	(2) C8 x 1 5/8" x 18 GA
18'-0"	(2) C8 x 1 5/8" x 16 GA	(2) C8 x 16 GA	(2) C8 x 1 5/8" x 16 GA
20'-0"	(2) C10 x 1 5/8" x 16 GA	(2) C10 x 16 GA	(2) C10 x 1 5/8" x 16 GA
24'-0"	(2) C12 x 1 5/8" x 16 GA	(2) C12 x 16 GA	(2) C12 x 1 5/8" x 16 GA

NOTES:

1. MAX WALL HEIGHT ABOVE HEADER ASSEMBLY IS 14'-9".
2. SPLICING OF HEADER AND JAMB MEMBERS IS NOT PERMITTED.
3. MAX SPAN FOR OPENINGS TO RECEIVE INFILL BELOW THE HEADER IS 19'-0"
4. JAMBS NOT TO DECK ARE TO BE BRACED IN ACCORDANCE WITH THE PARTITION OF BRACING DETAILS. 3 5/8" JAMBS BEYOND 13'-4" ARE TO BE BRACED ABOVE THE OPENING AND SUCH THAT THE MAXIMUM UNBRACED LENTH IS NOT EXCEEDED.
5. FRAMING MEMBERS ARE NOT SIZED FOR VERTICAL LOAD OTHER THAN THAT OF THE PORTION OF WALL ABOVE THE OPENING.

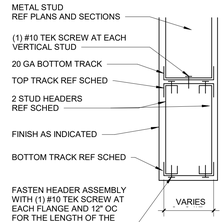

SECTION-A

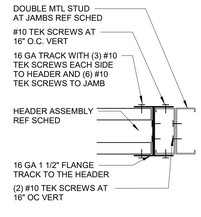

SECTION-B

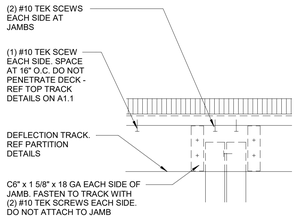

DETAIL-C

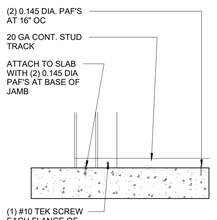

DETAIL-D

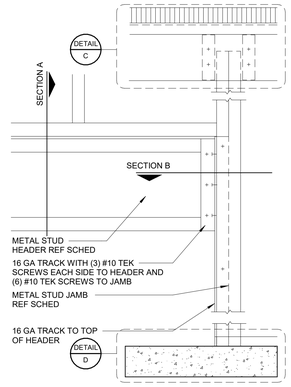

16 HEADER CONNECTION DETAIL
1 1/2" = 1'-0"

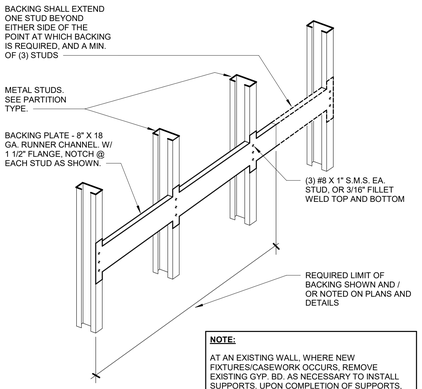

NOTE:

AT AN EXISTING WALL, WHERE NEW FIXTURES/CASEWORK OCCURS, REMOVE EXISTING GYP. BD. AS NECESSARY TO INSTALL SUPPORTS. UPON COMPLETION OF SUPPORTS, INSTALL NEW GYP. BD. PREPARE WALL TO RECEIVE NEW FINISH. MAINTAIN WALL RATING WHEN COMPLETED.

15 BACKING PLATE DETAIL - 8"
3" = 1'-0"

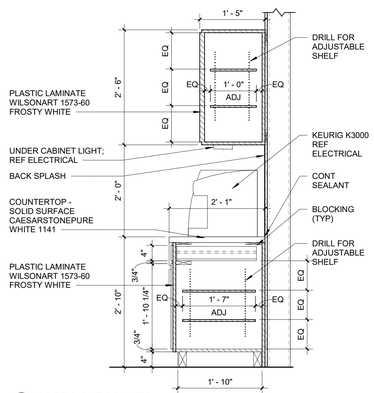

14 SECTION AT DRAWER
3/4" = 1'-0"

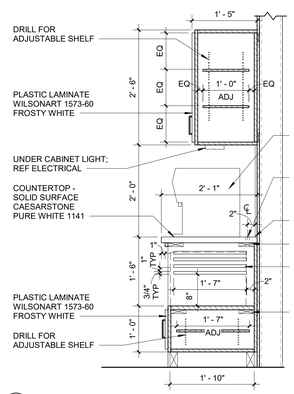

13 SECTION AT MICROWAVE
3/4" = 1'-0"

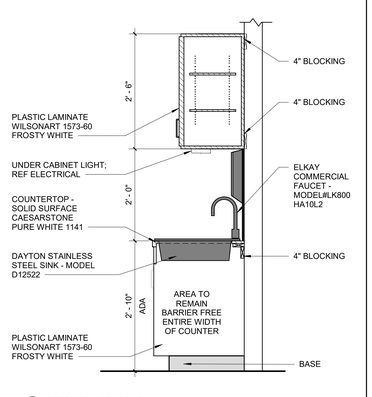

12 SECTION AT SINK
3/4" = 1'-0"

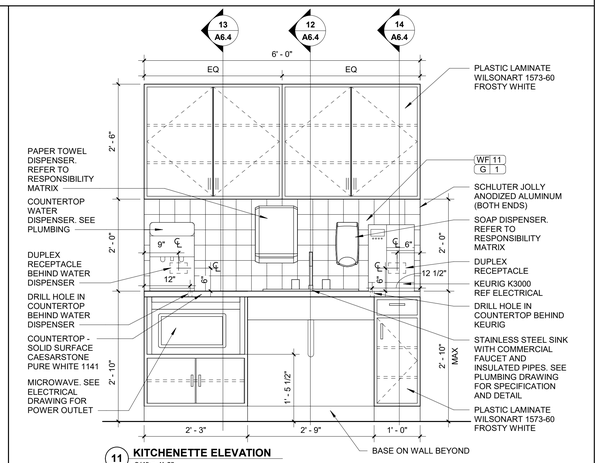

11 KITCHENETTE ELEVATION
3/4" = 1'-0"

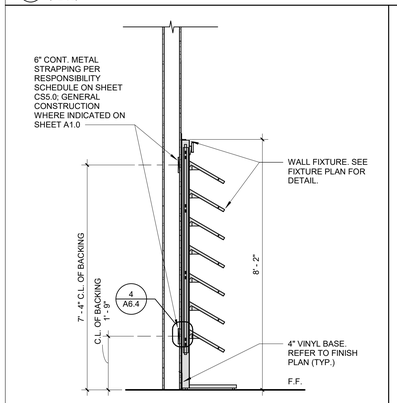

10 SECTION - WALL FIXTURES - FOOTWEAR
1/2" = 1'-0"

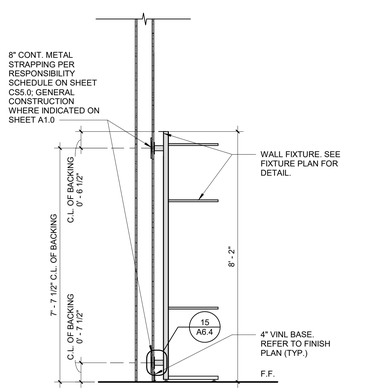

9 SECTION - WALL FIXTURES - APPAREL
1/2" = 1'-0"

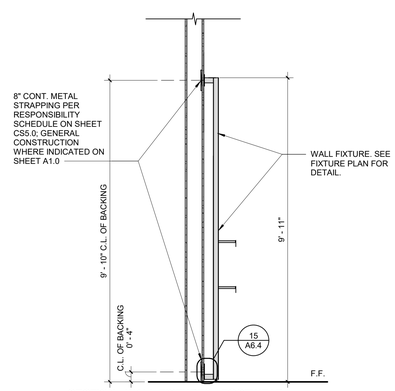

8 SECTION - WALL FIXTURES - FOOTWEAR INITIATIVE
1/2" = 1'-0"

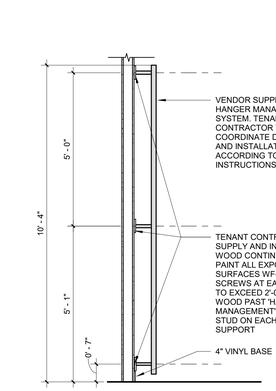

7 HANGER MAN. SECT.
1/2" = 1'-0"

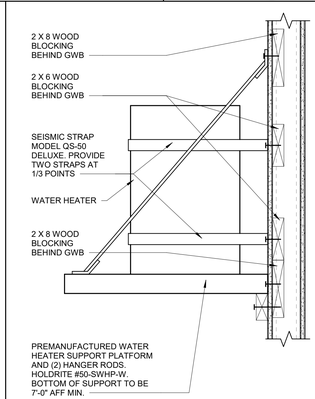

6 WATER HEATER BRACING SUPPORT DETAIL
1 1/2" = 1'-0"

NOTE:
1. PARTICLE BOARD WILL NOT BE ACCEPTABLE AS A SUBSTITUTE FOR MDF. UNDER THE PLASTIC LAM.

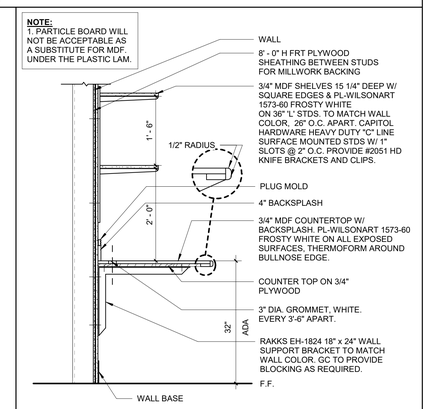

5 WORK COUNTER SECTION
3/4" = 1'-0"

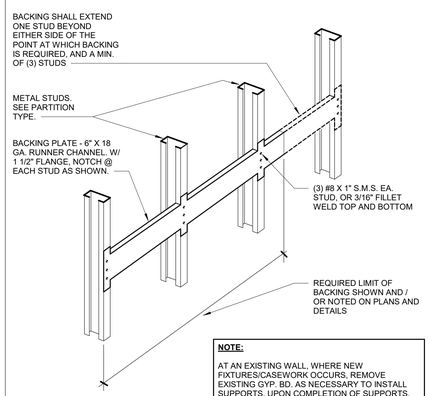

NOTE:

AT AN EXISTING WALL, WHERE NEW FIXTURES/CASEWORK OCCURS, REMOVE EXISTING GYP. BD. AS NECESSARY TO INSTALL SUPPORTS. UPON COMPLETION OF SUPPORTS, INSTALL NEW GYP. BD. PREPARE WALL TO RECEIVE NEW FINISH. MAINTAIN WALL RATING WHEN COMPLETED.

4 BACKING PLATE DETAIL - 6"
3" = 1'-0"

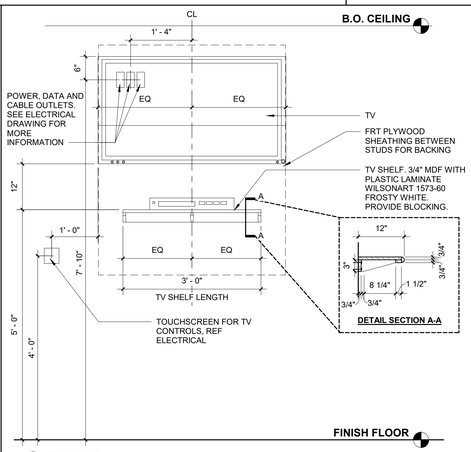

3 TV SHELF
3/4" = 1'-0"

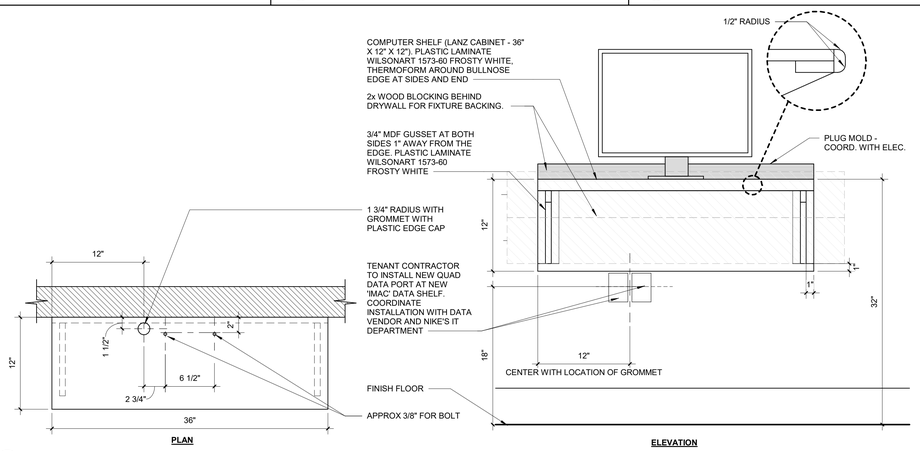

2 COMPUTER SHELF DETAILS
1 1/2" = 1'-0"

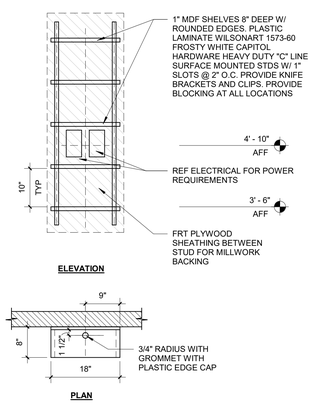

1 RADIO SHELF DETAIL
3/4" = 1'-0"

Architect:

brr

ARCHITECT OF RECORD:
BRR ARCHITECTURE, INC
8131 METCALF AVE
SUITE 300
OVERLAND PARK, KS 66204

www.brrarch.com

TEL: 913-262-9095
FAX: 913-262-9044

COPYRIGHT NOTICE

This drawing was prepared for use on a specific site contemporaneously with its issue date and it is not suitable for use on a different project site or at a later time. Use of this drawing on another project or on another project requires the services of properly licensed architects and engineers. Reproduction of this drawing for reuse on another project is not authorized and may be contrary to the law.

Engineer:

Project Owner:

NIKE, Inc.
One Bowerman Drive
Beaverton, OR 97005
(503) 671-6453
www.nike.com

Project Address:

NIKE FACTORY STORE
WATERFORD LAKES
SHOPPING CENTER
449 N. ALAFAYA TRAIL
ORLANDO, FL 32828
TEMPLATE ISSUE DATE: 11/28/2018

Fixture Package:
UNITE

Stamp:
NOT FOR CONSTRUCTION

Issued For:
PERMIT/BID

Issue Date:
11/06/2020

Revisions:

NO.	REASON	DATE

PROJECT MANAGER: KH
CHECKED BY:
DRAWN BY: RAN

Project Number:
62301411

Sheet Title:
DETAILS

Sheet Number:
A6.4

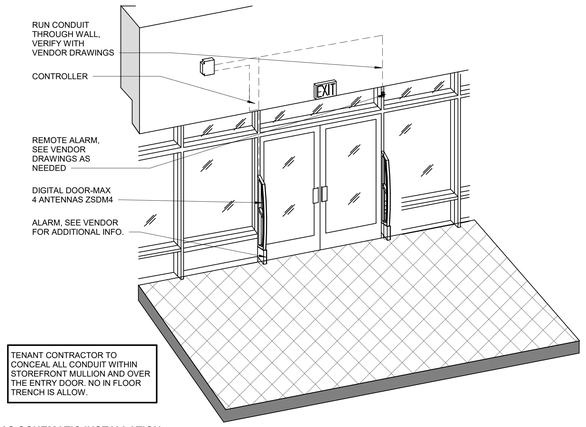

4 **EAS SCHEMATIC INSTALLATION**
N.T.S.

STOREFRONT SIGNAGE

THIS IS REFERENCE ONLY. SEE VENDOR'S DWG FOR MORE DETAIL

SIGN 'A'

ONE (1) FACE & REVERSE-LIT CHANNEL SWOOSH

- FACE-LIT W/ WHITE LEDS
- REVERSE-LIT W/ WHITE LEDS
- SELF-CONTAINED POWER SUPPLY
- FACES ARE WHITE POLYCARBONATE W/ PMS #172
- 1" BLACK JEWELITE TRIM CAP
- 0.063" WHITE ALUMINUM BAFFLE
- 0.250" THICK HYZOD BACK
- 9" x 0.40" ALUMINUM GLOSS BLACK RETURNS
- 'SWOOSH' STUD MOUNTED 1 1/2" OFF WALL STAND-OFFS PAINTED TO MATCH FASCIA
- ELECTRIC TO EXIT OUT THE BOTTOM
- UL LISTED/EXTERIOR SET

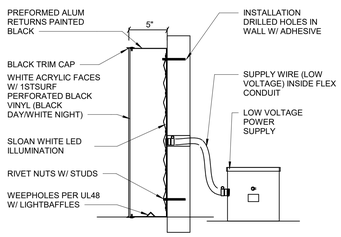

KEYNOTES

1. ACCESSIBILITY SIGNAGE AT ENTRY. SEE DETAILS AND REQUIREMENTS ON SHEET CS4.0.
2. EXISTING STOREFRONT GLAZING SYSTEM AND FINISH TO REMAIN.
3. NEW BLACK AWNING
4. HATCHED AREA INDICATES STOREFRONT GRAPHICS, BY VENDOR
5. NOT USED
6. STOREFRONT SIGNAGE BY NIKE VENDOR. TENANT CONTRACTOR TO COORDINATE WITH VENDOR TO INSTALL BACKING AND POWER OUTLET AS NEEDED. SEE SIGNAGE DRAWING FOR DETAIL.
7. NOT USED
8. EXISTING CANOPY TO REMAIN.
9. VENDOR TO PROVIDE AND INSTALL DEFENSELITE WINDOW SYSTEM AT STOREFRONT. VENDOR TO VERIFY CONDTION OF STOREFRONT PRIOR TO INSTALL.

SHEET NOTES

A. TENANT CONTRACTOR TO VERIFY EXISTING STOREFRONT SYSTEM, SPECIFICATION, AND DIMENSIONS. COORDINATE THE FIELD VERIFIED GLAZING DIMENSION WITH NIKE'S GRAPHIC VENDOR IF APPLICABLE PER PROJECT SCOPE FOR STOREFRONT GRAPHIC INSTALLATION. NOTIFY ARCHITECT IF THERE ARE ANY DISCREPANCIES FROM THIS DRAWING.

B. ALL SIGNS SHALL CONCEAL ALL NECESSARY WIRING, CONDUIT, TRANSFORMERS, BALLASTS, STARTERS, AND OTHER NECESSARY EQUIPMENT WITHIN THEIR INDIVIDUAL LETTERS OR BEHIND STOREFRONT CONSTRUCTION.

C. ALL SIGNS SHALL BE FABRICATED AND INSTALLED WITH UL APPROVED COMPONENTS IN COMPLIANCE WITH ALL APPLICABLE BUILDING AND ELECTRICAL CODES. SIGN MANUFACTURER WILL SUPPLY A UL LABEL, IF REQUIRED BY LOCAL AUTHORITIES, IN AN INCONSPICUOUS LOCATION. NO SIGN COMPANY LABELS WILL BE PERMITTED ON SURFACES OF THE SIGNS IN PUBLIC VIEW.

D. SIGNAGE EXHIBIT IS PROVIDED FOR REFERENCE ONLY. FINAL SIGNAGE LOCATIONS AND SIZES TO BE COORDINATED WITH LANDLORD AND NIKE APPROVED SIGNAGE SHOP DRAWINGS.

E. TENANT CONTRACTOR TO COORDINATE WITH SIGNAGE CONTRACTOR FOR FINAL LOCATIONS AND QUANTITY OF SIGNAGE POWER J-BOXES.

F. ALL EXTERIOR SIGNAGE IS UNDER SEPARATE PERMIT

G. ALL MODIFICATIONS OF EXISTING STOREFRONT SYSTEM SHALL HAVE LANDLORD APPROVAL PRIOR TO START OF WORK. ALL NEW STOREFRONT MULLIONS AND GLAZING SHALL MATCH WITH THE EXISTING MALL STANDARD. TENANT CONTRACTOR TO FIELD VERIFY THE EXISTING SPECIFICATION WITH LANDLORD FOR APPROVAL PRIOR TO INSTALLATION.

NOTE: TENANT CONTRACTOR TO VERIFY ALL STOREFRONT DIMENSIONS PRIOR TO START OF CONSTRUCTION. NOTIFY THE ARCHITECT IF THERE IS ANY DISCREPANCY OR CONFLICT WITH PROJECT SCOPE.

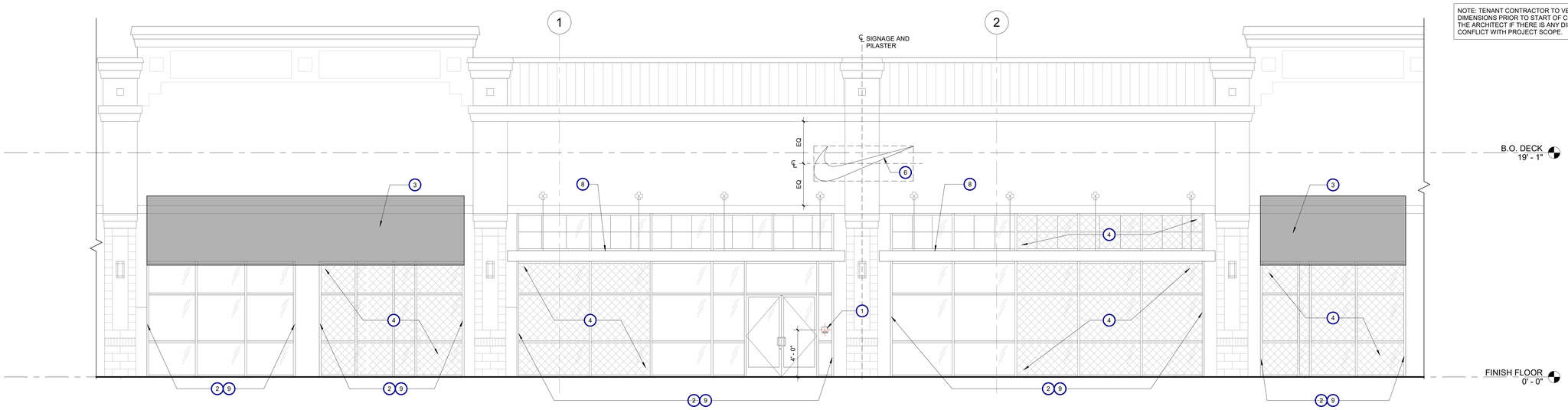

1 **STOREFRONT ELEVATION**
1/4" = 1'-0"

Architect:

brr

ARCHITECT OF RECORD:
BRR ARCHITECTURE, INC
8131 METCALF AVE
SUITE 300
OVERLAND PARK, KS 66204

www.brrarch.com

TEL: 913-262-9095
FAX: 913-262-9044

COPYRIGHT NOTICE

This drawing was prepared for use on a specific site contemporaneously with its issue date and it is not suitable for use on a different project site or at a later time. Use of this drawing for construction on another project requires the services of properly licensed architects and engineers. Reproduction of this drawing for reuse on another project is not authorized and may be contrary to the law.

Engineer:

Project Owner:

NIKE, Inc.
One Bowerman Drive
Beaverton, OR 97005
(503) 671-6453
www.nike.com

Project Address:

NIKE FACTORY STORE
WATERFORD LAKES
SHOPPING CENTER
449 N. ALAFAYA TRAIL
ORLANDO, FL 32828
TEMPLATE ISSUE DATE: 11/28/2018

Fixture Package:
UNITE

Stamp:
NOT FOR CONSTRUCTION

Issued For:
PERMIT/BID

Issue Date:
11/06/2020

Revisions:

NO.	REASON	DATE

PROJECT MANAGER:
KH
CHECKED BY:
DRAWN BY:
RAN

Project Number:
62301411

Sheet Title:
STOREFRONT ELEVATIONS

Sheet Number:
A7.0

NOTE: REFERENCE THE LEED MATERIALS TRACKER FOR MORE INFORMATION ON PRODUCTS AND MATERIALS. ANY MATERIAL OR PRODUCT SUBSTITUTION MUST BE REVIEWED AND CONFIRMED COMPLIANT BY THE SUSTAINABILITY CONSULTANT.

SECTION 01100 - SUMMARY

PART 1 - GENERAL

1.1 DEFINITIONS AND RESPONSIBILITIES

A. THE TERM "WORK" FOR PURPOSES OF THESE CONTRACT DOCUMENTS MEANS THE OBLIGATIONS UNDERTAKEN BY THE CONTRACTOR PURSUANT TO THE CONTRACT DOCUMENTS. WORK INCLUDES, UNLESS SPECIFICALLY EXCEPTED, PLANT, TOOLS, SCAFFOLDING, TRANSPORTATION, SUPERINTENDENCE, INSURANCE, TAXES AND ALL OTHER SERVICES, FACILITIES AND EXPENSES NECESSARY FOR THE FULL PERFORMANCE AND COMPLETION OF THE REQUIREMENTS OF THE CONTRACT DOCUMENTS. WORK ALSO INCLUDES THAT WHICH IS PRODUCED, CONSTRUCTED OR BUILT PURSUANT TO THE CONTRACT DOCUMENTS.

B. "PROVIDE" MEANS TO FURNISH, FABRICATE, DELIVER, INSTALL AND ERECT, AND CONNECT, INCLUDING ALL LABOR, MATERIALS, EQUIPMENT, APPARATUS, APPURTENANCES AND EXPENSES NECESSARY TO COMPLETE IN-PLACE, READY FOR OPERATION AND USE, UNDER THE TERMS OF THE CONTRACT DOCUMENTS.

C. THE CONTRACTOR SHALL BE NOTIFIED OF ANY CLAIM AGAINST THE WORK AND GIVEN SUCH REASONABLE INFORMATION, AUTHORITY AND ASSISTANCE AS MAY BE REQUESTED BY HIM TO ENABLE HIM TO PERFORM

THE OBLIGATIONS. A FAILURE TO NOTIFY THE CONTRACTOR OF A CLAIM OR TO GIVE SUCH INFORMATION, AUTHORITY AND ASSISTANCE SHALL DISCHARGE THE OBLIGATIONS TO THE EXTENT THAT THE CONTRACTOR HAS BEEN PREJUDICED IN THE DEFENSE OF SUCH CLAIM.

D. CONTRACTOR IS RESPONSIBLE TO OBTAIN, SECURE AND PAY FOR ALL PERMITS. IT IS THE RESPONSIBILITY OF THE CONTRACTOR TO COMPLY IN ALL RESPECTS WITH FEDERAL, STATE AND LOCAL STATUTES, ORDINANCES, REGULATIONS, LAWS, AND CODES.

E. THE CONTRACTOR ALSO EXPRESSLY WARRANTS AND GUARANTEES TO THE LANDLORD, OWNER AND ARCHITECT THAT ALL WORK PERFORMED BY THE CONTRACTOR AND ALL WORKMEN, SUPPLIERS AND SUBCONTRACTORS OF THE CONTRACTOR SHALL CONFORM TO THE REQUIREMENTS OF THE CONTRACT DOCUMENTS AND SHALL BE PERFORMED IN A SAFE AND CAREFUL MANNER. THE CONTRACTOR IS RESPONSIBLE FOR IMPLEMENTING, TRACKING, AND DOCUMENTING ASSIGNED LEED CREDITS AND FINAL PAYMENT WILL NOT BE PROVIDED UNTIL THE PROJECT ACHIEVES LEEDv4 ID+C: RETAIL CERTIFICATION.

F. THE FORGOING SHALL NOT DEPRIVE NIKE OR THE ARCHITECT OF ANY ACTION, RIGHT OR REMEDY OTHERWISE AVAILABLE TO THEM, OR EITHER OF THEM, AT COMMON LAW OR OTHERWISE.

G. THE ARCHITECT WILL NOT BE RESPONSIBLE FOR PERFORMANCE OF THE CONTRACT OR FROM THE EFFECTS RESULTING FROM ACTS BY THE CONTRACTOR, SUBCONTRACTORS, SUPPLIERS OR OTHER CONSULTANTS RETAINED BY THE OWNER AND/OR LANDLORD.

H. IN REVIEWING PROGRESS OF THE WORK AND SUBMITTALS FROM THE CONTRACTOR, THE ARCHITECT IS ACTING SOLELY FOR THE CONVENIENCE OF THE OWNER IN FOLLOWING THE WORK. THE ARCHITECT HAS NO RESPONSIBILITY TO ASSIST THE CONTRACTOR IN THE PERFORMANCE OF THE WORK AND ANY ACT BY THE ARCHITECT SHALL NOT RELIEVE THE CONTRACTOR FROM EXCLUSIVE SOLE RESPONSIBILITY FOR PERFORMANCE OF THE WORK.

I. THE OWNER RESERVES THE RIGHT TO OCCUPY ANY PORTION OF THE WORK PRIOR TO SUBSTANTIAL COMPLETION AND SUCH OCCUPANCY SHALL NOT CONSTITUTE ACCEPTANCE OF THE WORK. IF SUCH RIGHT IS EXERCISED, CONTRACTOR SHALL PROVIDE BUILDING SERVICES FOR THE OWNER'S USE AGREEING ON THE COST SHARE OF SUCH SERVICES.

J. ALL DIRECTION AND SUPERVISION OF THE CONSTRUCTION WILL BE THE SOLE RESPONSIBILITY OF THE CONTRACTOR AND NOT THE ARCHITECT OR NIKE.

K. SITE SUPERVISOR WILL INCLUDE LAPTOP, EMAIL AND DIGITAL CAMERA WITH WEEKLY PHOTOS POSTED TO SITEFOLIO DUE IN POWERPOINT FORMAT TO NIKE PM EACH THURSDAY AFTERNOON.

SECTION 01350 - ENVIRONMENTAL GOALS FOR THE PROJECT

PART 1 - GENERAL

1.1 ENVIRONMENTAL GOALS FOR THE PROJECT

A. OVERALL PROJECT GOALS:THE OWNER HAS DETERMINED THAT THIS PROJECT WILL BE ATTEMPTING LEEDv4 ID+C: RETAIL CERTIFICATION - (LEADERSHIP IN ENERGY AND ENVIRONMENTAL DESIGN - LEEDv4 ID+C: RETAIL CERTIFICATION). HENCE, THE OWNER HAS ESTABLISHED THE FOLLOWING ENVIRONMENTAL GOALS FOR THE PROJECT. THESE GOALS ARE GENERAL IN NATURE; REFER TO SPECIFIC SPECIFICATION SECTIONS FOR MORE DETAILED REQUIREMENTS. NOTIFY OWNER AND ARCHITECT IF CONFLICTS ARISE BETWEEN PERFORMANCE OF THE WORK AND ENVIRONMENTAL GOALS. THIS SPECIFICATION IS NOT INTENDED TO LIMIT ALTERNATIVE MEANS OF ACHIEVING THESE GOALS. SUGGESTIONS AND INPUT FROM THE CONTRACTOR(S) FOR IMPLEMENTING THESE GOALS ARE ENCOURAGED.

SECTION 01 81 13
LEED REQUIREMENTS
PART 1 - GENERAL
1.1 SUMMARY
A. THIS SECTION INCLUDES GENERAL REQUIREMENTS AND PROCEDURES FOR COMPLIANCE WITH CERTAIN U.S. GREEN BUILDING COUNCIL (USGBC) LEED® PREREQUISITES AND CREDITS NEEDED FOR THE PROJECT TO OBTAIN LEED **CERTIFIED** CERTIFICATION.
1. OTHER LEED PREREQUISITES AND CREDITS NEEDED TO OBTAIN LEED CERTIFICATION ARE DEPENDENT ON MATERIAL SELECTIONS AND MAY NOT BE SPECIFICALLY IDENTIFIED AS LEED REQUIREMENTS. COMPLIANCE WITH REQUIREMENTS NEEDED TO OBTAIN LEED PREREQUISITES AND CREDITS MAY BE USED AS ONE CRITERION TO EVALUATE SUBSTITUTION REQUESTS.
2. ADDITIONAL LEED PREREQUISITES AND CREDITS NEEDED TO OBTAIN THE INDICATED LEED CERTIFICATION ARE DEPENDENT ON THE ARCHITECT'S DESIGN AND OTHER ASPECTS OF THE PROJECT THAT ARE NOT PART OF THE WORK OF THIS CONTRACT.
3. THE CONTRACTOR WILL IMPLEMENT PRACTICES AND PROCEDURES TO MEET THE PROJECT'S TARGETED LEED CERTIFIED RATING. ASSURE THAT ALL PROJECT TEAM MEMBERS ARE AWARE OF LEED CERTIFICATION GOALS AND COMPLY WITH DOCUMENTATION REQUIREMENTS.
4. THE CONTRACTOR AND SUBCONTRACTORS ARE REQUIRED TO FURNISH DOCUMENTATION TO MEET LEED REQUIREMENTS. NOT PROVIDING THE NECESSARY DOCUMENTATION MAY LEAD TO A REQUEST FOR RE-SUBMITTAL. PERIODIC MEETINGS SHOULD BE CONDUCTED WITH PROJECT TEAM AND SUBCONTRACTORS TO ENSURE ALL UNDERSTAND THE DOCUMENTATION REQUIREMENTS, AND THAT THE APPROPRIATE DOCUMENTATION IS BEING COLLECTED.

1.2 RELATED SECTIONS
A. IT SHOULD BE ASSUMED THAT ALL SECTION MAY INCLUDE REQUIREMENTS INTENDED TO ACHIEVE LEED CREDITS.
B. RELATED SECTIONS INCLUDE THE FOLLOWING:
1. SECTION 01 74 19 – CONSTRUCTION WASTE MANAGEMENT AND DISPOSAL
2. SECTION 01 81 19 – CONSTRUCTION INDOOR AIR QUALITY REQUIREMENTS
3. DIVISIONS 2 THROUGH 48 SECTION FOR LEED REQUIREMENTS SPECIFIC TO THE WORK OF EACH OF THESE SECTIONS. THESE REQUIREMENTS MAY OR MAY NOT INCLUDE REFERENCE TO LEED.
4. SECTION 01 91 00 - COMMISSIONING

1.3 DEFINITIONS
A. LEED V4 ID+C: RETAIL: LEADERSHIP IN ENERGY AND ENVIRONMENTAL DESIGN – GREEN BUILDING RATING SYSTEM FOR NEW CONSTRUCTION AND MAJOR RENOVATIONS VERSION 4. LEED IS A NATIONAL RATING SYSTEM FOR GREEN BUILDINGS CREATED BY THE US GREEN BUILDING COUNCIL AND ADMINISTERED BY THE GREEN BUILDING CERTIFICATION INSTITUTE. ALL REFERENCES TO LEED THROUGHOUT THE CONSTRUCTION DOCUMENTS SHALL MEAN LEED V4 ID+C: RETAIL.
B. BIO-BASED MATERIALS: MATERIALS THAT MEET THE SUSTAINABLE AGRICULTURE NETWORK'S SUSTAINABLE AGRICULTURE STANDARD. BIO-BASED RAW MATERIALS SHALL BE TESTED USING ASTM D 6866 AND BE LEGALLY HARVESTED, AS DEFINED BY THE EXPORTING AND RECEIVING COUNTRY.
C. CDPH STANDARD METHOD V1.1: CALIFORNIA DEPARTMENT OF PUBLIC HEALTH (CDPH) STANDARD METHOD FOR THE TESTING AND EVALUATION OF VOLATILE ORGANIC CHEMICAL EMISSIONS FROM INDOOR SOURCES USING ENVIRONMENTAL CHAMBERS, V. 1.1–2010, FOR THE EMISSIONS TESTING AND REQUIREMENTS OF PRODUCTS AND MATERIALS.
D. CHAIN-OF-CUSTODY CERTIFICATES: CERTIFICATES SIGNED BY MANUFACTURERS AND FABRICATORS CERTIFYING THAT WOOD USED TO MAKE PRODUCTS WAS OBTAINED FROM FORESTS CERTIFIED BY AN FSC-ACCREDITED CERTIFICATION BODY TO COMPLY WITH FSC STD-01-001.
E. COMPOSITE WOOD AND AGRIFIBER: PRODUCTS MADE OF WOOD PARTICLES AND/OR PLANT MATERIAL PRESSED AND BONDED WITH ADHESIVE OR RESIN SUCH AS PARTICLEBOARD, MEDIUM DENSITY FIBERBOARD (MDF), PLYWOOD, WHEATBOARD, STRAWBOARD, PANEL SUBSTRATES, AND DOOR CORES.
F. CORPORATE SUSTAINABILITY REPORT: A THIRD-PARTY VERIFIED REPORT THAT OUTLINES THE ENVIRONMENTAL IMPACTS OF EXTRACTION OPERATIONS AND ACTIVITIES ASSOCIATED WITH THE MANUFACTURER'S PRODUCT AND THE PRODUCT'S SUPPLY CHAIN.
G. ENVIRONMENTAL PRODUCT DECLARATION (EPD): AN INDEPENDENTLY VERIFIED REPORT BASED ON LIFE-CYCLE ASSESSMENT STUDIES THAT HAVE BEEN CONDUCTED ACCORDING TO A SET OF COMMON RULES FOR EACH PRODUCT CATEGORY AND PEER-REVIEWED.
1. PRODUCT-SPECIFIC TYPE III EPD: A PRODUCT WITH A THIRD-PARTY CERTIFICATION, INCLUDING EXTERNAL VERIFICATION, IN WHICH THE MANUFACTURER IS EXPLICATED RECOGNIZED BY THE PROGRAM OPERATOR. EPD MUST CONFORM TO ISO 14025, 14040, 14044, AND EN 15804 OR ISO 21930 AND HAVE AT LEAST A CRADLE TO GATE SCOPE.
2. INDUSTRY-WIDE (GENERIC) EPD: PROVIDE PRODUCTS WITH THIRD-PARTY CERTIFICATION (TYPE III), INCLUDING EXTERNAL VERIFICATION, IN WHICH THE MANUFACTURER IS EXPLICITLY RECOGNIZED AS A PARTICIPANT BY THE PROGRAM OPERATOR. EPD MUST CONFORM TO ISO 14025, 14040, 14044, AND EN 15804 OR ISO 21930 AND HAVE AT LEAST A CRADLE TO GATE SCOPE.
3. PRODUCT-SPECIFIC DECLARATION: A PRODUCT WITH A PUBLICLY AVAILABLE, CRITICALLY REVIEWED LIFE-CYCLE ASSESSMENT CONFORMING TO ISO 14044 THAT HAS AT LEAST A CRADLE TO GATE SCOPE.
H. EXTENDED PRODUCER RESPONSIBILITY (EPR): MEASURES UNDERTAKEN BY THE MAKER OF A PRODUCT TO ACCEPT ITS OWN AND SOMETIMES OTHER MANUFACTURERS' PRODUCTS AS POSTCONSUMER WASTE AT THE END OF THE PRODUCTS' USEFUL LIFE.
I. HEALTH PRODUCT DECLARATION OPEN STANDARD (HPD): A STANDARD FORMAT FOR REPORTING PRODUCT CONTENT AND ASSOCIATED HEALTH INFORMATION FOR BUILDING PRODUCTS AND MATERIALS.
J. INDOOR AIR QUALITY (IAQ) MANAGEMENT PLAN: PLAN DEVELOPED BY THE CONTRACTOR TO PROVIDE A HEALTHY INDOOR ENVIRONMENT FOR WORKERS AND BUILDING OCCUPANTS DURING CONSTRUCTION. PLAN MUST MEET OR EXCEED THE RECOMMENDATIONS OF THE SHEET METAL AND AIR CONDITIONING CONTRACTORS NATIONAL ASSOCIATION (SMACNA) "IAQ GUIDELINES FOR OCCUPIED BUILDINGS UNDER CONSTRUCTION."
K. LEADERSHIP EXTRACTION PRACTICES: PRODUCTS THAT MEET AT LEAST ONE OF THE RESPONSIBLE EXTRACTION CRITERIA, WHICH INCLUDE: EXTENDED PRODUCER RESPONSIBILITY; BIO-BASED MATERIALS; FSC WOOD PRODUCTS; MATERIALS REUSE; RECYCLED CONTENT; AND OTHER USGBC APPROVED PROGRAMS.
L. MATERIAL COST: THE DOLLAR VALUE OF MATERIALS BEING PROVIDED TO THE SITE, AFTER CONTRACTOR MARK-UPS, INCLUDING TRANSPORTATION COSTS, TAXES, FEES, AND SHOP LABOR, BUT EXCLUDING FIELD EQUIPMENT AND FIELD LABOR COSTS.
M. MATERIALS REUSE: REUSE INCLUDES SALVAGED, REFURBISHED, OR REUSED PRODUCTS.
N. MULTI-ATTRIBUTE OPTIMIZATION: THIRD PARTY CERTIFIED PRODUCTS THAT DEMONSTRATE IMPACT REDUCTION BELOW INDUSTRY AVERAGE IN AT LEAST THREE OF THE FOLLOWING SIX CATEGORIES: GLOBAL WARMING POTENTIAL; STRATOSPHERIC OZONE DEPLETION; ACIDIFICATION; EUTROPHICATION; TROPOSPHERIC OZONE CREATION; NONRENEWABLE RESOURCE DEPLETION.
O. RECYCLED CONTENT: RECYCLED CONTENT IS THE SUM OF POSTCONSUMER RECYCLED CONTENT PLUS ONE-HALF THE PRECONSUMER RECYCLED CONTENT, BASED ON COST.
1. "POSTCONSUMER" MATERIAL IS DEFINED AS WASTE MATERIAL GENERATED BY HOUSEHOLDS OR BY COMMERCIAL, INDUSTRIAL, AND INSTITUTIONAL FACILITIES IN THEIR ROLE AS END USERS OF THE PRODUCT, WHICH CAN NO LONGER BE USED FOR ITS INTENDED PURPOSE
2. "PRECONSUMER" MATERIAL IS DEFINED AS MATERIAL DIVERTED FROM THE WASTE STREAM DURING THE MANUFACTURING PROCESS. EXCLUDED IS REUTILIZATION OF MATERIALS, SUCH AS REWORK, REGRIND, OR SCRAP, GENERATED IN A PROCESS AND CAPABLE OF BEING RECLAIMED WITHIN THE SAME PROCESS THAT GENERATED IT.
P. REGIONAL MATERIALS: MATERIALS THAT ARE EXTRACTED, HARVESTED, RECOVERED, AND MANUFACTURED WITHIN A RADIUS OF 100 MILES FROM THE PROJECT SITE.
Q. VOLATILE ORGANIC COMPOUNDS (VOC) EMISSIONS TEST: REFER TO CDPH STANDARD METHOD V1.1 DEFINITION.

1.4 ADMINISTRATIVE REQUIREMENTS
A. WORK OF THIS PROJECT INCLUDES COMPLETED BUILDING AND APPLICATION FOR LEED CERTIFICATION. WORK IS NOT COMPLETE UNTIL OWNER HAS ACCEPTED USGBC'S FINAL REVIEW OF LEED CERTIFICATION.
1. PROVIDE DOCUMENTATION REQUIRED BY LEED AND LEED REVIEW.
B. PROVIDE MATERIALS AND PROCEDURES NECESSARY TO OBTAIN LEED PREREQUISITES AND CREDITS REQUIRED IN THIS SECTION. OTHER SECTIONS MAY SPECIFY REQUIREMENTS THAT CONTRIBUTE TO LEED PREREQUISITES AND CREDITS. REFER TO OTHER SECTIONS FOR ADDITIONAL MATERIALS AND PROCEDURES NECESSARY TO OBTAIN LEED PREREQUISITES AND CREDITS.
C. RESPOND TO QUESTIONS AND REQUESTS FOR ADDITIONAL INFORMATION FROM ARCHITECT AND THE USGBC REGARDING LEED CREDITS UNTIL THE USGBC HAS MADE ITS DETERMINATION ON THE PROJECT'S LEED CERTIFICATION APPLICATION.
D. LEED SUBMITTALS: UPLOAD LEED DOCUMENTATION SUBMITTAL DATA DIRECTLY TO SITEFOLIO. COMPLETE LEED VOLUME FORMS AT LEAST MONTHLY AND AS NECESSARY TO DOCUMENT LEED CREDITS FOR SUBMITTALS REQUIRED IN THIS SECTION.
E. LEED CONFERENCE: SCHEDULE AND CONDUCT A CONFERENCE AT A TIME CONVENIENT TO OWNER AND ARCHITECT WITHIN **21 DAYS** PRIOR TO COMMENCEMENT OF THE WORK. ADVISE ARCHITECT, GENERAL CONTRACTOR, OWNER'S COMMISSIONING AUTHORITY, [**AND OWNER'S PROJECT MANAGER**] OF SCHEDULED MEETING DATES.
1. ATTENDEES: AUTHORIZED REPRESENTATIVES OF OWNER, OWNER'S COMMISSIONING AUTHORITY, [**OWNER'S PROJECT MANAGER,**] ARCHITECT, AND THEIR CONSULTANTS; GENERAL CONTRACTOR AND ITS SUPERINTENDENT; MAJOR SUBCONTRACTORS; SUPPLIERS; AND OTHER CONCERNED PARTIES SHALL ATTEND THE CONFERENCE. PARTICIPANTS AT THE CONFERENCE SHALL BE FAMILIAR WITH PROJECT AND AUTHORIZED TO CONCLUDE MATTERS RELATING TO THE WORK.
2. AGENDA: LEED GOALS FOR THE PROJECT, CONTRACTOR'S ACTION PLANS, AND DISCUSSION OF TARGETED LEED PREREQUISITES AND CREDITS.
3. MINUTES: RECORD AND DISTRIBUTE MINUTES TO ATTENDEES AND OTHER ENTITIES WITH RESPONSIBILITIES FOR OBTAINING LEED CREDITS.

1.5 SUBMITTALS
A. GENERAL: SUBMIT ADDITIONAL LEED RELATED SUBMITTALS INCLUDED IN OTHER SECTIONS OF THE SPECIFICATIONS.
B. LEED SUBMITTALS ARE IN ADDITION TO OTHER SUBMITTALS. IF SUBMITTED ITEM IS IDENTICAL TO THAT SUBMITTED TO COMPLY WITH OTHER REQUIREMENTS, SUBMIT DUPLICATE COPIES AS A SEPARATE SUBMITTAL TO VERIFY COMPLIANCE WITH INDICATED LEED REQUIREMENTS.
C. PROJECT CONSTRUCTION MATERIALS COST DATA: PROVIDE THE NECESSARY MATERIAL COST DATA REQUIRED TO COMPLETE THE LEED-ONLINE CALCULATORS, INCLUDING THE TOTAL PROJECT MATERIALS COST AND ITEMIZED COSTS OF SPECIFIC MATERIALS BEING TRACKED FOR LEED MATERIALS AND RESOURCES CREDITS. THE TOTAL PROJECT CONSTRUCTION MATERIALS COST INCLUDES ALL MATERIALS CONTAINED IN CSI MASTERFORMAT™ 2004 EDITION DIVISIONS 03 THROUGH 10, 31, 32. THE TOTAL MATERIALS COST EXCLUDES SPECIALTIES, AND CONVEYING SYSTEMS. ALL MATERIAL COSTS EXCLUDE LABOR AND EQUIPMENT. MECHANICAL, ELECTRICAL AND PLUMBING SYSTEMS SHOULD BE INCLUDED.
D. GENERAL, PRODUCT DATA SUBMITTAL REPORTING FORM: PROJECT SUBMITTALS MUST BE ACCOMPANIED BY A COMPLETED PRODUCT DATA SUBMITTAL REPORTING FORM. SUBMITTAL PACKAGES MUST ALSO INCLUDE HIGHLIGHTED DOCUMENTATION SUPPORTING THE SUSTAINABILITY CLAIMS MADE ON THE BUILDING PRODUCT DISCLOSURE AND OPTIMIZATION (BPDO) CALCULATOR.
E. PROVIDE LOCATION AND DISTANCE FROM PROJECT OF MATERIAL MANUFACTURER AND POINT OF EXTRACTION, HARVEST, OR RECOVERY FOR EACH RAW MATERIAL
F. LEED ACTION PLANS: PROVIDE PRELIMINARY SUBMITTALS WITHIN **FOURTEEN** DAYS OF DATE ESTABLISHED FROM [**THE NOTICE OF AWARD**] AND SUBMIT THE FOLLOWING ACTION PLANS:
1. PREREQUISITE – CONSTRUCTION WASTE MANAGEMENT: CONSTRUCTION WASTE MANAGEMENT PLAN COMPLYING WITH DIVISION 1 SECTION "CONSTRUCTION WASTE MANAGEMENT."
2. CREDIT – CONSTRUCTION IAQ MANAGEMENT PLAN: CONSTRUCTION INDOOR AIR QUALITY MANAGEMENT PLAN COMPLYING WITH DIVISION 1 SECTION "CONSTRUCTION IAQ MANAGEMENT."
G. LEED PROGRESS REPORTS: CONCURRENT WITH EACH APPLICATION FOR PAYMENT, SUBMIT REPORTS SUMMARIZING PROGRESS IN CONSTRUCTION AND PURCHASING ACTIVITIES RELATED TO THE FOLLOWING CREDITS:
1. PREREQUISITE – CONSTRUCTION WASTE MANAGEMENT PLANNING: CONSTRUCTION WASTE REDUCTION PROGRESS REPORTS COMPLYING WITH DIVISION 1 SECTION "CONSTRUCTION WASTE MANAGEMENT."
2. CREDIT – CONSTRUCTION IAQ MANAGEMENT PLAN: CONSTRUCTION INDOOR AIR QUALITY MANAGEMENT REPORTS COMPLYING WITH DIVISION 1 SECTION "CONSTRUCTION IAQ MANAGEMENT."
3. CREDIT – BUILDING PRODUCT DISCLOSURE AND OPTIMIZATION- ENVIRONMENTAL PRODUCT DECLARATIONS (EPD): SUMMARY OF MANUFACTURER AND PRODUCT EPD FORMS COLLECTED FOR ALL REQUIRED MATERIALS THAT HAVE BEEN PURCHASED OR INSTALLED.
4. CREDIT – BUILDING PRODUCT DISCLOSURE AND OPTIMIZATION- SOURCING OF RAW MATERIALS: SUMMARY OF MANUFACTURER AND PRODUCT FORMS COLLECTED FOR ALL REQUIRED MATERIALS THAT HAVE BEEN PURCHASED OR INSTALLED. INCLUDE THE COST OF THE MATERIALS.
5. CREDIT – BUILDING PRODUCT DISCLOSURE AND OPTIMIZATION- MATERIAL INGREDIENTS: SUMMARY OF MANUFACTURER AND PRODUCT FORMS COLLECTED FOR ALL REQUIRED MATERIALS THAT MEET THE CRITERIA FOR REPORTING MATERIAL INGREDIENTS. INCLUDE THE COST OF THE MATERIALS.
6. CREDIT – LOW-EMITTING MATERIALS: SUMMARY OF PRODUCT DATA COLLECTED FOR ALL ADHESIVES, SEALANTS, PAINTS, COATINGS, CARPETING, COMPOSITE WOOD MATERIALS AND LAMINATING ADHESIVES USED TO FABRICATE COMPOSITE WOOD ASSEMBLIES THAT ARE INSTALLED INSIDE OF THE BUILDING'S MOISTURE BARRIER.
7. CREDIT – CONSTRUCTION IAQ MANAGEMENT PLAN: CONSTRUCTION INDOOR AIR QUALITY MANAGEMENT REPORTS COMPLYING WITH DIVISION 1 SECTION "CONSTRUCTION IAQ MANAGEMENT."
H. LEED DOCUMENTATION SUBMITTALS: FOR EACH SECTION OF THE SPECIFICATION, SUBMIT THE FOLLOWING FOR EACH APPLICABLE LEED CREDIT.
1. PREREQUISITE – INDOOR WATER USE REDUCTION: CUT SHEETS FOR ALL FAUCETS, SHOWERS, TOILETS AND URINALS INDICATING FLOW RATES (GALLONS/MINUTE) AND FLUSH VOLUMES (GALLONS/FLUSH). ALL FLUSH AND FLOW FIXTURES MUST BE EPA WATERSENSE COMPLIANT.
2. PREREQUISITE – FUNDAMENTAL REFRIGERANT MANAGEMENT: CUT SHEETS FOR HVAC&R EQUIPMENT INDICATING REFRIGERANT TYPE
3. CREDIT – BUILDING PRODUCT DISCLOSURE AND OPTIMIZATION- ENVIRONMENTAL PRODUCT DECLARATIONS (EPD):
   A. SUBMIT A THIRD-PARTY CERTIFIED EPD FORMS THAT COMPLY WITH LEED REQUIREMENTS: PRODUCT SPECIFIC TYPE III (100%) GENERIC INDUSTRY-WIDE EPD (COUNTS 50%) OR PRODUCT SPECIFIC EPD (COUNTS 25%)
4. CREDIT – BUILDING PRODUCT DISCLOSURE AND OPTIMIZATION- SOURCING OF RAW MATERIALS: PROVIDE MANUFACTURER AND PRODUCT INFORMATION FOR ALL REQUIRED MATERIALS. INCLUDE THE COST OF THE MATERIALS.
   A. PROVIDE DOCUMENTATION OF PRODUCTS, INCLUDING COST, THAT MEET ONE OF THE FOLLOWING EXTRACTION CRITERIA.
      1. EXTENDED PRODUCER RESPONSIBILITY FOR END USE CONSTRUCTION PRODUCTS.
         A. MANUFACTURER-BASED PROGRAM: MANUFACTURER OF PRODUCT MUST HAVE A TAKE-BACK OR RECYCLING PROGRAM IN PLACE.
         B. THIRD-PARTY PROGRAM: A SEPARATE BUSINESS COLLECTS THE MATERIAL AND IS THEN RESPONSIBLE FOR TRANSPORTING IT BACK TO THE MANUFACTURER.
      2. FOREST STEWARDSHIP COUNCIL (FSC) FOR CERTIFIED WOOD PRODUCTS. PRODUCT DATA AND CHAIN-OF-CUSTODY CERTIFICATES FOR PRODUCTS CONTAINING CERTIFIED WOOD. INCLUDE STATEMENT INDICATING COST FOR EACH CERTIFIED WOOD PRODUCT.
      3. POST-CONSUMER AND PRE-CONSUMER RECYCLED CONTENT
5. CREDIT – BUILDING PRODUCT DISCLOSURE AND OPTIMIZATION- MATERIAL INGREDIENTS: PROVIDE DOCUMENTATION OF MANUFACTURER AND PRODUCT FOR ALL REQUIRED MATERIALS THAT MEET ONE OF THE FOLLOWING CRITERIA FOR REPORTING MATERIAL INGREDIENTS.
   A. OPTION 1: MANUFACTURER INVENTORY THAT COMPLIES WITH ONE OF THE FOLLOWING;
      1. HEALTH PRODUCT DECLARATION. THE END USE PRODUCT HAS A PUBLISHED COMPLETE HEALTH PRODUCT DECLARATION WITH FULL DISCLOSURE OF KNOWN HAZARDS IN COMPLIANCE WITH THE HEALTH PRODUCT DECLARATION OPEN STANDARD. REGARDLESS OF VERSION THE HPD MUST BE LEED COMPLIANT.
      2. CRADLE TO CRADLE. THE END USE PRODUCT HAS BEEN CERTIFIED BY CRADLE TO CRADLE V2 OR CRADLE TO CRADLE V3. PROVIDE VERSION AND LEVEL OF CERTIFICATION.
      3. GREEN SCREEN V1.2 BENCHMARK.
      4. DECLARE PRODUCT LABELS
      5. ANSI/BIFMA E3 FURNITURE SUSTAINABILITY STANDARD.
      6. MANUFACTURERS WITH SUPPLY CHAIN OPTIMIZATION REPOSTS.
6. CREDIT – CONSTRUCTION WASTE MANAGEMENT:
   A. OPTION 1: DIVERSION
      1. COMPLY WITH DIVISION 1 SECTION "CONSTRUCTION WASTE MANAGEMENT AND DISPOSAL."
      2. CONSTRUCTION WASTE MANAGEMENT PLAN.
      3. COMPLETE LEED CONSTRUCTION AND DEMOLITION WASTE CALCULATOR.
      4. ITEMIZED WASTE HAULING CERTIFICATES/RECEIPTS FOR ALL WASTE REMOVED FROM THE PROJECT SITE AND DOCUMENTATION OF RECYCLING RECOVERY RATE FOR OFF-SITE SORTING FACILITIES (IF WASTE IS COMMINGLED).
      5. IF USING AN AVERAGE ANNUAL COMMINGLED RATE, PROVIDE A LETTER BY A FEDERAL, STATE, CITY OR LOCAL GOVERNING AUTHORITY STATING THE AVERAGE ANNUAL RECYCLING RATE FOR THE SORTING FACILITY.
      6. AT LEAST THREE MATERIAL STREAMS MUST BE TRACKED. IF THEY ARE COMMINGLED THE THREE MATERIALS MUST BE WEIGHED AND REPORTED.
7. CREDIT – ENHANCED INDOOR AIR QUALITY STRATEGIES
   A. PROVIDE CUT SHEET OF CO2 SENSORS BEING USED.
   B. CUT SHEETS INDICATING MERV VALUES FOR FILTRATION MEDIA USED DURING CONSTRUCTION.

9. CREDIT – LOW-EMITTING MATERIALS,
   A. PAINTS, COATINGS, ADHESIVES AND SEALANTS:
      1. SUBMIT GENERAL EMISSIONS EVALUATION USING CALIFORNIA DEPARTMENT OF PUBLIC HEALTH (CDPH) STANDARD METHOD V1.1 FOR VOC EMISSIONS BY VOLUME.
      2. PRODUCT DATA AND MATERIAL SAFETY DATA SHEETS (MSDS) FOR ALL PAINTS, COATINGS, ADHESIVES AND SEALANTS USED INSIDE THE BUILDING'S MOISTURE BARRIER INDICATING THE VOLATILE ORGANIC COMPOUND (VOC) CONTENT OF EACH PRODUCT IN GRAMS PER LITER (G/L).
   B. FLOORING SYSTEMS:
      1. SUBMIT GENERAL EMISSIONS EVALUATION USING CALIFORNIA DEPARTMENT OF PUBLIC HEALTH (CDPH) STANDARD METHOD V1.1 FOR VOC EMISSIONS BY VOLUME.
      2. SUBMIT "FLOORSCORE", CRI "GREEN LABEL PLUS" OR OTHER THIRD PARTY CERTIFICATION THAT COMPLIES WITH GENERAL EMISSIONS EVALUATION ABOVE.
   C. COMPOSITE WOOD:
      1. SUBMIT GENERAL EMISSIONS EVALUATION USING CALIFORNIA DEPARTMENT OF PUBLIC HEALTH (CDPH) STANDARD METHOD V1.1 FOR VOC EMISSIONS BY VOLUME.
      2. SUBMIT DOCUMENTATION SHOWING COMPLIANCE WITH CALIFORNIA AIR RESOURCES BOARD (CARB) 93120 AIRBORNE TOXIC CONTROL MEASURE (ATCM) FOR ULTRA-LOW EMITTING FORMALDEHYDE RESINS OR ZERO FORMALDEHYDE FROM COMPOSITE WOOD PRODUCTS.
   D. CELLING SYSTEMS, INTERIOR WALL SYSTEMS, THERMAL INSULATION AND ACOUSTIC INSULATION.
      1. SUBMIT GENERAL EMISSIONS EVALUATION USING CALIFORNIA DEPARTMENT OF PUBLIC HEALTH (CDPH) STANDARD METHOD V1.1 FOR VOC EMISSIONS BY VOLUME.
   E. FURNITURE
      1. SUBMIT DATA SHOWING VOC EMISSIONS COMPLY WITH THE LOW-EMITTING REQUIREMENTS IN THE ANSI/BIFMA E3–2011 FURNITURE SUSTAINABILITY STANDARD. AT LEAST 90 PERCENT OF FURNITURE, MEASURED BY COST, SHALL BE TESTED IN ACCORDANCE WITH ANSI/BIFMA STANDARD METHOD M7.1-2011; COMPLY WITH ANSI/BIFMA E3-2011 FURNITURE SUSTAINABILITY STANDARD, SECTIONS 7.6.1 AND 7.6.2, USING EITHER THE CONCENTRATION MODELING APPROACH OR THE EMISSIONS FACTOR APPROACH; AND MODEL THE TEST RESULTS USING THE OPEN PLAN, PRIVATE OFFICE, OR SEATING SCENARIO IN ANSI/BIFMA M7.1, AS APPROPRIATE.
4. CREDIT - CONSTRUCTION INDOOR AIR QUALITY MANAGEMENT
   A. PROVIDE CONSTRUCTION INDOOR AIR QUALITY MANAGEMENT PLAN THAT COMPLIES WITH THE SMACNA IAQ GUIDELINES FOR OCCUPIED BUILDINGS UNDER CONSTRUCTION, 2ND EDITION, 2007, ANSI/SMACNA 008–2008, CHAPTER 3.
   B. PHOTOGRAPHS HIGHLIGHTING THE IAQ MANAGEMENT PLAN PRACTICES, LABELED TO IDENTIFY THE HIGHLIGHTED APPROACH. AT LEAST 18 PHOTOGRAPHS – SIX PHOTOGRAPHS TAKEN ON THREE DIFFERENT OCCASIONS DURING CONSTRUCTION."
   C. NO SMOKING WITHIN 25' OF THE CONSTRUCTION SITE.
5. CREDIT – INDOOR AIR QUALITY ASSESSMENT
   A. NARRATIVE OUTLINING THE BUILDING FLUSH-OUT PROCEDURES, INCLUDING START AND FINISH DATES AND MECHANICAL SYSTEM SETTINGS. DOCUMENTATION THAT DEMONSTRATES THE BUILDING WAS MAINTAINED AT AN INTERNAL TEMPERATURE OF AT LEAST 60° F (15° C) BUT NO HIGHER THAN 80° F (27° C) AND RELATIVE HUMIDITY NO HIGHER THAN 60%. SEE SECTION CONSTRUCTION INDOOR AIR QUALITY.
   B. IF IAQ TESTING IS PERFORMED IN PLACE OF BUILDING FLUSH-OUT, PROVIDE SPECIFICATIONS AND DOCUMENTATION DEMONSTRATING CONFORMANCE WITH IAQ TESTING PROCEDURES PER CREDIT REQUIREMENTS.

PART 2 - PRODUCTS
2.1. SUMMARY OF REFERENCED STANDARDS
A. CREDIT – WATER USE REDUCTION
   1. PLUMBING FIXTURE FLOW AND FLUSH RATES MUST NOT EXCEED THE FOLLOWING RATES AND INCLUDE A WATERSENSE LABEL FOR TOILETS AND URINALS:
   a. TOILETS (≤ 1.28 GPF)
   b. LOW-FLOW URINAL (≤ 0.125 GPF)
   c. AERATORS ON LAVATORIES (≤ 0.35 GPM) @ 60 PSI
   d. AERATORS ON KITCHEN SINKS (≤ 0.5 GPM) @ 60 PSI
B. PREREQUISITE – FUNDAMENTAL REFRIGERANT MANAGEMENT
   a. HVAC SYSTEM REFRIGERANT MUST NOT CONTAIN CFC OR HCFC REFRIGERANTS.
C. CREDIT – ENHANCED REFRIGERANT MANAGEMENT:
   a. HVAC SYSTEM REFRIGERANT MUST MINIMIZE OR ELIMINATE THE EMISSION OF COMPOUNDS THAT CONTRIBUTE TO OZONE DEPLETION AND GLOBAL WARMING.
D. EQ CREDIT- LOW EMITTING MATERIALS
   a. SUBMIT GENERAL EMISSIONS EVALUATION USING CALIFORNIA DEPARTMENT OF PUBLIC HEALTH (CDPH) STANDARD METHOD V1.1 FOR VOC EMISSIONS BY VOLUME.
   b. ADHESIVES AND SEALANTS USED ON THE INTERIOR OF THE BUILDING DURING CONSTRUCTION SHALL COMPLY WITH THE VOC LIMITS OF THE SOUTH COAST RULE #1168 BY THE SOUTH COAST AIR QUALITY MANAGEMENT DISTRICT, DATED JULY 1, 2005 AND RULE AMENDMENT DATE OF JANUARY 7, 2005 http://www.aqmd.gov/home/regulations/rules/scaqmd-rule-book/regulation-xi
   VOC LIMITS IN GRAMS PER LITER FOR ADHESIVES AND SEALANTS USED ON INTERIOR OF BUILDING ARE AS FOLLOWS:

	VOC LIMIT (g/L)
WELDING AND INSTALLATION	
INDOOR CARPET ADHESIVES	50
CARPET PAD ADHESIVES	50
WOOD FLOORING ADHESIVES	100
RUBBER FLOOR ADHESIVES	60
SUBFLOOR ADHESIVES	50
CERAMIC TILE ADHESIVES	65
VCT AND ASPHALT TILE ADHESIVES	50
DRYWALL AND PANEL ADHESIVES	50
COVE BASE ADHESIVES	50
MULTIPURPOSE CONSTRUCTION ADHESIVES	70
STRUCTURAL GLAZING ADHESIVES	100
PVC WELDING	510
CPVC WELDING	490
ABS WELDING	325
PLASTIC CEMENT WELDING	250
ADHESIVE PRIMER FOR PLASTIC	550
CONTACT ADHESIVE	80
SPECIAL PURPOSE CONTACT ADHESIVE	250
STRUCTURAL WOOD MEMBER ADHESIVE	140
SHEET APPLIED RUBBER LINING OPERATION	850
TOP & TRIM ADHESIVE	250
SUBSTRATES	
METAL TO METAL	30
PLASTIC FOAMS	50
POROUS MATERIAL EXCEPT WOOD	50
WOOD	30
FIBERGLASS	80
SEALANTS	
ARCHITECTURAL	250
NONMEMBRANE ROOF	300
ROADWAY	250
SINGLE-PLY ROOF MEMBRANE	450
OTHER	250
SEALANT PRIMERS	
ARCHITECTURAL - NONPOROUS	250
ARCHITECTURAL - POROUS	775
OTHER	750

   c. AEROSOL ADHESIVES USED ON THE INTERIOR OF THE BUILDING SHALL COMPLY WITH THE VOC LIMITS OF GREEN SEAL STANDARD FOR COMMERCIAL ADHESIVES GS-36 REQUIREMENTS IN EFFECT ON OCTOBER 19, 2000. VOC LIMITS IN PERCENT BY WEIGHT FOR AEROSOL ADHESIVES USED ON INTERIOR OF BUILDING ARE AS FOLLOWS:

AEROSOL ADHESIVES	
GENERAL PURPOSE SPRAY MIST	65% VOCs BY WEIGHT
GENERAL PURPOSE WEB SPRAY	55% VOCs BY WEIGHT
SPECIAL PURPOSE AEROSOL ADHESIVE	70% VOCs BY WEIGHT

   d. LIMITS ON VOCS IN GRAMS PER LITER FOR CARPET ADHESIVES SHALL COMPLY WITH THE VOC LIMITS SHOWN BELOW:

	VOC LIMIT (g/L)
ADHESIVES	
TOTAL VOCs	50

   e. PAINTS AND COATINGS
   FOR FIELD APPLICATIONS THAT ARE INSIDE THE WEATHERPROOFING SYSTEM, 90 PERCENT OF PAINTS AND COATINGS SHALL COMPLY WITH THE REQUIREMENTS OF THE CALIFORNIA DEPARTMENT OF PUBLIC HEALTH'S "STANDARD METHOD FOR THE TESTING AND EVALUATION OF VOLATILE ORGANIC CHEMICAL EMISSIONS FROM INDOOR SOURCES USING ENVIRONMENTAL CHAMBERS."
   PAINTS APPLIED ON THE INTERIOR OF THE BUILDING SHALL COMPLY WITH GREEN SEAL PRODUCT SPECIFIC ENVIRONMENTAL REQUIREMENTS (HYPERLINK "http://www.greenseal.org/standard/paints.htm" WWW.GREENSEAL.ORG/STANDARD/PAINTS.HTM). THE GREEN SEAL STANDARD IS INTENDED FOR PAINTS AND ANTI-CORROSIVE PAINTS. BOTH INTERIOR AND EXTERIOR PAINTS ARE ADDRESSED BY THE STANDARD, BUT ONLY LIMITS FOR INTERIOR PAINTS APPLY TO A LEED PROJECT. ARCHITECTURAL PAINTS COATING AND PRIMERS APPLIED TO INTERIOR WALLS AS WELL AS ANTI-CORROSIVE PAINTS APPLIED TO INTERIOR FERROUS METAL SHALL NOT EXCEED THE VOC LIMITS SET FORTH IN GREEN SEAL STANDARD GS-11. LIMITS ON VOCS IN GRAMS PER LITER FOR PAINTS AND ANTI-CORROSIVE PAINTS ARE AS FOLLOWS:

INTERIOR COATINGS	VOC LIMIT (g/L)
NON-FLAT	150
FLAT	50
ANTI-CORROSIVE (GREEN SEAL GS-03)	250

   f. CLEAR WOOD FINISHES, FLOOR COATINGS, STAIN, SEALERS AND SHELLACS APPLIED TO INTERIOR ELEMENTS DURING CONSTRUCTION SHALL COMPLY WITH THE VOC LIMITS SET FORTH IN SOUTH COAST AIR QUALITY MANAGEMENT DISTRICT (SCAQMD) RULE 1113, ARCHITECTURAL COATINGS, DATED JANUARY, 2004.

	VOC LIMIT (g/L)
BOND BREAKERS	350
CLEAR WOOD FINISH	350
VARNISH	350
SANDING	350
SEALERS - LACQUER	550
CLEAR BRUSHING LACQUER	680
CONCRETE-CURING COMPOUNDS	350
DRY-FOG COATINGS	400
FIRE-PROOFING EXTERIOR COATINGS	350
FIRE-RETARDANT COATINGS	
CLEAR	650
PIGMENTED	350
FLATS	100
FLOOR COATINGS	100
GRAPHIC ARTS (SIGN) COATINGS	500
INDUSTRIAL MAINTENANCE (IM) COATINGS	250
HIGH TEMPERATURE IM COATING	420
ZINC-RICH IM PRIMERS	340
JAPANS/FAUX FINISHING COATINGS	350
MAGNESITE CEMENT COATINGS	450
MASTIC COATINGS	300
METALLIC PIGMENTED COATINGS	500
MULTICOLOR COATINGS	250
NONFLAT COATINGS	150
PIGMENTED LACQUER	550
PRETREATED WASH PRIMERS	420
PRIMERS, SEALERS, UNDERCOATERS	200
QUICK-DRY ENAMELS	250
QUICK-DRY PRIMERS, SEALERS, UNDERCOATS	200
RECYCLED COATINGS	250
RUST: PREVENTIVE COATINGS	400
SHELLAC	
CLEAR	730
PIGMENTED	550
SPECIALTY PRIMERS	350
STAINS	250
INTERIOR	250
TRAFFIC COATINGS	150
WATERPROOFING SEALERS	250
WATERPROOFING CONCRETE / MASONRY SEALERS	400
WOOD PRESERVATIVES	350
OTHER	

PART 3 – EXECUTION
NOT USED

END OF SECTION 01 81 13

Architect:

brr

ARCHITECT OF RECORD:
BRR ARCHITECTURE, INC
8131 METCALF AVE
SUITE 300
OVERLAND PARK, KS 66204

www.brrarch.com

TEL: 913-262-9095
FAX: 913-262-9044

COPYRIGHT NOTICE
This drawing was prepared for use on a specific site contemporaneously with its issue date and it is not suitable for use on a different project site or at a later time. Use of this drawing for reference or example on another project requires the services of properly licensed architects and engineers. Reproduction of this drawing for reuse on another project is not authorized and may be contrary to the law.

Engineer:

Project Owner:

NIKE, Inc.
One Bowerman Drive
Beaverton, OR 97005
(503) 671-6453
www.nike.com

Project Address:

NIKE FACTORY STORE
WATERFORD LAKES
SHOPPING CENTER
449 N. ALAFAYA TRAIL
ORLANDO, FL 32828
TEMPLATE ISSUE DATE: 11/28/2018

Fixture Package: UNITE

Stamp: NOT FOR CONSTRUCTION

Issued For: PERMIT/BID

Issue Date: 11/06/2020

Revisions:

NO.	REASON	DATE

PROJECT MANAGER: KH
CHECKED BY:
DRAWN BY: RAN

Project Number: 62301411

Sheet Title: ARCHITECTURAL SPECIFICATIONS

Sheet Number: AS1.0

SECTION 01400 - PROJECT COORDINATION

PART 1 GENERAL

1.1 PROJECT MEETINGS

A. PROJECT MEETINGS: SCHEDULE AND ADMINISTER THROUGHOUT PROGRESS OF WORK. A PRE-CONSTRUCTION MEETING IS REQUIRED WITH ALL SUBCONTRACTORS IN ATTENDANCE.

B. ADMINISTRATION: PREPARE AGENDA, CONDUCT MEETINGS AND WRITE AND DISTRIBUTE RECORDED PROCEEDINGS AND DECISIONS TO PARTICIPANTS IN MEETING AND TO PARTIES AFFECTED BY DECISIONS MADE AT THE MEETINGS.

C. NOTIFICATION: GIVE PARTICIPANTS NO FEWER THAN SEVEN (7) DAYS NOTICE OF MEETINGS NOT REGULARLY SCHEDULED.

D. NIKE AND/OR ARCHITECT WILL ATTEND EACH PROJECT MEETINGS. ARCHITECT WILL ASCERTAIN THAT WORK IS EXPEDITED CONSISTENT WITH CONTRACT DOCUMENTS AND CONSTRUCTION SCHEDULE.

SECTION 01500 - TEMPORARY FACILITIES AND CONTROLS

1.1 GENERAL

A. PROVIDE AND MAINTAIN EQUIPMENT SUCH AS SCAFFOLDS, STAGING, LADDERS, STAIRS, RAMPS, RUNWAYS, PLATFORMS, RAILINGS, HOISTS, CRANES, CHUTES AND OTHER EQUIPMENT REQUIRED TO ASSURE SAFETY OF PERSONNEL TO FACILITATE EXECUTION OF WORK.

B. PROVIDE SUFFICIENT WATCHMAN SERVICE TO DETER ILLEGAL ENTRY OR DAMAGE DURING NIGHTS, HOLIDAYS AND OTHER PERIODS WHEN WORK IS NOT BEING EXECUTED.

C. EXECUTE WORK WITH A CONSTANT EFFORT TO ELIMINATE UNNECESSARY NOISE, DUST AND OTHER ANNOYANCES.

D. TEMPORARY WATER AND ELECTRICAL TO BE COORDINATED BY THE TENANT GENERAL CONTRACTOR. BILL TO THE TENANT GENERAL CONTRACTOR.

SECTION 01600 - PRODUCT REQUIREMENTS

1.1 PRODUCT HANDLING

A. EXCEPT AS OTHERWISE APPROVED BY THE ARCHITECT, DETERMINE AND COMPLY WITH MANUFACTURER'S RECOMMENDATIONS ON PRODUCT HANDLING, STORAGE AND PROTECTION.

B. DELIVER PRODUCTS TO THE JOB SITE IN THEIR MANUFACTURER'S ORIGINAL CONTAINER WITH LABELS INTACT AND LEGIBLE. MAINTAIN PACKED MATERIAL WITH SEALS UNBROKEN AND LABELS INTACT UNTIL TIME OF USE.

C. PROMPTLY REMOVE DAMAGED MATERIAL AND UNSUITABLE ITEMS FROM THE JOB SITE AND PROMPTLY REPLACE WITH MATERIAL MEETING THE SPECIFIED REQUIREMENTS AT NO ADDITIONAL COST TO THE OWNER.

D. PROTECT FINISHED SURFACES, INCLUDING JAMBS AN SOFFITS OF OPENINGS USED AS PASSAGEWAYS AND FLOORS THROUGH WHICH EQUIPMENT AND MATERIALS ARE HANDLED.

E. IN THE EVENT OF DAMAGE, PROMPTLY MAKE REPLACEMENTS AND REPAIRS TO THE APPROVAL OF THE ARCHITECT AND AT NO ADDITIONAL COST TO NIKE.

F. ALL DELIVERIES ARE TO BE CLEARLY MARKED WITH TENANT NAME, SPACE NUMBER, TENANT GENERAL CONTRACTOR'S NAME AND PHONE NUMBER.

G. TENANT GENERAL CONTRACTOR IS REQUIRED TO HAVE ADEQUATE PERSONNEL AND EQUIPMENT FOR RECEIVING DELIVERIES.

SECTION 01700 - CLEANING

1.1 GENERAL

A. ALL CLEANING PRACTICES MUST BE COMPLIANT WITH THE SHEET METAL AND AIR CONDITIONING CONTRACTORS NATIONAL ASSOCIATION (SMACNA) IAQ GUIDELINES FOR OCCUPIED BUILDING UNDER CONSTRUCTION, 1995, CHAPTER 3.

B. THROUGHOUT THE CONSTRUCTION PERIOD, MAINTAIN THE CONSTRUCTION AREA IN A STANDARD OF CLEANLINESS AS DESCRIBES IN THIS SECTION.

C. CONDUCT DAILY INSPECTIONS, AND MORE OFTEN IF NECESSARY TO VERIFY THAT REQUIREMENTS FOR CLEANLINESS ARE BEING MET.

D. USE ONLY THE CLEANING MATERIALS AND EQUIPMENT WHICH ARE COMPATIBLE WITH THE SURFACE BEING CLEANED, AND AS RECOMMENDED BY THE MANUFACTURER OF THE MATERIAL.

E. DO NOT ALLOW ACCUMULATION OF SCRAP, DEBRIS, WATER MATERIAL AND OTHER ITEMS NOTE REQUIRED FOR CONSTRUCTION OF THIS WORK.

F. DAILY, AND MORE OFTEN IF NECESSARY, INSPECT THE CONSTRUCTION AREA AND PICK UP ALL SCRAP, DEBRIS AND WASTE MATERIAL. REMOVE SUCH ITEMS TO A PLACE DESIGNATED FOR THEIR STORAGE.

G. AS REQUIRED PREPARATORY TO INSTALLATION OF SUCCEEDING MATERIALS, CLEAN THE SURFACES OF PERTINENT PORTIONS THEREOF TO THE DEGREE OF CLEANLINESS RECOMMENDED BY THE MANUFACTURER OF THE SUCCEEDING MATERIALS, USING EQUIPMENT AND MATERIALS REQUIRED TO ACHIEVE THE NECESSARY CLEANLINESS.

H. PRIOR TO COMPLETION OF THE WORK, REMOVE FROM THE CONSTRUCTION AREA, ALL TOOLS, SURPLUS MATERIALS, EQUIPMENT, SCRAP, DEBRIS AND WASTE. CONDUCT FINAL PROGRESS CLEANING AS DESCRIBED BELOW.

1. VISUALLY INSPECT INTERIOR SURFACES AND REMOVE ALL TRACES OF SOIL, WASTE MATERIALS, SMUDGES AND OTHER FOREIGN MATTER.

2. REMOVE ALL TRACES OF SPLASHED MATERIAL FROM ADJACENT SURFACES.

3. REMOVE PAINT DROPPINGS, SPOTS, STAINS AND DIRT FROM FINISHED SURFACES.

4. CLEAN GLASS ON BOTH SIDES.

5. TO SURFACES REQUIRING ROUTINE APPLICATION OF BUFFED POLISH, APPLY THE POLISH RECOMMENDED BY THE MANUFACTURER OF THE MATERIAL BEING POLISHED.

I. MAINTAIN A STAIN-FREE CONCRETE SLAB. ALL MAN LIFTS ARE TO BE DIAPERED AND ARE TO HAVE NON-MARKING TIRES.

J. RESEAL ALL FLOORS AS PART OF FINAL CLEANING. HIGH SPEED BUFF REQUIRED PRIOR TO OPENING, COORDINATE WITH NIKE PROJECT MANAGER.

1.2 CLEANING PROCEDURE

A. G.C. TO PROVIDE (4) HOUR DAILY CLEANING WITH PROFESSIONAL JANITORIAL CLEANER EVERY DAY WORK OCCURS ON THE PROJECT. G.C. TO SELECT THEIR OWN PROFESSIONAL CLEANING FIRM FOR DAILY CLEANS.

B. G.C. TO CONTRACT WITH SITECREW INC. FOR THE FINAL CLEANING. NO SUBSTITUTIONS ALLOWED. SEE COVER SHEET FOR CONTACT INFORMATION.

C. SITECREW TO FOLLOW CLEANING INSTRUCTIONS PER SECTION 01700.

SECTION 01 74 19
CONSTRUCTION WASTE MANAGEMENT
PART 1 - GENERAL
1.1 RELATED DOCUMENTS

A. DRAWINGS AND GENERAL PROVISIONS OF THE CONTRACT, INCLUDING GENERAL AND SUPPLEMENTARY CONDITIONS AND OTHER DIVISION 1 SPECIFICATION SECTIONS, APPLY TO THIS SECTION.

B. THIS SECTION DESCRIBES DEMOLITION AND CONSTRUCTION WASTE MANAGEMENT AND RECYCLING GOALS AND INCLUDES ADMINISTRATIVE AND PROCEDURAL REQUIREMENTS FOR THE DEVELOPMENT AND EXECUTION OF A CONSTRUCTION WASTE MANAGEMENT PLAN.

C. RELATED SECTIONS INCLUDE THE FOLLOWING:

1. DIVISION 1 SECTION "ENVIRONMENTAL PROCEDURES" FOR ADMINISTRATIVE PROCEDURES TO ACHIEVE ENVIRONMENTAL GOALS FOR THE WORK.

2. DIVISION 1 SECTION "TEMPORARY FACILITIES AND CONTROLS" REQUIREMENTS FOR INSTALLATION, MAINTENANCE AND REMOVAL OF TEMPORARY UTILITIES, CONTROLS, AND FACILITIES DURING CONSTRUCTION.

3. DIVISION 2 SECTION "SITE DEMOLITION" REQUIREMENTS FOR SALVAGE AND RECYCLING OF DEMOLITION DEBRIS.

1.2 CONSTRUCTION WASTE MANAGEMENT GOALS

A. THE OWNER HAS ESTABLISHED THAT THIS PROJECT SHALL GENERATE THE LEAST AMOUNT OF WASTE POSSIBLE AND THAT PROCESSES THAT ENSURE THE GENERATION OF AS LITTLE WASTE AS POSSIBLE DUE TO ERROR, POOR PLANNING, BREAKAGE, MISHANDLING, CONTAMINATION, OR OTHER FACTORS SHALL BE EMPLOYED.

B. OF THE INEVITABLE WASTE THAT IS GENERATED, AS MANY OF THE WASTE MATERIALS AS ECONOMICALLY FEASIBLE SHALL BE REUSED, SALVAGED, OR RECYCLED. WASTE DISPOSAL IN LANDFILLS SHALL BE MINIMIZED.

C. DIVERSION GOAL: A MINIMUM **[50%]** [75%] [90%] OF THE WASTE OF THREE MATERIAL STREAMS SHALL BE DIVERTED FROM THE LANDFILL.

D. IDENTIFY IF THESE MATERIALS WILL BE SEPARATED ON SITE OR COMMINGLED AND DESCRIBE THE SEPARATION STRATEGIES

E. WITH REGARD TO THESE GOALS THE CONTRACTOR SHALL DEVELOP, FOR THE OWNER AND ARCHITECT'S REVIEW, A WASTE MANAGEMENT PLAN FOR THIS PROJECT.

1.3 SUBMITTALS

A. CONSTRUCTION WASTE MANAGEMENT PLAN

B. MONTHLY AND FINAL SUMMARY REPORT OF WASTE MATERIALS RECYCLED, SALVAGED AND LANDFILLED.

C. WEIGHT TICKETS FOR ALL WASTE MATERIALS REMOVED FROM THE SITE DURING DEMOLITION AND CONSTRUCTION.

1.4 CONSTRUCTION WASTE MANAGEMENT PLAN

A. DRAFT WASTE MANAGEMENT PLAN: PRIOR TO THE PRE-CONSTRUCTION CONFERENCE, OR PRIOR TO ANY WASTE REMOVAL, WHICHEVER OCCURS SOONER, THE CONTRACTOR SHALL MEET WITH THE OWNER DESIGNATED REPRESENTATIVE(S) AND ARCHITECT TO DISCUSS PREPARATION OF A DRAFT WASTE MANAGEMENT PLAN. THE DRAFT PLAN SHALL CONTAIN THE FOLLOWING:

1. IDENTIFY AT LEAST THREE CONSTRUCTION OR DEMOLITION MATERIAL STREAMS FOR DIVERSION FROM LANDFILL.

2. COMMINGLED RECYCLING RATHER THAN ON-SITE SEPARATION REQUIRES A SUMMARY OF THE AVERAGE DIVERSION RATES OF THE RECYCLING FACILITY. NOTE THAT VISUAL INSPECTION IS NOT AN ACCEPTABLE FORM OF FACILITY MEASUREMENT. IF THE AVERAGE ANNUAL RECYCLING RATE FOR THE SPECIFIC SORTING FACILITY IS USED, THE FACILITY'S METHOD OF RECORDING AND CALCULATING THE RECYCLING RATE MUST BE REGULATED BY A LOCAL OR STATE GOVERNMENT AUTHORITY.

3. TRANSPORTATION: A DESCRIPTION OF THE MEANS OF TRANSPORTATION OF THE RECYCLABLE MATERIALS (WHETHER MATERIALS WILL BE SITE-SEPARATED AND SELF-HAULED TO DESIGNATED CENTERS, OR WHETHER MIXED MATERIALS WILL BE COLLECTED BY A WASTE HAULER AND REMOVED FROM THE SITE) AND DESTINATION OF MATERIALS. THE FINAL DESTINATION MUST BE APPROVED BY OWNER DESIGNATED REPRESENTATIVE(S).

4. SOURCE REDUCTION: LIST PROCESSES THAT MINIMIZE WASTE SUCH AS WORKING WITH SUPPLIERS TO TAKE BACK OR BUY BACK SUBSTANDARD, REJECTED OR UNUSED ITEMS AND TO DELIVER SUPPLIES USING RETURNABLE PALLETS AND CONTAINERS. ALSO INCLUDE PROCEDURES TO MINIMIZE BREAKAGE, MISHANDLING, CONTAMINATION, AND OTHER FACTORS THAT REDUCE JOB SITE WASTE.

5. MEETINGS: A DESCRIPTION OF THE REGULAR MEETINGS TO BE HELD TO ADDRESS WASTE MANAGEMENT. CONTRACTOR SHALL CONDUCT CONSTRUCTION WASTE MANAGEMENT MEETINGS. MEETINGS SHALL INCLUDE SUBCONTRACTORS AFFECTED BY THE WASTE MANAGEMENT PLAN AS WELL AS OWNER DESIGNATED REPRESENTATIVE(S). AT A MINIMUM, WASTE MANAGEMENT GOALS AND ISSUES SHALL BE DISCUSSED AT THE FOLLOWING MEETINGS: PRE-BID MEETING, PRE-CONSTRUCTION MEETING, AND REGULARLY SCHEDULED JOB-SITE MEETINGS.

6. INDICATE ANY INSTANCE WHERE COMPLIANCE WITH REQUIREMENTS OF THIS SPECIFICATION DOES NOT APPEAR TO BE POSSIBLE AND REQUEST RESOLUTION FROM THE OWNER AND ARCHITECT.

B. WASTE MANAGEMENT PLAN REVIEW MEETING: ONCE THE OWNER AND ARCHITECT HAVE REVIEWED THE DRAFT WASTE MANAGEMENT PLAN AND PRIOR TO ANY WASTE REMOVAL AT THE SITE, SCHEDULE AND CONDUCT A FOLLOW-UP MEETING AGREED UPON DURING THE MEETING IDENTIFIED IN ITEM 1.5 A. THE PURPOSE OF THE MEETING IS TO REVIEW THE DRAFT WASTE MANAGEMENT PLAN AND DISCUSS PROCEDURES, SCHEDULES AND SPECIFIC REQUIREMENTS FOR WASTE MATERIALS RECYCLING AND DISPOSAL. DISCUSS COORDINATION AND INTERFACE BETWEEN THE CONTRACTOR AND OTHER CONSTRUCTION ACTIVITIES. IDENTIFY AND RESOLVE POTENTIAL COMPLIANCE PROBLEMS WITH REQUIREMENTS. RECORD MINUTES OF THE MEETING, IDENTIFYING ALL CONCLUSIONS REACHED AND MATTERS REQUIRING FURTHER RESOLUTION.

1. ATTENDEES: THE CONTRACTOR AND RELATED CONTRACTOR PERSONNEL ASSOCIATED WITH THE WORK OF THIS SECTION, INCLUDING PERSONNEL TO BE IN CHARGE OF THE WASTE MANAGEMENT PROGRAM, ARCHITECT, OWNER AND SUCH ADDITIONAL PERSONNEL AS THE ARCHITECT OR OWNER DEEM APPROPRIATE.

C. FINAL CONSTRUCTION WASTE MANAGEMENT PLAN: MAKE ANY REVISIONS TO THE DRAFT WASTE MANAGEMENT PLAN AGREED UPON DURING THE MEETING ABOVE AND INCORPORATE RESOLUTIONS AGREED TO BE MADE SUBSEQUENT TO THE MEETING. SUBMIT THE REVISED PLAN TO THE OWNER AND ARCHITECT FOR APPROVAL WITHIN 10 CALENDAR DAYS OF THE MEETING.

1.5 QUALITY ASSURANCE:

A. REGULATORY REQUIREMENTS
COMPLY WITH APPLICABLE REQUIREMENTS OF THE STATE, LOCAL ORDINANCES AND REGULATIONS CONCERNING MANAGEMENT OF CONSTRUCTION, CLEARING, AND INERT MATERIALS.

B. DISPOSAL SITE, RECYCLES AND WASTE MATERIALS PROCESSORS
USE ONLY FACILITIES PROPERLY PERMITTED BY THE STATE, AND/OR BY LOCAL AUTHORITIES WHERE APPLICABLE.

C. THE CONTRACTOR WILL BE RESPONSIBLE FOR ENSURING THAT THE APPROPRIATE GOVERNMENTAL ENTITIES ARE NOTIFIED OF THE WORK.

D. REMOVE AND RELOCATE REUSABLE MATERIALS TO BE REINSTALLED OR RETAINED IN A MANNER TO PREVENT DAMAGE OR CONTAMINATION.

E. ARRANGE FOR ADEQUATE COLLECTION, AND TRANSPORTATION TO DELIVER THE RECOVERED MATERIALS TO THE APPROVED RECYCLING CENTER OR PROCESSING FACILITY. MAINTAIN RECORDS ACCESSIBLE TO THE ARCHITECT OR C&D QUALITY MANAGER FOR VERIFICATION OF DIVERSION OF RECOVERED WASTE MATERIALS.

1.6 STORAGE AND HANDLING:

A. SITE STORAGE

1. CHANGE-OUT LOADED CONTAINERS FOR EMPTY CONTAINERS, AS DEMAND REQUIRES.

2. IF RECOVERED MATERIALS ARE STORED ON-SITE FOR PROJECT DURATION PROVIDE ADEQUATE SECURITY FROM PILFERAGE.

3. TENANT CONTRACTOR TO PROVIDE STORAGE CONTAINERS FOR FIXTURES AND CONSTRUCTION MATERIALS. TENANT CONTRACTOR TO ORDER, PAY AND PROCESS STORAGE CONTAINER LEASE WITH LANDLORD AS REQUIRED. COORDINATE PLACEMENT WITH MALL MAINTENANCE MANAGER. CONTAINER TO BE PLACED ON PLYWOOD TO PROTECT ASPHALT. AREA AROUND STORAGE CONTAINERS ARE TO BE KEPT CLEAN AND FREE OF DEBRIS.

B. HANDLING

1. DEPOSIT INDICATED RECYCLABLE, AND RECOVERABLE MATERIALS IN STORAGE AREAS OR CONTAINERS IN A CLEAN (NO MUD, ADHESIVE, SOLVENTS, PETROLEUM CONTAMINATION), DEBRIS-FREE CONDITION. DO NOT DEPOSIT CONTAMINATED MATERIALS INTO THE CONTAINERS UNTIL SUCH TIME AS SUCH MATERIALS HAVE BEEN CLEANED.

2. INSURE ALL RECOVERED MATERIALS ARE MADE SAFE FOR HANDLING AND STORAGE.

3. IF THE CONTAMINATION CHEMICALLY COMBINES WITH THE MATERIAL SO THAT IT CANNOT BE CLEANED, DO NOT DEPOSIT INTO THE RECYCLE CONTAINERS. IN SUCH CASE, REQUEST RESOLUTION BY THE QUALITY MANAGER FOR DISPOSAL OF THE CONTAMINATED MATERIAL. DIRECTIONS FROM THE QUALITY MANAGER DO NOT RELIEVE THE CONTRACTOR OF RESPONSIBILITY FOR COMPLIANCE WITH ALL LEGAL AND REGULATORY REQUIREMENTS FOR DISPOSAL, NOR SHALL SUCH DIRECTIONS CAUSE A REQUEST FOR MODIFICATION OF THE CONTRACT.

PART 2 - PRODUCTS

2.1 SALVAGED AND REUSE MATERIALS PRODUCTS:
THE FOLLOWING MATERIAL TO BE SALVAGED OR REUSED:

A. THE FOLLOWING COMPONENTS AND FIXTURES ARE COLLECTED FOR REUSE, UNLESS NOTED OTHERWISE IN THE DRAWINGS:

1. PLUMBING FIXTURES

2. WINDOWS

3. DOORS

4. CABINETS

5. MILLWORK, PANELING AND OTHER SIMILAR INTERIOR FINISHES

6. ELECTRIC FIXTURES, MOTORS, SWITCH GEAR AND OTHER SIMILAR EQUIPMENT

7. HVAC EQUIPMENT, DUCT WORK, CONTROL SYSTEMS, SWITCHES AND OTHER SIMILAR EQUIPMENT

8. ARCHITECTURAL FIXTURES

9. OTHERS AS APPROPRIATE

B. WOOD COLLECTED FOR REUSE IS SORTED BY:

1. TYPE

2. SIZE, DIMENSION

3. PROTECTED FROM THE GROUND, BENDING, AND MOISTURE

PART 3 - EXECUTION

3.1 IMPLEMENTATION OF CONSTRUCTION WASTE MANAGEMENT PLAN

A. MANAGER: THE CONTRACTOR SHALL DESIGNATE AN ON-SITE PARTY (OR PARTIES) RESPONSIBLE FOR INSTRUCTING WORKERS AND OVERSEEING AND DOCUMENTING RESULTS OF THE WASTE MANAGEMENT PLAN FOR THE PROJECT.

B. INSTRUCTION: THE CONTRACTOR SHALL PROVIDE ON-SITE INSTRUCTION OF APPROPRIATE SEPARATION, HANDLING, AND RECYCLING, SALVAGE, REUSE, AND RETURN METHODS TO BE USED BY ALL PARTIES AT THE APPROPRIATE STAGES OF THE PROJECT.

C. SEPARATION FACILITIES: THE CONTRACTOR SHALL LIE OUT AND LABEL A SPECIFIC AREA TO FACILITATE SEPARATION OF MATERIALS FOR POTENTIAL RECYCLING, SALVAGE, REUSE, AND RETURN. RECYCLING AND WASTE BIN AREAS ARE TO BE KEPT NEAT AND CLEAN AND CLEARLY MARKED IN ORDER TO AVOID CONTAMINATION OF MATERIALS.

D. HAZARDOUS WASTE: HAZARDOUS WASTES SHALL BE SEPARATED, STORED, AND DISPOSED OF ACCORDING TO LOCAL REGULATIONS.

E. APPLICATION FOR PROGRESS PAYMENTS: THE CONTRACTOR SHALL SUBMIT WITH EACH APPLICATION FOR PROGRESS PAYMENT A SUMMARY OF WASTE GENERATED BY THE PROJECT. FAILURE TO SUBMIT THIS INFORMATION SHALL RENDER THE APPLICATION FOR PAYMENT INCOMPLETE AND SHALL DELAY PROGRESS PAYMENT. THE SUMMARY SHALL BE SUBMITTED ON A FORM ACCEPTABLE TO THE OWNER AND SHALL CONTAIN THE FOLLOWING INFORMATION:

1. THE AMOUNT OF WASTE (IN TONS) LANDFILLED FROM THE PROJECT AND THE IDENTITY OF THE TRANSFER STATION/LANDFILL. INCLUDE WEIGHT TICKETS OR ANOTHER MEANS OF PROOF TO SUBSTANTIATE THE AMOUNT OF WASTE SENT TO THE LANDFILL SUCH AS A MONTHLY REPORT FROM THE HAULER OR INDIVIDUAL RECEIVING PARTIES.

2. FOR EACH MATERIAL RECYCLED, REUSED, OR SALVAGED FROM THE PROJECT, THE AMOUNT (IN TONS), THE DATE REMOVED FROM THE JOBSITE, THE RECEIVING PARTY. INCLUDE WEIGHT TICKETS OR ANOTHER MEANS OF PROOF TO SUBSTANTIATE THE AMOUNT OF WASTE DIVERTED FROM THE LANDFILL SUCH AS A MONTHLY REPORT FROM THE HAULER OR INDIVIDUAL RECEIVING PARTIES.

F. AT THE END OF THE PROJECT THE CONTRACTOR SHALL SUBMIT A FINAL WASTE MANAGEMENT REPORT. THE REPORT SHALL BE SUBMITTED ON A FORM ACCEPTABLE TO THE OWNER AND SHALL CONTAIN THE FOLLOWING INFORMATION:

1. THE TOTAL AMOUNT (IN TONS) OF WASTE LANDFILLED FROM THE PROJECT AND THE HAULER OR LOCATION WHERE THE WASTE WAS DELIVERED.

2. THE TOTAL AMOUNT (IN TONS) OF EACH MATERIAL RECYCLED, REUSED, OR SALVAGED FROM THE PROJECT AND THE HAULER OR LOCATION WHERE THE WASTE WAS DIVERTED.

3. THE TOTAL PERCENTAGE OF MATERIAL RECYCLED IN TONS OR CUBIC FEET.

END OF SECTION 01 74 19

Architect:

brr

ARCHITECT OF RECORD:
BRR ARCHITECTURE, INC
8131 METCALF AVE
SUITE 300
OVERLAND PARK, KS 66204

www.brrarch.com

TEL: 913-262-9095
FAX: 913-262-9044

COPYRIGHT NOTICE

This drawing was prepared for use on a specific site contemporaneously with its issue date and it is not suitable for use on a different project site or at a later time. Use of this drawing for reuse on another project or another project requires the services of properly licensed architects and engineers. Reproduction of this drawing for reuse on another project is not authorized and may be contrary to the law.

Engineer:

Project Owner:

NIKE, Inc.
One Bowerman Drive
Beaverton, OR 97005
(503) 671-6453
www.nike.com

Project Address:

NIKE FACTORY STORE
WATERFORD LAKES
SHOPPING CENTER
449 N. ALAFAYA TRAIL
ORLANDO, FL 32828
TEMPLATE ISSUE DATE: 11/28/2018

Fixture Package:

UNITE

Stamp:

NOT FOR CONSTRUCTION

Issued For:

PERMIT/BID

Issue Date:

11/06/2020

Revisions:

NO.	REASON	DATE

PROJECT MANAGER:
KH
CHECKED BY:
DRAWN BY:
RAN

Project Number:

62301411

Sheet Title:

ARCHITECTURAL SPECIFICATIONS

Sheet Number:

AS2.0

SECTION 01800 - PROJECT CLOSEOUT

1.1 GENERAL

A. PUNCH LIST: CONTRACTOR, UPON COMPLETION OF WORK SHALL NOTIFY NIKE AND CONSTRUCTION PROJECT MANAGER AND SCHEDULE A WALK-THRU INSPECTION. UPON COMPLETION OF INSPECTION THE CONSTRUCTION PROJECT MANAGER WILL ISSUE A FORMAL REPORT.

B. IT IS THE CONTRACTOR'S RESPONSIBILITY TO CORRECT ALL DEFECTS IN MATERIAL AND/OR WORKMANSHIP NOTED DURING SAID INSPECTION AT NO ADDITIONAL COST TO THE OWNER WITHIN A PERIOD OF TIME AGREEABLE TO NIKE.

C. CONTRACTOR SHALL NOTIFY NIKE AND ARCHITECT UPON COMPLETION OF ALL PUNCH LIST ITEMS AND A FINAL INSPECTION SHALL THEN BE CONDUCTED TO VERIFY THEIR CORRECTION. FINAL PAYMENT REQUESTS CANNOT BE PROCESSED UNTIL ALL ITEMS ON THE PUNCH LIST HAVE BEEN COMPLETED TO THE SATISFACTION OF NIKE AND THE ARCHITECT.

D. FOLLOWING FINAL PUNCH, G.C. IS TO COVER INTERIOR OF ALL STOREFRONT GLAZING WITH PAPER (WHITE OR KRAFT) ONE (1) DAY PRIOR TO SCHEDULED "TURNOVER' DATE.

E. FILE FOLLOWING WITH OWNER PRIOR TO FINAL PAYMENT:

1. WARRANTIES

2. LIENS: RELEASE OR WAIVER AS REQUIRED UNDER CONTRACT DOCUMENTS.

3. CONTRACTOR SHALL FILE A "NOTICE OF COMPLETION" RECORDED WITH THE LOCAL AUTHORITIES AS REQUIRED UPON COMPLETION OF HIS WORK.

4. BONDS AND SPECIAL SERVICE MAINTENANCE CONTRACTS: AS SPECIFIED, EXECUTED BY EACH SUBCONTRACTOR, MANUFACTURER AND SUPPLIER AS APPLICABLE.

5. RECORDED DRAWINGS:

a. KEEP MARKED-UP UP-TO-DATE SET OF CONSTRUCTION DRAWINGS ON SITE AS AN ACCURATE RECORD OF CHANGES AND DEVIATIONS BETWEEN WORK AS SHOWN AND INSTALLED.

b. UPON COMPLETION OF WORK, FURNISH THE ARCHITECT WITH A COMPLETE SET OF MARKED-UP REPRODUCIBLES WITH "RECORD DOCUMENTS" CLEARLY PRINTED IN LOWER RIGHT HAND CORNER OF EACH SHEET. TRANSFER ALL CHANGES AND DEVIATIONS FROM CONSTRUCTION SET TO "RECORD DOCUMENT" SET.

c. SIGN EACH FINAL RECORD DRAWING. NOTE THEREON THAT RECORD DOCUMENTS ARE COMPLETED AND ACCURATE.

1.2 CLOSE OUT PACKAGE REQUIREMENTS

ALL OF THE FOLLOWING ITEMS SHALL BE COMPLETED BEFORE FINAL COMPLETION IS CERTIFIED AND RETENTION IS RELEASED TO THE CONTRACTOR. IT IS THE TENANT'S OBLIGATION TO SECURE ALL DOCUMENTS FROM THE CONTRACTOR THAT ARE REQUIRED UNDER THIS SECTION.

A. PROJECT CLOSEOUT DOCUMENTS: ALL ITEMS SHALL BE SUBMITTED TOGETHER IN ONE INDEXED 3-RING BINDER WITH SECTIONAL TABS AS IDENTIFIED BELOW. BINDER TO BE IDENTIFIED AND LABELED WITH PROJECT NAME AND GENERAL CONTRACTOR. THE CONTRACTOR SHALL PROVIDE ONE (1) COPY TO THE TENANT'S PROJECT MANAGER. PROJECT CLOSEOUT DOCUMENTS SHALL INCLUDE, BUT NOT BE LIMITED TO:

1. OPERATIONS MANUALS FOR ALL RELEVANT EQUIPMENT INSTALLED IN TENANT IMPROVEMENT WORK

2. A LIST OF ALL ROOF EQUIPMENT INSTALLED IN TENANT IMPROVEMENT WORK, WITH SERIAL NUMBERS AND MODEL NUMBERS OF EACH PIECE OF EQUIPMENT

3. GUARANTEES FOR ALL RELEVANT EQUIPMENT INSTALLED IN TENANT IMPROVEMENT WORK

4. WRITTEN ONE-YEAR WARRANTEES FROM CONTRACTOR AND SUBCONTRACTORS

5. A SWORN AFFIDAVIT LIST OF ALL CONTRACTORS AND SUBCONTRACTORS WHO PERFORMED TENANT IMPROVEMENT WORK ON THE PROJECT, INCLUDING COMPANY NAME, ADDRESS, TELEPHONE AND FAX NUMBERS AND CONTACT PERSON'S NAME; CONTRACT AMOUNTS AND ZERO BALANCE DUE CONFIRMATIONS.

6. A COPY OF THE BUILDING PERMIT IF A SEPARATE PERMIT WAS OBTAINED FOR TENANT IMPROVEMENT WORK

7. A COPY OF THE CERTIFICATE OF SUBSTANTIAL COMPLETION FOR TENANT IMPROVEMENT WORK

8. A COPY OF THE CERTIFICATE OF OCCUPANCY (OR TEMPORARY CERTIFICATE OF OCCUPANCY) IF OCCUPANCY WAS IMPACTED BY TENANT IMPROVEMENT WORK

9. A COPY OF ALL OPERATING PERMITS FOR EQUIPMENT INSTALLED IN TENANT IMPROVEMENT WORK AS REQUIRED BY LOCAL AUTHORITIES

10. A COPY OF THE FINAL PUNCH LIST WITH ALL ITEMS SIGNED OFF BY THE TENANT PROJECT MANAGER

11. A CURRENT CHANGE ORDER LOG RECAPPING ALL EXTRAS HAVE BEEN DOCUMENTED AND APPROVED

12. HVAC CERTIFIED AND INDEPENDENT AIR BALANCE REPORT.

13. A COPY OF ALL LEED CREDIT DOCUMENTATION IN ELECTRONIC FORMAT. REFER TO DIVISION 1 LEED REQUIREMENTS AND SUBMITTAL SECTIONS UNDER EACH DIVISION.

B. FINAL UNCONDITIONAL WAIVERS AND LIEN RELEASES FROM THE TENANT'S CONTRACTOR AND SUBCONTRACTORS.

C. AS-BUILT DRAWINGS: CONTRACTOR SHALL PROVIDE SUFFICIENT COPIES TO THE PROJECT MANAGER FOR DISTRIBUTION AS FOLLOWS:

1. ONE SET OF AS-BUILT CONSTRUCTION DOCUMENTS AND ONE SET OF APPROVED FIRE SPRINKLER AS-BUILT DRAWINGS TO THE TENANT'S PROJECT MANAGER

2. ONE SET OF AS-BUILT CONSTRUCTION DOCUMENTS AND ONE SET OF APPROVED FIRE SPRINKLER AS-BUILT DRAWINGS TO THE TENANT'S ARCHITECT

D. THE STORE MANAGER SHALL PROVIDE A SIGNED ACKNOWLEDGMENT OF RECEIPT TO THE TENANT'S PROJECT MANAGER, TO BE FORWARDED TO THE LANDLORD, FOR THE FOLLOWING ITEMS:

1. RECEIPT OF "ATTIC STOCK" MATERIAL

2. RECEIPT OF CONTRACT CLOSEOUT DOCUMENTS

3. SIGNED ACKNOWLEDGMENT THAT THE STORE MANAGER AND OTHER KEY PERSONNEL HAVE RECEIVED INSTRUCTIONS IN THE OPERATION AND "TROUBLESHOOTING" OF ALL SYSTEM AND EQUIPMENT.

SECTION 019100 – COMMISSIONING REQUIREMENTS
RELATED LEED® CREDIT

LEED v4 ID+C: RETAIL – FUNDAMENTAL COMMISSIONING AND VERIFICATION PREREQUISITE

LEED v4 ID+C: RETAIL – ENHANCED COMMISSIONING, OPTION 1 CREDIT

PART 1 - GENERAL

1.1 GENERAL

A. COMMISSIONING (CX) IS A COMPREHENSIVE AND SYSTEMATIC QUALITY ASSURANCE PROCESS TO VERIFY THAT THE BUILDING'S ENERGY RELATED SYSTEMS ARE INSTALLED, CALIBRATED AND PERFORM PER THE OWNER'S PROJECT REQUIREMENTS (OPR), ENGINEER'S BASIS OF DESIGN (BOD), AND CONSTRUCTION DOCUMENTS.

B. THE OWNER IS PLANNING TO ACHIEVE A LEED CERTIFICATION FOR THIS PROJECT. THE INTENT OF THE LEED COMMISSIONING PROCESS IS TO SUPPORT THE DESIGN, CONSTRUCTION, AND EVENTUAL OPERATION OF THE PROJECT THAT MEETS THE OWNER'S PROJECT REQUIREMENTS FOR ENERGY, WATER, INDOOR ENVIRONMENTAL QUALITY AND DURABILITY. THIS IS ACCOMPLISHED WITH THE FOLLOWING ACTIVITIES:
1. DEVELOP THE OWNER'S PROJECT REQUIREMENTS (OPR)
2. DEVELOP THE BASIS OF DESIGN (BOD)
3. DEVELOP A COMMISSIONING PLAN
4. COMMISSIONING FOCUSED REVIEW OF THE OPR, BOD AND DESIGN DOCUMENTS
5. CONDUCTING COMMISSIONING MEETINGS
6. COMMISSIONING FOCUSED REVIEW OF CONTRACTOR SUBMITTALS
7. DEVELOPING AND CONDUCTING PREFUNCTIONAL/START-UP CHECKS AND TESTS
8. DEVELOPING AND EXECUTING FUNCTIONAL ACCEPTANCE TESTS
9. DOCUMENTING FINDINGS AND MAINTAINING A COMMISSIONING OBSERVATIONS LOG
10. TRAINING THE OWNER'S STAFF
11. PREPARING A SUMMARY COMMISSIONING REPORT
12. COMPILING CURRENT FACILITY REQUIREMENTS AND AN OPERATIONS AND MAINTENANCE PLAN
13. DEVELOPING AND COMPILING A SYSTEMS MANUAL
14. DEVELOPING AN ONGOING COMMISSIONING PLAN
15. CONDUCTING SEASONAL TESTING IF REQUIRED AND CONDUCTING A REVIEW OF BUILDING OPERATIONS WITHIN 10-MONTHS OF SUBSTANTIAL COMPLETION

C. THE COMMISSIONING PROCESS DOES NOT TAKE AWAY FROM OR REDUCE THE RESPONSIBILITY OF THE SYSTEM DESIGNERS OR INSTALLING CONTRACTORS TO PROVIDE A FINISHED AND FULLY FUNCTIONING PRODUCT.

D. COMMISSIONING PROCESS ACTIVITIES SHALL BE COMPLETED FOR THE FOLLOWING BUILDING ENERGY SYSTEMS (AS APPLICABLE):
1. MECHANICAL, INCLUDING HVAC&R EQUIPMENT AND CONTROLS
2. PLUMBING, INCLUDING DOMESTIC HOT WATER SYSTEMS, PUMPS, AND CONTROLS
3. ELECTRICAL, INCLUDING SERVICE, DISTRIBUTION, LIGHTING, AND CONTROLS, INCLUDING DAYLIGHTING CONTROLS
4. RENEWABLE ENERGY SYSTEMS DEDICATED TO THE PROJECT SPACE

1.2 COORDINATION

A. COMMISSIONING TEAM (ABBREVIATION):
1. ARCHITECT AND DESIGN ENGINEERS – DESIGN TEAM (A/E)
2. CONTROLS CONTRACTOR (CC)
3. COMMISSIONING AUTHORITY (CXA)
4. DESIGN BUILD CONTRACTORS (DBC)
5. ELECTRICAL CONTRACTOR (EC)
6. GENERAL CONTRACTOR (GC)
7. MECHANICAL, ELECTRICAL AND PLUMBING CONTRACTORS (MEP)
8. OWNER / OWNER'S TECHNICAL STAFF (OS)
9. OWNER'S DESIGNATED PROJECT MANAGER (PM)
10. TEST AND BALANCE CONTRACTOR (TAB)

B. CXA QUALIFICATIONS: BY THE END OF THE DESIGN DEVELOPMENT PHASE, ENGAGE A COMMISSIONING AUTHORITY WITH THE FOLLOWING QUALIFICATIONS:
1. THE CXA MUST HAVE DOCUMENTED COMMISSIONING PROCESS EXPERIENCE ON AT LEAST TWO BUILDING PROJECTS WITH A SIMILAR SCOPE OF WORK. THE EXPERIENCE MUST EXTEND FROM EARLY DESIGN PHASE THROUGH AT LEAST 10 MONTHS OF OCCUPANCY.
2. THE CXA MAY NOT BE AN EMPLOYEE OF THE DESIGN OR CONSTRUCTION FIRM NOR A SUBCONTRACTOR TO THE CONSTRUCTION FIRM.

C. MANAGEMENT: THE CXA IS HIRED BY THE OWNER OR THE OWNER'S REPRESENTATIVE. THE CXA DIRECTS AND COORDINATES THE COMMISSIONING ACTIVITIES. ALL MEMBERS WORK TOGETHER TO FULFILL THEIR CONTRACTED RESPONSIBILITIES AND MEET THE OBJECTIVES OF THE CONTRACT DOCUMENTS. THE CXA'S RESPONSIBILITIES ARE THE SAME REGARDLESS OF WHO HIRED THE CXA.

D. SCHEDULING: THE CXA WILL WORK WITH AND PROVIDE SUFFICIENT NOTICE TO THE PM AND GC TO SCHEDULE COMMISSIONING ACTIVITIES. THE GC WILL INTEGRATE ALL COMMISSIONING ACTIVITIES INTO THE MASTER SCHEDULE. ALL PARTIES WILL ADDRESS SCHEDULING ON AN ONGOING BASIS AND MAKE NECESSARY NOTIFICATIONS IN A TIMELY MANNER TO EXPEDITE THE COMMISSIONING PROCESS.

1.3 RELATED WORK
RELATED SPECIFICATION SECTIONS, DRAWINGS OF THE CONTRACT, INCLUDING SUPPLEMENTARY CONDITIONS, AND OTHER DIVISION / SPECIFICATION, APPLY TO THE WORK OF THIS SECTION.

1.4 COMMISSIONING PROCESS

A. COMMISSIONING DURING DESIGN, CONSTRUCTION, ACCEPTANCE, AND WARRANTY PHASES IS INTENDED TO ACHIEVE THE FOLLOWING OBJECTIVES:
1. VERIFY AND DOCUMENT EQUIPMENT AND SYSTEMS ARE INSTALLED AND STARTED PER MANUFACTURER'S RECOMMENDATIONS AND TO INDUSTRY ACCEPTED MINIMUM STANDARDS.
2. VERIFY AND DOCUMENT EQUIPMENT AND SYSTEMS RECEIVE COMPLETE OPERATIONAL CHECKOUT BY INSTALLING CONTRACTORS.
3. VERIFY AND DOCUMENT EQUIPMENT AND SYSTEM PERFORMANCE.
4. MEET THE INTENT OF AND QUALIFY FOR LEED ENERGY AND ATMOSPHERE PREREQUISITE, FUNDAMENTAL COMMISSIONING AND VERIFICATION.
5. MEET THE INTENT OF AND QUALIFY FOR LEED ENERGY AND ATMOSPHERE CREDIT, ENHANCED COMMISSIONING, OPTION 1.

1.5 COMMISSIONING TEAM RESPONSIBILITIES

A. THE RESPONSIBILITIES OF VARIOUS PARTIES IN THE COMMISSIONING PROCESS ARE PROVIDED IN THIS SECTION. IT IS NOTED THAT THE SERVICES FOR THE PROJECT MANAGER, CONSTRUCTION MANAGER, ARCHITECT, MECHANICAL AND ELECTRICAL DESIGNERS/ENGINEERS ARE NOT PROVIDED FOR IN THIS CONTRACT. THAT IS, THE CONTRACTOR IS NOT RESPONSIBLE FOR PROVIDING THEIR SERVICES. THEIR RESPONSIBILITIES ARE LISTED HERE TO CLARIFY THE COMMISSIONING PROCESS.

B. DESIGN TEAM (A/E) RESPONSIBILITIES:
1. DESIGN, CONSTRUCTION AND ACCEPTANCE PHASE:
A. ATTEND COMMISSIONING SCOPING MEETING, CONTROLS INTEGRATION MEETING AND ADDITIONAL MEETINGS, AS NECESSARY.
B. COMPLETE THE BASIS OF DESIGN (BOD) DOCUMENTATION, ASSIST WITH DEVELOPMENT OF THE OWNER'S PROJECT REQUIREMENTS (OPR) DOCUMENT AND SEQUENCE OF OPERATION DOCUMENTATION AS REQUIRED BY CXA.
C. PERFORM NORMAL SUBMITTAL REVIEW, CONSTRUCTION OBSERVATION, AS-BUILT DRAWING PREPARATION, ETC., AS CONTRACTED.
D. ASSIST IN RESOLUTION OF SYSTEM DEFICIENCIES IDENTIFIED DURING COMMISSIONING.
E. REVIEW AND APPROVE OPERATIONS AND MAINTENANCE MANUALS (O&M).
2. WARRANTY PERIOD: REFER TO SECTION 3.12, BUILDING OPERATIONS REVIEW

C. COMMISSIONING AGENT (CXA) RESPONSIBILITIES:
1. DESIGN, CONSTRUCTION AND ACCEPTANCE PHASE:
A. DEVELOP AND COORDINATE EXECUTION OF TESTING PLAN AND COMMISSIONING ACTIVITIES TO VERIFY AND DOCUMENT SYSTEMS ARE FUNCTIONING IN ACCORDANCE WITH DESIGN INTENT AND CONTRACT DOCUMENTS.
B. MAY ASSIST WITH PROBLEM-SOLVING OF DEFICIENCIES, BUT ULTIMATELY THAT RESPONSIBILITY LIES WITH THE CONTRACTORS AND DESIGN ENGINEER OF RECORD.
C. NOT RESPONSIBLE FOR DESIGN CONCEPT, DESIGN CRITERIA, CODE COMPLIANCE, GENERAL CONSTRUCTION SCHEDULING, COST ESTIMATING, OR CONSTRUCTION MANAGEMENT.
D. REVIEW THE OPR, BOD AND DESIGN DOCUMENTS
E. DEVELOP AND MAINTAIN A PROJECT COMMISSIONING PLAN
F. PLAN AND CONDUCT A COMMISSIONING SCOPING MEETING AND OTHER COMMISSIONING MEETINGS.
G. ASSIST THE OWNER AND DESIGN TEAM WITH DEVELOPMENT OF TRAINING REQUIREMENTS FOR COMMISSIONED EQUIPMENT AND SYSTEMS.
H. COORDINATE THE COMMISSIONING WORK AND, WITH THE GC AND PM, ENSURE THAT COMMISSIONING ACTIVITIES ARE BEING SCHEDULED INTO THE MASTER SCHEDULE.
I. REQUEST AND REVIEW ADDITIONAL INFORMATION REQUIRED TO PERFORM COMMISSIONING TASKS, INCLUDING O&M MATERIALS, CONTRACTOR START-UP AND CHECKOUT PROCEDURES.
J. CONCURRENT WITH THE A/E REVIEWS, REVIEW CONTRACTOR SUBMITTALS OF SYSTEMS BEING COMMISSIONED FOR COMPLIANCE WITH COMMISSIONING PROCESS,
K. PERFORM SITE VISITS TO OBSERVE COMPONENT AND SYSTEM INSTALLATIONS.
L. ATTEND CONSTRUCTION JOB-SITE MEETINGS AS SCHEDULED BY THE GC OR REQUESTED BY THE OWNER TO MONITOR CONSTRUCTION AND COMMISSIONING PROGRESS.
M. DEVELOP START-UP AND INITIAL SYSTEMS CHECKOUT PLAN WITH SUBCONTRACTORS.
N. APPROVE SYSTEMS STARTUP BY REVIEWING START-UP REPORTS AND BY SELECTED SITE OBSERVATION.
O. REVIEW TAB EXECUTION PLAN.
P. OVERSEE SUFFICIENT FUNCTIONAL TESTING OF THE CONTROL SYSTEM AND APPROVE IT TO BE USED FOR TAB, BEFORE TAB IS EXECUTED.
Q. WITH NECESSARY ASSISTANCE AND REVIEW FROM INSTALLING CONTRACTORS, WRITE THE FUNCTIONAL PERFORMANCE TEST PROCEDURES FOR EQUIPMENT AND SYSTEMS. SUBMIT TO PM FOR REVIEW, AND FOR APPROVAL IF REQUIRED.
R. COORDINATE, WITNESS, DOCUMENT AND APPROVE FUNCTIONAL PERFORMANCE TESTS PERFORMED BY INSTALLING CONTRACTORS. COORDINATE RETESTING AS NECESSARY.
S. WITH THE GC AND SUBCONTRACTORS, MAINTAIN MASTER DEFICIENCY AND RESOLUTION RECORD AND PROVIDE OWNER WITH WRITTEN PROGRESS REPORTS AND RECOMMENDED ACTIONS. ADDITIONAL COSTS TO OVERSEE, RETEST AND CORRECT DEFICIENCIES SHALL BE PAID BY THE GC.
T. REVIEW THE O&M MANUALS
U. COORDINATE CURRENT FACILITY REQUIREMENTS AND OPERATIONS AND MAINTENANCE PLAN DOCUMENTATION
V. CONFIRM THAT THE OWNER TRAINING PROGRAM HAS BEEN COMPLETED PER THE OWNER'S PROJECT REQUIREMENTS FOR ALL COMMISSIONED EQUIPMENT.
W. COORDINATE SYSTEMS MANUAL DOCUMENTATION DEVELOPMENT
X. PREPARE A FINAL COMMISSIONING REPORT
Y. DEVELOP ONGOING COMMISSIONING PLAN
2. WARRANTY PERIOD: REFER TO SECTION 3.12, BUILDING OPERATIONS REVIEW

D. GENERAL CONTRACTOR (GC) RESPONSIBILITIES:
1. CONSTRUCTION AND ACCEPTANCE PHASE:
A. FACILITATE COORDINATION OF COMMISSIONING WORK BY CXA AND INTEGRATE COMMISSIONING ACTIVITIES INTO THE MASTER SCHEDULE.
B. ATTEND COMMISSIONING SCOPING MEETING AND ADDITIONAL MEETINGS, AS NECESSARY.
C. FURNISH COPIES OF CONSTRUCTION DOCUMENTS, ADDENDA, CHANGE ORDERS, RFI, SUBMITTALS AND SHOP DRAWINGS RELATED TO COMMISSIONED EQUIPMENT AND SYSTEMS TO CXA.
D. ENSURE SUBCONTRACTORS EXECUTE THEIR COMMISSIONING RESPONSIBILITIES PER THE CONTRACT DOCUMENTS, SPECIFICATIONS AND COMMISSIONING PLAN.
E. SUBMIT OWNER TRAINING AGENDA AND PLAN TO CXA PRIOR TO TRAINING AND COORDINATE TRAINING WITH OWNER AND INSTALLING CONTRACTORS.
F. WORK WITH SUBCONTRACTORS TO PREPARE O&M MANUALS, PER SPECIFICATIONS, INCLUDING UPDATING ORIGINAL SEQUENCES OF OPERATION AND PLANS TO RECORD CONDITIONS.
G. WORK WITH DESIGN TEAM AND SUBCONTRACTORS TO PREPARE CURRENT FACILITY REQUIREMENTS AND OPERATIONS AND MAINTENANCE PLAN AND SYSTEMS MANUAL DOCUMENTATION, PER SPECIFICATIONS,
ASSIST IN RESOLUTION OF SYSTEM DEFICIENCIES IDENTIFIED DURING COMMISSIONING. CORRELATE THE RESOLUTION OF ALL DEFICIENCIES WITH FINAL PAYMENT TO ASSOCIATED CONTRACTOR LESS WARRANTY RETENTION.
2. WARRANTY PERIOD: REFER TO SECTION 3.12, BUILDING OPERATIONS REVIEW

E. CONTROLS CONTRACTOR (CC) RESPONSIBILITIES:
1. SEQUENCES OF OPERATION SUBMITTALS: TEMPERATURE CONTROLS SUBMITTALS TO INCLUDE COMPLETE AND DETAILED SEQUENCES OF OPERATION FOR EACH PIECE OF EQUIPMENT.
2. CONTROL DRAWINGS SUBMITTAL SHALL INCLUDE:
A. GRAPHIC SCHEMATIC DEPICTIONS OF SYSTEMS AND INDIVIDUAL COMPONENTS ASSOCIATED WITH THE CONTROL SYSTEM, INCLUDING EQUIPMENT PRIMARILY CONTROLLED BY PACKAGED CONTROLS. ALL CONTROL INTERFACES TO EMBEDDED CONTROLS WITHIN PACKAGED SYSTEMS WILL BE FULLY DETAILED.
B. FULL POINTS LIST INCLUDING FOR EACH POINT: SYSTEM NAME, POINT ABBREVIATION AND DESCRIPTION, POINT TYPE, AND DISPLAY UNIT.
3. RECORD DRAWING VERSION OF CONTROL DRAWINGS AND SEQUENCES OF OPERATION TO BE INCLUDED IN FINAL CONTROLS O&M MANUAL SUBMITTAL.
4. CONTROLS CONTRACTOR TO PREPARE AND SUBMIT TO THE CXA A WRITTEN PLAN THAT WILL BE FOLLOWED TO TEST, CHECKOUT AND ADJUST CONTROL SYSTEM PRIOR TO FUNCTIONAL PERFORMANCE TESTING.
5. SIGNED AND DATED CERTIFICATION TO CXA AND OWNER UPON COMPLETION OF CONTROL SYSTEM CHECKOUT.

F. MECHANICAL, ELECTRICAL, CONTROLS, AND TAB CONTRACTOR (SUBCONTRACTORS) RESPONSIBILITIES:
1. CONSTRUCTION AND ACCEPTANCE PHASES:
A. ATTEND COMMISSIONING KICK-OFF MEETING, ADDITIONAL COMMISSIONING COORDINATION MEETINGS AND DEFICIENCY RESOLUTION MEETINGS, AS NECESSARY.
B. PROVIDE ADDITIONAL REQUESTED DOCUMENTATION, PRIOR TO NORMAL O&M MANUAL SUBMITTALS, TO CXA FOR DEVELOPMENT AND REVIEW OF START-UP AND FUNCTIONAL TESTING PROCEDURES.
C. ASSIST IN CLARIFICATION OF OPERATION AND CONTROL OF COMMISSIONED EQUIPMENT AS NECESSARY FOR WRITING DETAILED TESTING PROCEDURES.
D. DEVELOP START-UP AND CHECKOUT PLAN FOR COMMISSIONED EQUIPMENT BASED ON MANUFACTURER'S RECOMMENDATIONS AND VENDOR'S IN-HOUSE CHECKLISTS. SUBMIT TO CXA FOR REVIEW AND APPROVAL PRIOR TO START-UP.
E. DURING STARTUP AND CHECKOUT PROCESS, EXECUTE PFAT FOR COMMISSIONED EQUIPMENT. PERFORM AND DOCUMENT COMPLETED STARTUP AND SYSTEM OPERATIONAL CHECKOUT PROCEDURES. BE PRESENT ON THE JOB SITE TO REVIEW PFAT RESULTS WITH THE CXA AS REQUESTED.
F. RESOLVE A/E PUNCH LIST ITEMS BEFORE IMPLEMENTATION OF FAT.
G. AIR AND WATER TAB TO BE COMPLETED WITH DISCREPANCIES AND PROBLEMS RESOLVED BEFORE FAT.
H. PERFORM FAT, UNDER DIRECTION OF CXA, FOR COMMISSIONED EQUIPMENT.
I. RESOLVE EQUIPMENT OR SYSTEM DEFICIENCIES BY MAKING HARDWARE OR SOFTWARE CHANGES NECESSARY TO SATISFY PROJECT PLANS AND SPECIFICATIONS AND RETEST AS REQUIRED.
J. PREPARE O&M MANUALS PER SPECIFICATIONS, INCLUDING UPDATING ORIGINAL SEQUENCES OF OPERATION AND PLANS TO RECORD CONDITIONS.
K. PROVIDE TRAINING OF OWNER'S OPERATING PERSONNEL FOR ALL INSTALLED EQUIPMENT AND/OR EQUIPMENT THE OWNER REQUESTS TRAINING FOR.
L. COORDINATE WITH EQUIPMENT MANUFACTURERS TO DETERMINE REQUIREMENTS TO MAINTAIN VALIDITY OF WARRANTIES.
M. PROVIDE ALL NECESSARY HANDHELD INSTRUMENTS TO PERFORM STARTUP, CHECKOUT, PFATS, FATS AND DEFICIENCY RESOLUTION.
N. TAB TO PROVIDE TEST AND BALANCE PLAN TO CXA FOR REVIEW BEFORE BALANCING BEGINS.
O. TAB TO MAINTAIN A DEFICIENCY LOG (INCLUDING AIR, WATER & CONTROLS ISSUES) PROVIDED TO THE CXA ON A WEEKLY BASIS.
P. TAB TO SUBMIT FINAL TEST AND BALANCE DATA TO CXA FOR REVIEW.
Q. EACH CONTRACTOR SHALL PROVIDE A WRITTEN DETAILED DESCRIPTION OF ALL MAJOR COMPONENTS THEY PROVIDE OR INSTALL THAT ARE PART OF THE COMMISSIONED SYSTEMS. THE MC SHALL PROVIDE A DESCRIPTION OF ALL HYDRONIC AND AIR SYSTEMS THAT ARE INSTALLED, WHILE THE EC SHALL PROVIDE A DESCRIPTION OF ANY LIGHTING CONTROL SYSTEMS. THE CC IS REQUIRED TO SUBMIT A NARRATIVE DESCRIPTION OF THE HVAC CONTROL SYSTEM. ALL WRITTEN SYSTEM DESCRIPTIONS SHALL BE SUBMITTED ELECTRONICALLY IN MICROSOFT WORD OR PDF FORMAT TO THE CXA ACCOMPANYING PFAT SUBMISSIONS TO THE CXA.
R. SINGLE LINE DIAGRAMS OF EACH COMMISSIONED SYSTEM SHALL BE PROVIDED BY MECHANICAL CONTRACTOR OR SUBCONTRACTORS AND SUBMITTED TO CXA FOR REVIEW. DIAGRAMS SHALL BE UNTANGLED TO REFLECT THE SIMPLEST DISPLAY OF DUCTING, PIPING LINES OR CIRCUITRY POSSIBLE. EQUIPMENT CAPACITIES AND FLOW RATES SHALL BE DISPLAYED ON DIAGRAM ADJACENT TO ASSOCIATED EQUIPMENT.
2. WARRANTY PERIOD: REFER TO SECTION 3.12, BUILDING OPERATIONS REVIEW

G. OWNER'S TECHNICAL STAFF (OS) RESPONSIBILITIES:
1. DESIGN, CONSTRUCTION AND ACCEPTANCE PHASE:
A. PROVIDE OWNER'S PROJECT REQUIREMENTS (OPR)
B. ARRANGE FOR REQUIRED FACILITY OPERATING AND MAINTENANCE PERSONNEL TO PARTICIPATE IN COMMISSIONING ACTIVITIES AND TRAINING SESSIONS.
C. PROVIDE FINAL ACCEPTANCE OF BUILDING CONTINGENT UPON THE RESOLUTION OF ALL DEFICIENCIES IDENTIFIED DURING THE COMMISSIONING PROCESS.
2. WARRANTY PERIOD: REFER TO SECTION 3.12, BUILDING OPERATIONS REVIEW

H. MANUFACTURER'S REPRESENTATIVES AND EQUIPMENT SUPPLIERS RESPONSIBILITIES:
1. PROVIDE REQUESTED SUBMITTAL DATA, INCLUDING DETAILED START-UP PROCEDURES AND SPECIFIC RESPONSIBILITIES OF OWNER TO KEEP WARRANTIES IN EFFECT.
2. PROVIDE INFORMATION REQUESTED BY CXA REGARDING EQUIPMENT SEQUENCE OF OPERATION AND TESTING PROCEDURES.
3. ASSIST IN EQUIPMENT TESTING AND TRAINING PER AGREEMENTS WITH CONTRACTORS.

PART 2 PRODUCTS

2.1 TEST EQUIPMENT

A. GC AND SUBCONTRACTORS, INCLUDING THE TAB CONTRACTOR, TO PROVIDE ALL STANDARD TESTING EQUIPMENT REQUIRED TO PERFORM STARTUP AND INITIAL CHECKOUT AND REQUIRED PFAT AND FAT FOR EQUIPMENT BEING TESTED. ANY SPECIALIZED TESTING EQUIPMENT WILL BE PROVIDED BY THE INSTALLING CONTRACTOR.

B. ALL TESTING EQUIPMENT SHALL BE OF SUFFICIENT QUALITY AND ACCURACY TO TEST AND/OR MEASURE SYSTEM PERFORMANCE WITH THE TOLERANCES SPECIFIED IN THE *SPECIFICATIONS*. ALL EQUIPMENT SHALL BE CALIBRATED PER THE MANUFACTURER'S RECOMMENDED INTERVALS AND WHEN DROPPED OR DAMAGED. CALIBRATION TAGS SHALL BE AFFIXED OR CERTIFICATES READILY AVAILABLE.

C. FIELD-INSTALLED SENSORS AND GAGES SHALL BE CALIBRATED USING THE METHODS DESCRIBED BELOW. CALIBRATION PROCEDURES ARE DOCUMENTED DURING EXECUTION OF THE START-UP PLAN ON THE PREFUNCTIONAL CHECKLISTS. SENSORS INSTALLED IN PACKAGED UNITS AT THE FACTORY WITH CALIBRATION CERTIFICATION PROVIDED NEED NOT BE FIELD CALIBRATED. ALTERNATE METHODS MAY BE USED, IF APPROVED BY THE OWNER AND CXA.

D. CC OR SUBCONTRACTORS TO VERIFY CALIBRATION OF SENSORS AS FOLLOWS: PUT THE EQUIPMENT IN OPERATION. MAKE A READING WITH A CALIBRATED TEST INSTRUMENT WITHIN SIX INCHES OF THE SITE SENSOR. VERIFY THAT THE SENSOR READING IS WITHIN THE TOLERANCE LISTED IN THE PROJECT SPECIFICATIONS FOR THE ASSOCIATED SENSOR. IF NOT, CALIBRATE OR REPLACE SENSOR.

PART 3 EXECUTION

3.1 MEETINGS

A. KICK-OFF MEETING: MEMBERS OF DESIGN AND CONSTRUCTION TEAM INVOLVED IN THE COMMISSIONING PROCESS MEET AND DISCUSS SCOPE OF WORK, TASKS, SCHEDULES, DELIVERABLES, AND RESPONSIBILITIES FOR IMPLEMENTATION OF COMMISSIONING PLAN. ADDITIONAL SCHEDULED MEETINGS WILL BE REQUIRED THROUGHOUT CONSTRUCTION TO PLAN, SCOPE, COORDINATE AND SCHEDULE FUTURE ACTIVITIES AND RESOLVE ISSUES.

B. OTHER MEETINGS TO BE PLANNED AND CONDUCTED BY CXA AS CONSTRUCTION PROGRESSES:
1. MEETINGS TO COVER COORDINATION AND DEFICIENCY RESOLUTION (INCLUDING TAB WEEKLY DEFICIENCY LOGS) AS REQUIRED.
2. COST OF DEFICIENCY RESOLUTION MEETINGS MAY BE BORNE BY THE CONTRACTORS AS JUDGED BY THE CXA.

3.2 COMMISSIONING PLAN:

A. THE COMMISSIONING PLAN IS DEVELOPED BY THE CXA TO PROVIDE GUIDANCE TO THE TEAM IN EXECUTION OF THE COMMISSIONING PROCESS.
1. COMMISSIONING PLAN SHALL INCLUDE THE FOLLOWING:
A. GOALS AND OBJECTIVES
B. GENERAL PROJECT INFORMATION
C. SYSTEMS TO BE COMMISSIONED
D. TEAM MEMBERS AND ROLES
E. COMMUNICATION PROTOCOL, MEETINGS AND MANAGEMENT OF THE PROCESS
F. SUMMARY FOR THE COMMISSIONING ACTIVITIES

3.3 SUBMITTALS AND SUBMITTAL REVIEW PROCEDURES

A. CONTRACTORS TO PROVIDE ONE COPY OF SUBMITTALS TO CXA CONGRUENT TO A/E TEAM SUBMITTAL REVIEW. CXA MAY REQUEST THAT ALL SUBMITTALS FOR COMMISSIONED SYSTEMS TAKE THE FORM OF ELECTRONIC FILES IN PDF FORMAT. SUBMITTED FILES SHALL ONLY CONTAIN DESIGN, INSTALLATION, OPERATION AND MAINTENANCE MANUALS PERTINENT TO THE SPECIFIC EQUIPMENT BEING PROVIDED.

B. CXA REVIEWS SUBMITTALS RELATED TO COMMISSIONED EQUIPMENT FOR CONFORMANCE TO CONSTRUCTION DOCUMENTS AS IT RELATES TO COMMISSIONING PROCESS.

C. AFTER THE SUBMITTAL IS APPROVED BY THE DESIGNER THE CXA WILL REQUEST ADDITIONAL INFORMATION FROM DESIGN TEAM, CONTRACTORS AND SUBCONTRACTORS SUCH AS O & M AND INSTALLATION LITERATURE OR OTHER TECHNICAL DATA TO FACILITATE THE COMMISSIONING PROCESS.

D. CXA MAY REQUEST ADDITIONAL DESIGN AND OPERATIONS NARRATIVE FROM SUBCONTRACTORS AND A/E.

E. A DRAFT O&M MANUAL SUBMITTAL WILL BE REQUIRED A MONTH PRIOR TO SITE COMMISSIONING AND SCHEDULED TRAINING.

3.4 START-UP, PREFUNCTIONAL INSPECTION CHECKLISTS

A. PREFUNCTIONAL CHECKLISTS ARE IMPORTANT TO ENSURE THAT THE EQUIPMENT AND SYSTEMS ARE PROPERLY INSTALLED AND OPERATIONAL AND TO ENSURE THAT FUNCTIONAL PERFORMANCE TESTING MAY PROCEED WITHOUT UNNECESSARY DELAYS. EACH PIECE OF EQUIPMENT RECEIVES FULL PREFUNCTIONAL CHECKOUT BY THE RESPONSIBLE CONTRACTOR. THE PREFUNCTIONAL TESTING FOR A GIVEN SYSTEM MUST BE SUCCESSFULLY COMPLETED PRIOR TO FORMAL FUNCTIONAL PERFORMANCE TESTING OF EQUIPMENT OR SUBSYSTEMS OF THE GIVEN SYSTEM.

B. START-UP AND INITIAL CHECKOUT PLAN: THE CXA SHALL ASSIST THE CONTRACTOR IN DEVELOPING PRE-FUNCTIONAL CHECKLISTS AND A DETAILED START-UP PLAN FOR ALL COMMISSIONED EQUIPMENT SO THAT THERE IS WRITTEN DOCUMENTATION THAT THE MANUFACTURER-RECOMMENDED PROCEDURES HAVE BEEN COMPLETED.
1. THE SUBCONTRACTOR RESPONSIBLE FOR THE PURCHASE OF THE EQUIPMENT DEVELOPS THE FULL START-UP PLAN OR PREFUNCTIONAL ASSURANCE TESTS (PFAT). THE PLAN WILL INCLUDE CHECKLISTS AND PROCEDURES WITH SPECIFIC BOXES OR LINES FOR RECORDING AND DOCUMENTING THE CHECKING AND INSPECTIONS OF EACH PROCEDURE AND A SUMMARY STATEMENT WITH A SIGNATURE BLOCK AT THE END OF THE PLAN.
2. THE SUBCONTRACTOR SUBMITS THE FULL STARTUP PLAN TO THE CXA FOR REVIEW AND APPROVAL FOUR WEEKS PRIOR TO FIELD USE.
3. THE CXA REVIEWS AND APPROVES THE PROCEDURES AND THE FORMAT FOR DOCUMENTING THEM, NOTING ANY PROCEDURES THAT NEED TO BE ADDED.
4. THE FULL START-UP PROCEDURES AND THE APPROVAL FORM MAY BE PROVIDED TO THE PM FOR REVIEW AND APPROVAL, DEPENDING ON MANAGEMENT PROTOCOL.
5. WHERE SPECIFIED, START-UP IS ONLY TO BE PERFORMED BY CERTIFIED MANUFACTURER'S REPRESENTATIVES.

Architect:

ARCHITECT OF RECORD:
BRR ARCHITECTURE, INC
8131 METCALF AVE
SUITE 300
OVERLAND PARK, KS 66204

www.brrarch.com

TEL: 913-262-9095
FAX: 913-262-9044

COPYRIGHT NOTICE

This drawing was prepared for use on a specific site contemporaneously with its issue date and it is not suitable for use on a different project site or at a later time. Use of this drawing for reference or example on another project requires the services of properly licensed architects and engineers. Reproduction of this drawing for reuse on another project is not authorized and may be contrary to the law.

Engineer:

Project Owner:

NIKE, Inc.
One Bowerman Drive
Beaverton, OR 97005
(503) 671-6453
www.nike.com

Project Address:

NIKE FACTORY STORE
WATERFORD LAKES
SHOPPING CENTER
449 N. ALAFAYA TRAIL
ORLANDO, FL 32828
TEMPLATE ISSUE DATE: 11/28/2018

Fixture Package:

UNITE

Stamp:

NOT FOR CONSTRUCTION

Issued For:

PERMIT/BID

Issue Date:

11/06/2020

Revisions:

NO.	REASON	DATE

PROJECT MANAGER:
KH

CHECKED BY:

DRAWN BY:
RAN

Project Number:

62301411

Sheet Title:

ARCHITECTURAL SPECIFICATIONS

Sheet Number:

AS3.0

C. CONTRACTORS SCHEDULE PFAT ACTIVITIES AND INFORM CXA OF THIS SCHEDULE TO ENABLE THE CXA TO ATTEND IF DESIRED. CONTRACTOR COMPLETES ALL PFAT IN THEIR ENTIRETY AND SUBMITS COMPLETED PFAT TO THE CXA FOR REVIEW.

D. PFAT SHALL VERIFY ALL ASPECTS OF EQUIPMENT INCLUDING BUT NOT LIMITED TO EQUIPMENT MANUFACTURER, MODEL, CAPACITY, EFFICIENCY, ACCURACY, STATUS, FULL MODULATION CAPABILITY, TYPE, RATINGS, ACCESSORIES, COMPATIBILITY, INSTALLATION METHODS AND ALL OTHER PROJECT SPECIFICATION REQUIREMENTS.

E. TAB TO SUBMIT TEST AND BALANCE PLAN AND DEFICIENCY LOG FORM TO CXA FOR REVIEW AND COMMENT 3 WEEKS BEFORE BALANCING IS TO BEGIN. INCORPORATE CXA COMMENTS INTO FINAL TEST AND BALANCE PLAN. COMPLETED FINAL TEST AND BALANCE PLANS AND DATA SHALL INCLUDE SUFFICIENT DESCRIPTIONS OF HOW THE RESULTS WERE ACHIEVED INCLUDING A FULL DESCRIPTION OF THE SYSTEM CONDITIONS AT THE TIME MEASUREMENTS WERE TAKEN AND WHERE WITHIN THE SYSTEM THE MEASUREMENT WERE TAKEN. TAB FINAL TEST AND BALANCE RESULTS WILL IDENTIFY THE LOWEST POSSIBLE AIR OR WATER PRESSURE NECESSARY TO SATISFY SYSTEM DESIGN FLOW RATES OR SYSTEM HEATING OR COOLING CAPACITY REQUIREMENTS.

F. TAB TO PROVIDE LABOR AND HANDHELD INSTRUMENTS NECESSARY TO CALIBRATE ALL PROJECT AIR AND HYDRONIC FLOW SENSORS AND PRESSURE SENSORS. CC TO BE PRESENT AS NECESSARY TO MANIPULATE CONTROL SYSTEM AND RECORD RESULTS OF CALIBRATION PROCESS AND ENTER RESULTS INTO CONTROL SYSTEM SOFTWARE OR EQUIPMENT SOFTWARE.

G. CC TO SUBMIT CONTROL SYSTEM CHECKOUT PLAN TO CXA FOR REVIEW AND COMMENT 3 WEEKS BEFORE CONTROL SYSTEM CHECKOUT IS TO COMMENCE. CONTROL SYSTEM CHECKOUT PLAN IS TO VERIFY ALL INSTALLATION OF END DEVICE, WIRING BETWEEN DEVICE AND CONTROLLER AND CONTROLLER SOFTWARE IS CONFIGURED CORRECTLY SUCH THAT A CHANGE IN THE END DEVICE CONDITION IS CORRECTLY REFLECTED IN THE SOFTWARE. CALIBRATION OF ALL ANALOG INPUTS SHALL BE A PART OF CONTROL SYSTEM CHECKOUT. VERIFICATION OF ALL END DEVICE FULL RANGE OF MOTION ASSOCIATED WITH ANALOG OUTPUTS SHALL BE A PART OF CONTROL SYSTEM CHECKOUT. VERIFICATION OF END DEVICE CORRECT ON/OFF STATUS ASSOCIATED WITH APPROPRIATE DIGITAL OUTPUT COMMAND SIGNAL STATUS SHALL BE A PART OF CONTROL SYSTEM CHECKOUT. INCORPORATE CXA COMMENTS INTO FINAL CONTROL SYSTEM CHECKOUT DOCUMENTATION. PROVIDE ALL CONTROL SYSTEM DOCUMENTATION TO CXA UPON COMPLETION FOR REVIEW AND COMMENT. CONTROL SYSTEM CHECKOUT IS A COMPONENT OF PFAT AND ALL SPECIFICATION REQUIREMENTS OF PFAT SHALL APPLY.

H. LIGHTING ELECTRICAL CONTRACTOR SHALL CREATE AND SUBMIT PFAT FOR ALL LIGHTING CONTROL SYSTEMS OR LIGHTING CONTROL COMPONENTS INCLUDING BUT NOT LIMITED TO MOTION SENSOR CONTROLS, PHOTOCELL CONTROLS, TIME CLOCK OR ASTRONOMICAL CLOCK CONTROLS OR SWEEP FUNCTION CONTROLS. AT MINIMUM, PHOTOCELL OPTIMAL PLACEMENT AND SENSITIVITY ADJUSTED SHALL BE VERIFIED. FOR MOTION SENSORS: PLACEMENT, ANGLE, DELAY TIMES, LENS ADJUSTMENT AND SENSITIVITY ADJUSTMENTS SHALL BE MADE TO CONFIRM 100% COVERAGE IN THE SPACE. SENSITIVITY ADJUSTMENTS SHALL BE MADE SUCH THAT AIR-MOVEMENT DOES NOT RESULT IN THE LIGHTS BEING TRIPPED ON.

I. COMPLETION OF PREFUNCTIONAL CHECKLISTS AND STARTUP:
   1. FOUR WEEKS PRIOR TO STARTUP, THE SUBCONTRACTORS AND VENDORS SCHEDULE STARTUP AND CHECKOUT WITH THE PM, GC AND CXA. THE PERFORMANCE OF THE PREFUNCTIONAL CHECKLISTS, STARTUP AND CHECKOUT ARE DIRECTED AND EXECUTED BY THE SUB OR VENDOR. WHEN CHECKING OFF PREFUNCTIONAL CHECKLISTS, SIGNATURES MAY BE REQUIRED OF OTHER SUBCONTRACTORS FOR VERIFICATION OF COMPLETION OF THEIR WORK.
   2. SUBCONTRACTORS AND VENDORS EXECUTE STARTUP AND CHECKOUT AND PROVIDE CXA WITH SIGNED AND DATED COPY OF COMPLETED START-UP AND PFAT. THE CXA WILL WITNESS SOME, BUT NOT ALL EQUIPMENT START-UP.
   3. ONLY INDIVIDUALS THAT HAVE DIRECT KNOWLEDGE AND WITNESSED THAT A LINE ITEM TASK ON THE PREFUNCTIONAL CHECKLIST WAS PERFORMED SHALL INITIAL OR CHECK THAT ITEM. IT IS NOT ACCEPTABLE FOR WITNESSING SUPERVISORS TO FILL OUT THESE FORMS.

J. DEFICIENCIES, NON-CONFORMANCE AND APPROVAL IN CHECKLISTS AND STARTUP.
   1. AT THE REQUEST OF THE CXA, THE CONTRACTOR WILL BE AVAILABLE ON THE JOBSITE AND WITH THE SAME PORTABLE MEASUREMENT INSTRUMENT USED DURING BALANCING, START-UP AND CHECKOUT OR WHILE COMPLETING PFAT, TO PERFORM SAMPLE MEASUREMENTS OR MAKE SYSTEM ADJUSTMENTS TO CONFIRM THE RESULTS OF ANY DOCUMENTATION SUBMITTED TO THE CXA. THE QUANTITY OF SAMPLE MEASUREMENTS TAKEN SHALL BE DETERMINED BY THE CXA BUT WILL NOT CONSTITUTE OVER 20% OF THE TOTAL MEASUREMENTS MADE BY THE CONTRACTOR. SHOULD THE MEASUREMENTS OR RESULTS NOT AGREE WITH THOSE TAKEN PREVIOUSLY BY THE CONTRACTOR, THE CXA WILL RESERVE THE RIGHT TO REJECT ALL PREVIOUSLY SUBMITTED TESTS OR CHECKLISTS FORCING THE CONTRACTOR TO REPEAT THE ASSOCIATED TEST OR CHECKLIST.
      A. PROCEDURES RESOLVING ANY OUTSTANDING DEFICIENCIES ARE PROVIDED TO CXA WITHIN TWO DAYS OF TEST COMPLETION.
      B. SCHEDULING THE PFAT, TAB, START-UP AND CHECKOUTS WILL BE CONDUCTED BY THE GC WITH THE APPROPRIATE SUB AND CXA. EFFORTS WILL BE MADE BY THE CXA TO BE ON-SITE WITNESSING CONTRACTOR REQUIRED MEASUREMENTS AND ACTIVITIES LISTED ABOVE. WHEN THE CXA IS ON-SITE WITNESSING THE ACTIVITIES AND MEASURMENTS DETAILED ABOVE THIS WILL BE INCLUDED IN THE 20% SAMPLE.
   2. CXA REVIEWS PFAT, TAB AND START-UP REPORTS AND REPORTS TO OWNER.

3.5 FUNCTIONAL ASSURANCE TESTING

A. OBJECTIVES AND SCOPE:
   1. DEMONSTRATE EACH SYSTEM IS OPERATING PER DOCUMENTED DESIGN INTENT, CONSTRUCTION DOCUMENTS, AND/OR BIDDER DESIGN PACKAGE.
   2. FAT VERIFIES COMPONENTS, EQUIPMENT, SYSTEMS, AND INTERFACES BETWEEN SYSTEMS OPERATE CORRECTLY AND INCLUDE OPERATING MODES, INTERLOCKS, CONTROL SEQUENCES, AND RESPONSES TO EMERGENCY/LIFE SAFETY CONDITIONS.
   3. FUNCTIONAL TESTING FACILITATES BRINGING THE SYSTEMS FROM A STATE OF SUBSTANTIAL COMPLETION TO FULL DYNAMIC OPERATION. ADDITIONALLY, DURING THE TESTING PROCESS, AREAS OF DEFICIENT PERFORMANCE ARE IDENTIFIED AND CORRECTED, IMPROVING THE OPERATION AND FUNCTIONING OF THE SYSTEMS.
   4. VERIFICATION PROCEDURES ARE REVIEWED, WITNESSED, AND DOCUMENTED BY CXA.

B. FUNCTIONAL TESTING WILL NOT BE SCHEDULED UNTIL ALL CONTROL SYSTEM START-UP AND CHECKOUT PLANS, ALL TESTING AND BALANCING REPORTS AND ALL PFAT HAVE BEEN COMPLETED, AND SUBMITTED TO THE CXA FOR REVIEW AND APPROVAL. FUNCTIONAL TESTING MAY COVER COMPLETE COMPONENT AND SYSTEM INSTALLATION, SETUP AND PROGRAMMING OF EQUIPMENT, ALL FACETS OF THE CONTROL SYSTEM AND EFFICIENCY AND CAPACITY OF COMPONENTS AND SYSTEMS.

C. DEVELOPMENT OF TEST PROCEDURES:
   1. CXA CREATES TEST PROCEDURES AND FORMS BASED ON PROJECT PLANS AND SPECIFICATIONS, CONTRACTOR APPROVED SUBMITTALS AND CONTRACTOR SUBMITTED INSTALLATION, OPERATION AND MAINTENANCE MANUALS. IO&M MANUALS WILL BE REQUIRED TO BE SUBMITTED TO THE CXA DURING PFAT DEVELOPMENT.
   2. CXA SUBMITS TEST PROCEDURES TO ASSOCIATED CONTRACTORS AND EQUIPMENT MANUFACTURER WHO ARE RESPONSIBLE TO REVIEW THE TESTS FOR FEASIBILITY, SAFETY, EQUIPMENT AND WARRANTY PROTECTION PRIOR TO EXECUTION. IF DAMAGE TO EQUIPMENT OR SYSTEM RESULTS FROM THE IMPLEMENTATION OF A FUNCTIONAL PERFORMANCE TEST THAT WAS SENT TO THE CONTRACTORS FOR REVIEW, IT IS THE CONTRACTORS RESPONSIBILITY TO PROVIDE ALL EQUIPMENT AND LABOR NECESSARY TO MAKE REPAIRS.
   3. CXA MAY SUBMIT TESTS TO OWNER OR A/E TEAM FOR REVIEW.
   4. TEST PROCEDURE FORMS, DEVELOPED BY THE CXA, TO INCLUDE THE FOLLOWING INFORMATION:
      A. SYSTEM AND EQUIPMENT OR COMPONENT NAME(S).
      B. EQUIPMENT LOCATION AND ID NUMBER.
      C. DATE.
      D. PARTICIPATING PARTIES.
      E. INSTRUCTIONS FOR SETTING UP TEST, INCLUDING SPECIAL CAUTIONS AND LIMITS.
      F. SPECIFIC PROCEDURES TO EXECUTE TEST.
      G. ACCEPTANCE CRITERIA OF PROPER PERFORMANCE WITH DATE PASSED AND INITIALS BOXES.
      H. SECTION FOR COMMENTS OR NOTES.

D. EXECUTION OF FUNCTIONAL ASSURANCE TESTS:
   1. TEST METHODS: FUNCTIONAL PERFORMANCE TESTING AND VERIFICATION MAY BE ACHIEVED BY DIRECT MANIPULATION OF SYSTEM INPUTS SUCH AS TEMPERATURE SENSORS, SETPOINTS, OR SHORT-TERM MONITORING OF PARAMETERS USING STAND ALONE DATA LOGGERS.
      A. A COMBINATION OF METHODS MAY BE REQUIRED TO TEST COMPLETE SEQUENCE OF OPERATIONS.
      B. CXA CREATES TESTS AND DECIDES WHICH METHOD, OR COMBINATION, IS MOST APPROPRIATE.
   2. SETUP: EACH TEST PROCEDURE IS PERFORMED UNDER CONDITIONS THAT SIMULATE NORMAL BUILDING OPERATING CONDITIONS AS CLOSELY AS POSSIBLE.
      A. CONTRACTOR EXECUTING TEST PROVIDES NECESSARY SYSTEM MODIFICATIONS TO PRODUCE SPECIFIED CONDITIONS SUCH AS FLOWS, PRESSURES AND TEMPERATURES AS NECESSARY TO EXECUTE TEST.
      B. AT COMPLETION OF TEST, SUB RETURNS AFFECTED BUILDING EQUIPMENT AND SYSTEMS TO THEIR PRE-TEST CONDITIONS.
   3. CXA WILL PROVIDE THE CONTRACTOR FATS FOR DRY RUN TESTING BY THE CONTRACTOR. THE CONTRACTOR WILL EXECUTE ALL FUNCTIONAL TESTS IN ADVANCE OF FORMAL FUNCTIONAL TESTING WITH THE CXA, OWNER AND CONSTRUCTION TEAM. IN ADDITION, THE CONTRACTOR WILL REVIEW THEIR ASSOCIATED APPROVED SUBMITTAL TO ENSURE THAT THE INSTALLED SYSTEM MEETS THE REQUIREMENTS OF THE APPROVED SUBMITTAL PRIOR TO FUNCTIONAL TESTING.

E. COORDINATION AND SCHEDULING: CONTRACTOR PROVIDES SUFFICIENT NOTICE TO CXA REGARDING COMPLETION SCHEDULE FOR PRE-FUNCTIONAL CHECKLISTS AND STARTUP OF EQUIPMENT AND SYSTEMS.
   1. CXA SCHEDULES FUNCTIONAL TESTS THROUGH OWNER, CONTRACTOR AND APPROPRIATE SUBCONTRACTORS AND THE FOLLOWING SEQUENTIAL PRIORITIES FOLLOWED:
      A. EQUIPMENT IS NOT ‘TEMPORARILY” STARTED (FOR HEATING OR COOLING), UNTIL PRE-START CHECKLIST ITEMS AND MANUFACTURER’S PRE-START PROCEDURES ARE COMPLETED AND MOISTURE, DUST AND OTHER ENVIRONMENTAL AND BUILDING INTEGRITY ISSUES HAVE BEEN ADDRESSED.
      B. FUNCTIONAL PERFORMANCE TESTING ONLY BEGINS AFTER PRE-FUNCTIONAL, START-UP AND TAB IS COMPLETED FOR GIVEN SYSTEM.
      C. CONTRACTOR AND SUBCONTRACTORS ARE RESPONSIBLE TO ASSURE THAT THE FUNCTIONAL TEST PLAN AND ITS EXECUTION IS COORDINATED WITH THE EQUIPMENT MANUFACTURER AND WILL NOT NEGATIVELY AFFECT THE EQUIPMENT OR ASSOCIATED WARRANTY.
      D. CONTROLS SYSTEM AND EQUIPMENT IT CONTROLS ARE NOT FUNCTIONALLY TESTED UNTIL POINTS HAVE BEEN CALIBRATED AND PRE-FUNCTIONAL CHECKLISTS ARE COMPLETED.
      E. LIGHTING CONTROL SYSTEM OR LIGHTING CONTROL COMPONENT PFATS MUST BE COMPLETE BEFORE FAT IS SCHEDULED FOR LIGHTING CONTROLS.

F. PROBLEM SOLVING:
   1. THE CXA MAY RECOMMEND SOLUTIONS TO PROBLEMS OR DEFICIENCIES FOUND, HOWEVER THE BURDEN OF RESPONSIBILITY TO SOLVE, CORRECT AND RETEST PROBLEMS IS WITH THE GC, SUBCONTRACTORS AND A/E.

3.6 DOCUMENTATION, NON-CONFORMANCE AND APPROVAL OF TESTS

A. DOCUMENTATION:
   1. CXA WITNESSES AND DOCUMENTS THE RESULTS OF FUNCTIONAL PERFORMANCE TESTS.

B. NON-CONFORMANCE:
   1. CXA RECORDS RESULTS OF FUNCTIONAL TEST ON PROCEDURE OR TEST FORM.
      A. DEFICIENCIES IDENTIFIED DURING VERIFICATION TESTING ARE DOCUMENTED ON AN OBSERVATION OR ISSUES LOG AND REPORTED TO OWNER, CONTRACTORS AND SUBCONTRACTORS.
      B. DEFICIENCY REPORT / OBSERVATION LOG INCLUDE DETAILS OF COMPONENTS OR SYSTEMS FOUND TO BE NON-COMPLIANT WITH PARAMETERS OF TEST PLANS OR PROJECT DOCUMENTS.
      C. OBSERVATION LOG DETAILS REQUIREMENT ITEM IN NEED OF CORRECTION AND ATTEMPTS TO IDENTIFY RESPONSIBLE PARTY.
   2. CORRECTIONS OF MINOR DEFICIENCIES IDENTIFIED MAY BE MADE DURING TESTS AT DISCRETION OF CXA AND WITH RESOLUTION DOCUMENTED ON PROCEDURE FORM.
   3. IDENTIFIED DEFICIENCY RESOLUTION:
      A. NO DISPUTE ON DEFICIENCY AND RESPONSIBILITY TO CORRECT IT:
         1) CXA DOCUMENTS DEFICIENCY AND ADJUSTMENTS OR ALTERATIONS REQUIRED TO CORRECT IT.
         2) SUB CORRECTS DEFICIENCY AND NOTIFIES CXA THAT EQUIPMENT IS READY TO BE RETESTED.
         3) CXA RESCHEDULES TEST AND TEST IS REPEATED.
      B. DISPUTE ABOUT DEFICIENCY OR RESPONSIBILITY:
         1) DEFICIENCY IS DOCUMENTED ON NON-COMPLIANCE FORM AND COPY GIVEN TO OWNER AND CONTRACTOR.
         2) RESOLUTIONS ARE MADE AT THE LOWEST MANAGEMENT LEVEL POSSIBLE. OTHER PARTIES ARE BROUGHT INTO THE DISCUSSIONS AS NEEDED. FINAL INTERPRETIVE AUTHORITY IS WITH THE A/E. FINAL ACCEPTANCE AUTHORITY IS WITH THE PROJECT MANAGER.
         3) CXA DOCUMENTS RESOLUTION PROCESS.
         4) ONCE INTERPRETATION AND RESOLUTION HAVE BEEN DECIDED, APPROPRIATE PARTY CORRECTS DEFICIENCY, DOCUMENTS REQUIRED ACTION ON THE ISSUES LOG AND NOTIFIES CXA THAT EQUIPMENT IS READY TO BE RETESTED. THE CXA RESCHEDULES THE TEST AND THE TEST IS REPEATED UNTIL SATISFACTORY PERFORMANCE IS ACHIEVED.
   4. COSTS OF RETESTING:
      A. THE COST TO RETEST A PREFUNCTIONAL OR FUNCTIONAL TEST BEYOND 10% OF THE TOTAL NUMBER OF TESTS WILL BE BACK-CHARGED TO THE RESPONSIBLE SUB.
      B. FOR A DEFICIENCY IDENTIFIED, NOT RELATED TO ANY PREFUNCTIONAL CHECKLIST OR START-UP FAULT, THE FOLLOWING SHALL APPLY: THE CXA AND PM WILL DIRECT THE RETESTING OF THE EQUIPMENT ONCE AT NO “CHARGE” TO THE GC FOR THEIR TIME. HOWEVER, THE CXA’S TIME FOR A SECOND RETEST WILL BE CHARGED TO THE GC, WHO MAY CHOOSE TO RECOVER COSTS FROM THE RESPONSIBLE SUB.
      C. THE TIME FOR THE CXA TO EXECUTE ANY RE-TESTING REQUIRED BECAUSE A SPECIFIC PREFUNCTIONAL CHECKLIST OR START-UP TEST ITEM, REPORTED TO HAVE BEEN SUCCESSFULLY COMPLETED, BUT DETERMINED DURING FUNCTIONAL TESTING TO BE FAULTY, WILL BE BACK-CHARGED TO THE GC, WHO MAY CHOOSE TO RECOVER COSTS FROM THE PARTY RESPONSIBLE FOR EXECUTING THE FAULTY PREFUNCTIONAL TEST.

C. APPROVAL:
   1. CXA MAKES FORMAL APPROVAL OF FUNCTIONAL PERFORMANCE TEST AFTER REVIEW.
   2. CXA RECOMMENDS ACCEPTANCE OF EACH TEST TO OWNER OR OWNER’S PROJECT MANAGER.
   3. OWNER GIVES FINAL APPROVAL ON EACH TEST.
   4. CXA AND OWNERS FINAL APPROVAL OF ALL TESTS AND RESOLUTION OF ALL DEFICIENCIES IS NECESSARY BEFORE THE OWNER WILL ACCEPT THE BUILDING AND TURNOVER OF THE BUILDING TO THE OWNER CAN TAKE PLACE. FINAL PAYMENT TO GC AND ALL CONTRACTORS MAY BE WITHHELD BY THE OWNER SUBJECT TO THE PREREQUISITE OF FINAL ACCEPTANCE OF THE BUILDING BY THE OWNER.

3.7 SYSTEMS MANUAL

A. THE PROJECT SYSTEMS MANUAL INCLUDES THE INFORMATION NECESSARY TO OPERATE, MAINTAIN AND RECOMMISSION ALL ENERGY-CONSUMING COMMISSIONED SYSTEMS WITHIN THE BUILDING. INFORMATION FOR THE SYSTEMS MANUAL IS GENERALLY COLLECTED DURING CONSTRUCTION AND AT SUBSTANTIAL COMPLETION OF THE PROJECT.

B. THE BASIC SCOPE AND FORMAT OF A SYSTEMS MANUAL ARE OUTLINED IN ASHRAE GUIDELINE 0-2005, ANNEX O.
   1. PRIOR TO SUBSTANTIAL COMPLETION THE FOLLOWING DOCUMENTATION SHOULD BE SUBMITTED TO THE CXA FOR REVIEW, COMMENT AND COMPILATION AS THE PROJECT SYSTEMS MANUAL:
      A. EXECUTIVE SUMMARY OF THE COMMISSIONING PROCESS (COMPLETED BY CXA)
      B. OWNERS PROJECT REQUIREMENTS (PROVIDED BY OWNER)
      C. BASIS OF DESIGN (DEVELOPED BY DESIGN TEAM)
      D. SINGLE LINE DIAGRAMS (PROVIDED BY SUBCONTRACTORS)
      E. CONSTRUCTION RECORD DOCUMENTS AND SPECIFICATIONS (DEVELOPED BY DESIGN TEAM)
      F. APPROVED SUBMITTALS (PROVIDED BY GC OR PM)
      G. AS BUILT SEQUENCE OF OPERATIONS (PROVIDED BY CONTROLS CONTRACTOR OR OTHER SUBCONTRACTORS)
      H. ORIGINAL SET POINTS FOR ALL SYSTEMS COMMISSIONED (PROVIDED BY CONTROLS CONTRACTOR OR OTHER SUBCONTRACTORS)
      I. RECOMMENDED SCHEDULE FOR RECOMMISSIONING (PROVIDED BY CXA)
      J. RECOMMENDED SCHEDULE FOR SENSOR CALIBRATION (PROVIDED BY CONTROLS CONTRACTOR OR OTHER SUBCONTRACTORS)
      K. EQUIPMENT OPERATION AND MAINTENANCE MANUALS (PROVIDED BY GC OR PM)
      L. EQUIPMENT PREVENTATIVE MAINTENANCE SCHEDULES (PROVIDED BY SUBCONTRACTORS)
      M. CONFIRMATION THAT TRAINING WAS COMPLETED FOR THE OWNER AND OCCUPANTS (PROVIDED BY CXA)
      N. ONGOING SYSTEMS OPTIMIZATION PROCEDURES (PROVIDED BY CXA AND OTHER TEAM MEMBERS)
      O. FINAL COMMISSIONING REPORT (PROVIDED BY CXA)
   2. THE DOCUMENTATION AND ITEMS DETAILED ABOVE SHOULD BE PROVIDED TO THE CXA IN ELECTRONIC FORMAT (MICROSOFT WORD OR PDF) FOR EASE OF SYSTEMS MANUAL DEVELOPMENT IN ELECTRONIC FORMAT FOR DELIVERY TO OWNER.

3.8 CURRENT FACILITIES REQUIREMENTS

A. THE CURRENT FACILITY REQUIREMENTS (CFR) AND OPERATIONS AND MAINTENANCE PLAN CONTAINS THE INFORMATION NECESSARY TO OPERATE THE BUILDING EFFICIENTLY.
   1. PRIOR TO SUBSTANTIAL COMPLETION THE FOLLOWING DOCUMENTATION SHOULD BE SUBMITTED TO THE CXA FOR REVIEW, COMMENT AND COMPILATION AS THE PROJECT CFR DOCUMENTATION:
      A. SEQUENCE OF OPERATIONS FOR THE BUILDING (PROVIDED BY CONTROLS CONTRACTOR OR OTHER SUBCONTRACTORS)
      B. BUILDING OCCUPANCY SCHEDULE (PROVIDED BY OWNER, PM OR ANOTHER APPROPRIATE TEAM MEMBER))
      C. EQUIPMENT RUN-TIME SCHEDULES (PROVIDED BY CONTROLS CONTRACTOR OR OTHER SUBCONTRACTORS)
      D. SETPOINTS FOR ALL HVAC EQUIPMENT (PROVIDED BY CONTROLS CONTRACTOR OR OTHER SUBCONTRACTORS);
      E. LIGHTING LEVELS THROUGHOUT THE BUILDING (PROVIDED BY LIGHTING VENDOR OR ELECTRICAL CONTRACTOR)
      F. MINIMUM OUTSIDE AIR REQUIREMENTS (PROVIDED BY MECHANICAL CONTRACTOR OR DESIGN ENGINEER)
      G. CHANGES IN SCHEDULES OR SETPOINTS FOR DIFFERENT SEASONS, DAYS OF THE WEEK, AND TIMES OF DAY (PROVIDED BY CONTROLS OR MECHANICAL CONTRACTOR OR DESIGN ENGINEER)
      H. SYSTEMS NARRATIVE DESCRIBING THE MECHANICAL AND ELECTRICAL SYSTEMS AND EQUIPMENT (PROVIDED BY RESPONSIBLE SUBCONTRACTOR)
      I. PREVENTIVE MAINTENANCE PLAN FOR BUILDING EQUIPMENT DESCRIBED IN THE SYSTEMS NARRATIVE (PROVIDED BY RESPONSIBLE SUBCONTRACTOR)
      J. COMMISSIONING PROGRAM THAT INCLUDES PERIODIC COMMISSIONING REQUIREMENTS, ONGOING COMMISSIONING TASKS, AND CONTINUOUS TASKS FOR CRITICAL FACILITIES (PROVIDED BY CXA)

3.9 WRITTEN WORK PRODUCTS

A. CXA SHALL PROVIDE REPORTS AS NECESSARY TO OWNER AS CONSTRUCTION AND COMMISSIONING PROGRESSES.

B. CXA TO REGULARLY COMMUNICATE WITH COMMISSIONING TEAM, APPRISING THEM OF COMMISSIONING PROGRESS AND SCHEDULING CHANGES THROUGH MEMOS, SITE VISIT REPORTS AND ISSUES LOG.

C. THE COMMISSIONING PROCESS GENERATES SEVERAL WRITTEN WORK PRODUCTS DESCRIBED IN VARIOUS PARTS OF THE SPECIFICATIONS.

D. COMMISSIONING REPORT: CXA COMPILES FINAL COMMISSIONING REPORT WHICH SUMMARIZES TASKS, FINDINGS, AND DOCUMENTATION OF COMMISSIONING PROCESS. THE REPORT ADDRESSES ACTUAL PERFORMANCE OF BUILDING SYSTEMS IN REFERENCE TO DESIGN INTENT AND CONTRACT DOCUMENTS AND INCLUDES AN EXECUTIVE SUMMARY OF THE PROCESS AND RESULTS OF THE COMMISSIONING PROGRAM, INCLUDING OBSERVATIONS, CONCLUSIONS AND ANY OUTSTANDING ITEMS, A HISTORY OF ANY SYSTEM DEFICIENCIES IDENTIFIED AND HOW THEY WERE RESOLVED, INCLUDING ANY OUTSTANDING ISSUES OR SEASONAL TESTING SCHEDULED FOR A LATER DATE AND SYSTEMS PERFORMANCE TEST RESULTS AND EVALUATION. ALSO INCLUDED IS A SUMMARY OF THE DESIGN AND SUBMITTAL REVIEW PROCESS AND A SUMMARY OF THE O&M DOCUMENTATION AND TRAINING PROCESS.

3.10 DEFERRED TESTING

A. UNFORESEEN DEFERRED TESTS: FUNCTIONAL TESTING THAT CANNOT BE COMPLETED DUE TO BUILDING STRUCTURE, REQUIRED OCCUPANCY CONDITION, OR OTHER DEFICIENCY MAY BE DELAYED UPON APPROVAL OF OWNER. TESTS ARE CONDUCTED IN SAME MANNER AS SEASONAL TESTS AS SOON AS PRACTICAL AND POSSIBLE.

B. SEASONAL TESTING: SEASONAL VARIATION IN OPERATIONS OR CONTROL STRATEGIES MAY REQUIRE ADDITIONAL TESTING DURING OPPOSITE SEASON TO VERIFY PERFORMANCE OF HVAC SYSTEM AND CONTROLS.

C. ALL TESTS: EXECUTED AND DOCUMENTED, WITH DEFICIENCIES CORRECTED BY APPROPRIATE CONTRACTORS. FINAL ADJUSTMENTS TO O&M MANUALS, RECORD DRAWINGS AND COMMISSIONING REPORT DUE TO TESTING ARE ALSO COMPLETED.

3.11 OPERATION AND MAINTENANCE TRAINING

A. THE GC SHALL BE RESPONSIBLE FOR TRAINING COORDINATION AND SCHEDULING AND ULTIMATELY FOR ENSURING THAT TRAINING IS COMPLETED.

B. THE TRAINING SESSIONS MAY BE VIDEO TAPED PER THE OWNERS’ REQUIREMENTS AND PROVIDED TO THE OWNER AS A DELIVERABLE.

C. EACH SUBCONTRACTOR AND VENDOR RESPONSIBLE FOR TRAINING WILL SUBMIT A WRITTEN TRAINING PLAN TO THE CXA AND OWNER FOR REVIEW AND APPROVAL PRIOR TO TRAINING. THE PLAN WILL COVER THE FOLLOWING ELEMENTS:
   1. INTENDED AUDIENCE
   2. LOCATION OF TRAINING
   3. LIST OF SYSTEMS AND EQUIPMENT
   4. A ROBUST TRAINING PROGRAM WILL ADDRESS THE FOLLOWING:
      A. EMERGENCY INSTRUCTIONS AND PROCEDURES
      B. OPERATION INSTRUCTION AND PROCEDURES
      C. TROUBLESHOOTING PROCEDURES
      D. MAINTENANCE AND INSPECTION PROCEDURES
      E. REPAIR PROCEDURES
      F. UPKEEP OF THE SYSTEMS MANUAL, CFR DOCUMENTATION AND ASSOCIATED MAINTENANCE DOCUMENTATION LOGS
   5. METHODS (CLASSROOM LECTURE, VIDEO, SITE WALK-THROUGH, ACTUAL OPERATIONAL DEMONSTRATIONS, WRITTEN HANDOUTS, ETC.)
   6. SUBJECTS COVERED (DESCRIPTION, DURATION OF DISCUSSION, SPECIAL METHODS, ETC.)
   7. DURATION OF TRAINING ON EACH SUBJECT
   8. INSTRUCTOR FOR EACH SUBJECT

D. CONTRACTOR SHALL PROVIDE TRAINING SESSION AGENDAS AND SIGN IN SHEETS IDENTIFYING WHO ATTENDED EACH TRAINING SESSION

3.12 BUILDING OPERATIONS REVIEW

A. THE CXA WILL COORDINATE WITH THE OWNER AND THE O&M STAFF TO REVIEW THE FACILITY AND ITS PERFORMANCE 8 TO 10 MONTHS AFTER HANDOVER OF THE FACILITY. ANY OUTSTANDING CONSTRUCTION DEFICIENCIES IDENTIFIED IN THIS POST-OCCUPANCY REVIEW WILL BE DOCUMENTED AND CORRECTED UNDER MANUFACTURER OR CONTRACTOR WARRANTIES.

B. THE CXA REVIEW OF THE BUILDING OPERATION WITH OPERATIONS STAFF AND OCCUPANTS SHOULD IDENTIFY ANY PROBLEMS IN OPERATING THE BUILDING AS ORIGINALLY INTENDED. ANY SIGNIFICANT ISSUES IDENTIFIED BY THE CXA THAT WILL NOT BE CORRECTED SHOULD BE RECORDED IN THE SYSTEMS MANUAL.
   1. COMMISSIONING AUTHORITY (CXA) RESPONSIBILITIES.
      A. COORDINATE AND SUPERVISE SEASONAL OR DEFERRED TESTING AND DEFICIENCY CORRECTIONS.
      B. PROVIDES THE OWNER WITH SYSTEMS MANUAL THAT PROVIDES TENANTS INFORMATION NEEDED TO UNDERSTAND AND OPERATE THE COMMISSIONED SYSTEMS.
      C. PROVIDE POST OCCUPANCY AND BUILDING OPERATION REVIEW WITH O&M STAFF INCLUDING A PLAN FOR RESOLUTION OF OUTSTANDING COMMISSIONING RELATED ISSUES WITHIN 10 MONTHS AFTER OCCUPANCY.
   2. TECHNICAL STAFF (OS) RESPONSIBILITIES:
      A. INSURE SEASONAL OR DEFERRED TESTING AND DEFICIENCY ISSUES ARE ADDRESSED.
      B. ATTEND POST OCCUPANCY AND BUILDING OPERATION REVIEW SESSION WITH THE CXA AND APPROPRIATE SUBCONTRACTORS.
   3. DESIGN TEAM (A/E AND GC) WARRANTY RESPONSIBILITIES:
      A. ASSIST IN RESOLUTION OF SYSTEM DEFICIENCIES IDENTIFIED DURING WARRANTY PERIOD COMMISSIONING.
   4. GENERAL CONTRACTOR (GC) RESPONSIBILITIES:
      A. ENSURE SUBCONTRACTORS EXECUTE REQUIRED SEASONAL OR DEFERRED FUNCTIONAL PERFORMANCE TESTING.
      B. ENSURE SUBCONTRACTORS CORRECT DEFICIENCIES AND MAKE NECESSARY ADJUSTMENTS TO O&M MANUALS AND RECORD DRAWINGS FOR ISSUES IDENTIFIED DURING WARRANTY PERIOD.
      C. ASSIST CXA DURING WARRANTY PERIOD REVIEW BY COORDINATING CONTRACTOR PRESENCE AND IDENTIFIED DEFICIENCY RESOLUTION.
   5. MECHANICAL, ELECTRICAL, CONTROLS, AND TAB CONTRACTOR (SUBCONTRACTORS) RESPONSIBILITIES:
      A. EXECUTE SEASONAL OR DEFERRED FUNCTIONAL PERFORMANCE TESTING.
      B. CORRECT DEFICIENCIES AND MAKE NECESSARY ADJUSTMENTS TO O&M MANUALS AND RECORD DRAWINGS FOR ISSUES IDENTIFIED DURING WARRANTY PERIOD.
      C. AT THE REQUEST OF THE CXA, CONTRACTORS WILL BE PRESENT ON THE PROJECT SITE DURING WARRANTY PERIOD REVIEW WITH REQUIRED INSTRUMENTATION TO CONFIRM PROPER SYSTEM OPERATION BEFORE EXPIRATION OF WARRANTY.

3.13 ON GOING COMMISSSIONINNG PLAN

A. BEFORE OR AS PART OF THE 10-MONTH REVIEW OF BUILDING OPERATIONS, THE CXA WILL DEVELOP AND ISSUE AN ONGOING COMMISSIONING PLAN.

B. THE PLAN SHOULD PROVIDE THE BUILDING’S OPERATING STAFF WITH PROCEDURES, BLANK TEST FORMS, AND A SCHEDULE FOR ONGOING CX ACTIVITIES.
   1. ON GOING COMMISSIONING PLAN MUST INCLUDE THE FOLLOWING:
      A. DEFINITION OF THE ONGOING COMMISSIONING PROCESS
      B. DEFINED ROLES AND RESPONSIBILITIES
      C. RECOMMENDED SCHEDULE FOR RECOMMISSIONING AS-BUILT SYSTEMS
      D. CONTINUOUS DOCUMENTATION AND UPDATING OF BUILDING OPERATING PLAN AND CURRENT FACILITY REQUIREMENTS THROUGHOUT THE BUILDING’S LIFETIME
      E. BLANK TESTING MATERIALS, INCLUDING FUNCTIONAL PERFORMANCE TESTS FOR ALL COMMISSIONED AS-BUILT SYSTEMS IN THE BUILDING, AS WELL AS AN ISSUES LOG
      F. DIRECTION FOR TESTING NEW AND RETROFITTED EQUIPMENT

END OF SECTION

SECTION 01900 - WARRANTIES

1.1 GENERAL

A. STANDARD PRODUCT WARRANTIES ARE PREPRINTED WRITTEN WARRANTIES PUBLISHED BY INDIVIDUAL MANUFACTURERS FOR PARTICULAR PRODUCTS AND ARE SPECIFICALLY ENDORSED BY THE MANUFACTURER TO THE OWNER.

B. SPECIAL WARRANTIES ARE WRITTEN REQUIRED BY OR INCORPORATED IN THE CONTRACT DOCUMENTS, EITHER TO EXTEND TIME LIMITS PROVIDED BY STANDARD WARRANTIES OR TO PROVIDE GREATER RIGHTS FOR THE OWNER. REFER TO THE GENERAL CONDITIONS FOR TERMS FOR THE CONTRACTOR'S PERIOD FOR CORRECTION OF THE WORK.

C. DISCLAIMERS AND LIMITATIONS: MANUFACTURER'S DISCLAIMERS ARE LIMITATIONS ON PRODUCT WARRANTIES DO NOT RELIEVE THE CONTRACTOR OF THE WARRANTY OF THE WORK THAT INCORPORATES THE PRODUCTS. MANUFACTURER'S DISCLAIMERS AND LIMITATIONS ON PRODUCT WARRANTIES DO NOT RELIVE SUPPLIERS, MANUFACTURERS, AND SUBCONTRACTORS REQUIRED TO COUNTERSIGN SPECIAL WARRANTIES WITH THE CONTRACTOR.

D. RELATED DAMAGES AND LOSSES: WHEN CORRECTING FAILED OR DAMAGED WARRANTED CONSTRUCTION, REMOVE AND REPLACE CONSTRUCTION THAT HAS BEEN DAMAGED AS A RESULT OF SUCH FAILURE, OR MUST BE REMOVED AND REPLACED TO PROVIDE ACCESS FOR CORRECTION OF WARRANTED CONSTRUCTION.

E. REINSTATEMENT OF WARRANTY: WHEN WORK COVERED BY A WARRANTY HAS FAILED AND BEEN CORRECTED BY REPLACEMENT OR REBUILDING, REINSTATE THE WARRANTY BY WRITTEN ENDORSEMENT. THE REINSTATED WARRANTY SHALL BE EQUAL TO THE ORIGINAL WARRANTY WITH AND EQUITABLE ADJUSTMENT FOR DEPRECIATION.

F. REPLACEMENT COST: UPON DETERMINATION THAT WORK COVERED BY A WARRANTY HAS FAILED, REPLACE OR REBUILD THE WORK TO AN ACCEPTABLE CONDITION COMPLYING WITH REQUIREMENTS OF THE CONTRACT DOCUMENTS. THE CONTRACTOR IS RESPONSIBLE FOR THE COST OF REPLACING OR REBUILDING DEFECTIVE WORK, REGARDLESS OF WHETHER THE OWNER HAS BENEFITED FROM USE OF THE WORK THROUGH A PORTION OF ITS ANTICIPATED USEFUL SERVICE LIFE.

G. OWNER'S RECOURSE: EXPRESSED WARRANTIES MADE TO THE OWNER ARE IN ADDITION TO IMPLIED WARRANTIES AND SHALL NOT LIMIT THE DUTIES, OBLIGATIONS, RIGHTS AND REMEDIES OTHERWISE AVAILABLE UNDER THE LAW. EXPRESSED WARRANTY PERIODS SHALL NOT BE INTERPRETED AS LIMITATIONS ON THE TIME IN WHICH THE OWNER CAN ENFORCE SUCH DUTIES, OBLIGATIONS, RIGHTS OR REMEDIES.

H. REJECTION OF WARRANTIES: THE OWNER RESERVES THE RIGHT TO REJECT WARRANTIES AND TO LIMIT SELECTION TO PRODUCTS WITH WARRANTIES NOT IN CONFLICT WITH REQUIREMENTS OF THE CONTRACT DOCUMENTS.

I. WHEN THE CONTRACT DOCUMENTS REQUIRE A SPECIAL WARRANTY, OR SIMILAR COMMITMENT, THE OWNER RESERVES THE RIGHT TO REFUSE TO ACCEPT THE WORK, UNTIL THE CONTRACTOR PRESENTS EVIDENCE THAT ENTITIES REQUIRED TO COUNTERSIGN SUCH COMMITMENTS ARE WILLING TO DO SO.

J. SUBMIT WRITTEN WARRANTIES TO THE ARCHITECT PRIOR TO THE DATE CERTIFIED FOR SUBSTANTIAL COMPLETION. IF THE ARCHITECT'S CERTIFICATE OF SUBSTANTIAL COMPLETION DESIGNATES A COMMENCEMENT DATE FOR WARRANTIES OTHER THAN THE DATE OF SUBSTANTIAL COMPLETION, SUBMIT WRITTEN WARRANTIES UPON REQUEST OF THE ARCHITECT.

K. WHEN A DESIGNATED PORTION OF THE WORK IS COMPLETED AND OCCUPIED OR USED BY THE OWNER, BY SEPARATE AGREEMENT WIT THE CONTRACTOR DURING THE CONSTRUCTION PERIOD, SUBMIT PROPERLY EXECUTED WARRANTIES TO THE ARCHITECT WITHIN FIFTEEN (15) DAYS OF COMPLETION OF THAT DESIGNATED PORTION OF THE WORK.

L. WHEN THE CONTRACT DOCUMENTS REQUIRE THE CONTRACTOR, OR THE CONTRACTOR AND A SUBCONTRACTOR, SUPPLIER OR MANUFACTURER TO EXECUTE A SPECIAL WARRANTY, PREPARE A WRITTEN DOCUMENT THAT CONTAINS APPROPRIATE TERMS AND IDENTIFICATION, READY FOR EXECUTION BY THE REQUIRED PARTIES. SUBMIT A DRAFT TO THE OWNER, THROUGH THE ARCHITECT, FOR APPROVAL PRIOR TO FINAL EXECUTION.

M. BIND WARRANTIES AND BONDS IN HEAVY-DUTY, COMMERCIAL-QUALITY, DURABLE 3-RING VINYL-COVERED LOOSE-LEAF BINDERS, THICKNESS AS NECESSARY TO ACCOMMODATE CONTENTS, AND SIZED TO RECEIVE 8-1/2 BY 11 INCH PAPER.

N. PROVIDE HEAVY PAPER DIVIDERS WITH CELLULOID COVERED TABS FOR EACH SEPARATE WARRANTY. MARK THE TAB TO IDENTIFY THE PRODUCT OR INSTALLATION. PROVIDE A TYPED DESCRIPTION OF THE PRODUCT OR INSTALLATION, INCLUDING THE NAME OF THE PRODUCT, AND THE NAME, ADDRESS, AND TELEPHONE NUMBER OF THE INSTALLER.

O. IDENTIFY EACH BINDER ON THE FRONT AND SPINE WITH THE TYPED OR PRINTED TITLE "WARRANTIES," PROJECT TITLE OR NAME, AND NAME OF THE CONTRACTOR.

Architect:

brr

ARCHITECT OF RECORD:
BRR ARCHITECTURE, INC
8131 METCALF AVE
SUITE 300
OVERLAND PARK, KS 66204

www.brrarch.com

TEL: 913-262-9095
FAX: 913-262-9044

COPYRIGHT NOTICE

This drawing was prepared for use on a specific site contemporaneously with its issue date and it is not suitable for use on a different project site or at a later time. Use of this drawing for reference or example on another project requires the services of properly licensed architects and engineers. Reproduction of this drawing for reuse on another project is not authorized and may be contrary to the law.

Engineer:

Project Owner:

NIKE, Inc.
One Bowerman Drive
Beaverton, OR 97005
(503) 671-6453
www.nike.com

Project Address:

NIKE FACTORY STORE
WATERFORD LAKES
SHOPPING CENTER
449 N. ALAFAYA TRAIL
ORLANDO, FL 32828
TEMPLATE ISSUE DATE: 11/28/2018

Fixture Package: UNITE

Stamp: NOT FOR CONSTRUCTION

Issued For: PERMIT/BID

Issue Date: 11/06/2020

Revisions:

NO.	REASON	DATE

PROJECT MANAGER: KH
CHECKED BY:
DRAWN BY: RAN

Project Number: 62301411

Sheet Title: ARCHITECTURAL SPECIFICATIONS

Sheet Number: AS4.0

SECTION 018119 - CONSTRUCTION INDOOR AIR QUALITY

PART 1 - GENERAL

1.1 RELATED DOCUMENTS

A. DRAWINGS AND GENERAL PROVISIONS OF THE CONTRACT, INCLUDING GENERAL AND SUPPLEMENTARY CONDITIONS AND OTHER DIVISION 1 SPECIFICATION SECTIONS, APPLY TO THIS SECTION.

1.2 SUMMARY

A. THIS SECTION DESCRIBES CONSTRUCTION INDOOR AIR QUALITY (IAQ) GOALS AND INCLUDES ADMINISTRATIVE AND PROCEDURAL REQUIREMENTS FOR THE DEVELOPMENT AND EXECUTION OF A CONSTRUCTION AIR QUALITY MANAGEMENT PLAN.

B. RELATED SECTIONS INCLUDE THE FOLLOWING:

1. DIVISION 1 SECTION "SUBMITTAL PROCEDURES" FOR REQUIRED SUBMITTAL PROCEDURES.
2. DIVISION 1 SECTION "TEMPORARY FACILITIES AND CONTROLS" REQUIREMENTS FOR INSTALLATION, MAINTENANCE AND REMOVAL OF TEMPORARY UTILITIES, CONTROLS, AND FACILITIES DURING CONSTRUCTION.
3. DIVISION 1 SECTION "LEED REQUIREMENTS" FOR SPECIAL REQUIREMENTS FOR LEED CERTIFICATION.

1.3 IAQ MANAGEMENT SUMMARY

A. THE OWNER HAS ESTABLISHED THAT THE CONTRACTOR SHALL PREVENT INDOOR AIR QUALITY PROBLEMS RESULTING FROM THE CONSTRUCTION PROCESS, TO SUSTAIN LONG TERM INSTALLER AND OCCUPANT HEALTH AND COMFORT.

B. PROTECT THE VENTILATION SYSTEM COMPONENTS DURING CONSTRUCTION AND CLEAN CONTAMINATED COMPONENTS AFTER CONSTRUCTION IS COMPLETE.

C. CONTROL SOURCES OF POTENTIAL IAQ POLLUTANTS BY CONTROLLING SELECTION OF MATERIALS AND PROCESSES USED IN PROJECT CONSTRUCTION.

1.4 SUBMITTALS

A. IAQ MANAGEMENT PLAN FOR THE CONSTRUCTION AND PRE-OCCUPANCY PHASES OF THE PROJECT.

B. PHOTOGRAPHS DOCUMENTING CONSTRUCTION IAQ MANAGEMENT MEASURES IMPLEMENTED DURING CONSTRUCTION AND PRE-OCCUPANCY INCLUDING: METHODS EMPLOYED TO PROTECT ABSORPTIVE MATERIALS FROM MOISTURE DAMAGE, HVAC PROTECTION, SOURCE CONTROL AND OTHER MEASURES IMPLEMENTED. PHOTOS MUST BE DATE AND TIME STAMPED AND INCLUDING A DESCRIPTION OF WHAT IS BEING SHOWN AND SHOULD BE FROM AT LEAST 2 SEPARATE OCCASIONS.

C. IF PERMANENT AIR HANDLERS WERE USED PRIOR TO OCCUPANCY CUT SHEETS OF FILTRATION MEDIA USED DURING CONSTRUCTION WITH MERV VALUES HIGHLIGHTED MUST BE PROVIDED. THE DATE OF OCCUPANCY AND THE PRE-OCCUPANCY REPLACEMENT DATE OF THE FILTER MUST BE PROVIDED.

1.5 CONSTRUCTION AIR QUALITY MANAGEMENT PLAN

A. DEVELOP A DRAFT INDOOR AIR QUALITY (IAQ) MANAGEMENT PLAN FOR THE CONSTRUCTION AND PRE-OCCUPANCY PHASES OF THE BUILDING AS FOLLOWS:

1. DURING CONSTRUCTION MEET OR EXCEED THE MINIMUM REQUIREMENTS OF THE SHEET METAL AND AIR CONDITIONING NATIONAL CONTRACTORS ASSOCIATION (SMACNA) IAQ GUIDELINES FOR OCCUPIED BUILDINGS UNDER CONSTRUCTION 2ND EDITION, 2007, ANSI/SMACNA 008–2008, CHAPTER 3.
2. PROTECT STORED ON-SITE OR INSTALLED ABSORPTIVE MATERIALS FROM MOISTURE DAMAGE.
3. NO SMOKING WITHIN 25' OF THE CONSTRUCTION SITE.

B. THE SMACNA IAQ GUIDELINES FOR OCCUPIED BUILDINGS UNDER CONSTRUCTION PROVIDES AN OVERVIEW OF AIR POLLUTION ASSOCIATED WITH CONSTRUCTION, CONTROL MEASURES, CONSTRUCTION PROCESS MANAGEMENT, QUALITY CONTROL, COMMUNICATING WITH OCCUPANTS, AND CASE STUDIES. THESE GUIDELINES CAN BE ACCESSED AT WWW.SMACNA.ORG. CHAPTER 3 OF THE SMACNA GUIDELINES RECOMMENDS CONTROL MEASURES IN FIVE AREAS: HVAC PROTECTION, SOURCE CONTROL, PATHWAY INTERRUPTION, HOUSEKEEPING, AND SCHEDULING. REVIEW THE APPLICABILITY OF EACH CONTROL MEASURE AND INCLUDE THOSE THAT APPLY IN THE DRAFT IAQ MANAGEMENT PLAN.

1. HVAC PROTECTION: SHUT DOWN THE RETURN SIDE OF THE HVAC SYSTEM WHENEVER POSSIBLE DURING HEAVY CONSTRUCTION. IF THE SYSTEM MUST REMAIN OPERATIONAL DURING CONSTRUCTION INCLUDE THE FOLLOWING STRATEGIES THAT APPLY:
   a. FIT ALL RETURN AIR GRILLES WITH TEMPORARY FILTERS WITH A MINIMUM EFFICIENCY REPORTING VALUE (MERV) OF 8.
   b. ISOLATE THE RETURN SIDE OF THE HVAC SYSTEM FROM THE SURROUNDING ENVIRONMENT AS MUCH AS POSSIBLE (E.G., PLACE ALL TILES FOR THE CEILING PLENUM, REPAIR ALL DUCTS AND AIR HANDLER LEAKS).
   c. DAMPER OFF THE RETURN SYSTEM IN THE HEAVIEST WORK AREAS AND SEAL THE RETURN SYSTEM OPENINGS WITH PLASTIC.
   d. UPGRADE THE FILTER EFFICIENCY WHERE MAJOR LOADING IS EXPECTED TO AFFECT OPERATING HVAC SYSTEM.
   e. CLEAN PERMANENT RETURN AIR DUCTWORK PER NATIONAL AIR DUCT CLEANING ASSOCIATION STANDARDS UPON COMPLETION OF ALL CONSTRUCTION AND FINISH INSTALLATION WORK.
   f. REPLACE ALL FILTRATION MEDIA PRIOR TO OCCUPANCY.
   g. PROHIBIT THE USE OF TOBACCO PRODUCTS INSIDE THE BUILDING AND WITHIN 25 FEET (8 METERS) OF THE BUILDING ENTRANCE DURING CONSTRUCTION.
2. SOURCE CONTROL: PROPOSE THE SUBSTITUTION OF NON-TOXIC FORMULATIONS OF MATERIALS THAT ARE GENERALLY THE RESPONSIBILITY OF THE CONTRACTOR SUCH AS CAULKS, SEALANTS, AND CLEANING PRODUCTS.
3. PATHWAY INTERRUPTION: PREVENT CONTAMINATION OF CLEAN SPACES. INCLUDE THE FOLLOWING STRATEGIES THAT APPLY:
   a. ERECT SOME TYPE OF BARRIER BETWEEN WORK AREAS OR BETWEEN THE INSIDE AND OUTSIDE OF THE BUILDING TO PREVENT UNWANTED AIRFLOW FROM DIRTY TO CLEAN AREAS.
4. HOUSEKEEPING: REDUCE CONSTRUCTION CONTAMINATION IN THE BUILDING PRIOR TO OCCUPANCY THROUGH HVAC AND REGULAR SPACE CLEANING ACTIVITIES.
   a. STORE BUILDING MATERIALS IN A WEATHER TIGHT, CLEAN AREA PRIOR TO UNPACKING FOR INSTALLATION.
   b. CHECK FOR POSSIBLE DAMAGE TO BUILDING MATERIALS FROM HIGH HUMIDITY.
   c. CLEAN ALL COILS, AIR FILTERS, AND FANS BEFORE TESTING AND BALANCING PROCEDURES ARE PERFORMED.
5. SCHEDULING: SPECIFY CONSTRUCTION SEQUENCING TO REDUCE ABSORPTION OF VOC'S BY MATERIALS THAT ACT AS SINKS OR CONTAMINANT SOURCES. COMPLETE APPLICATION OF WET AND ODOR-EMITTING MATERIALS SUCH AS PAINTS, SEALANTS, AND COATINGS BEFORE INSTALLING SINK MATERIALS SUCH AS CEILING TILES, CARPETS, INSULATION, GYPSUM PRODUCTS, AND FABRIC-COVERED FURNISHINGS ARE INSTALLED.
   a. PROTECT STORED ON-SITE OR INSTALLED ABSORPTIVE MATERIALS FROM EXPOSURE TO MOISTURE THROUGH PRECIPITATION, PLUMBING LEAKS, OR CONDENSATION FROM THE HVAC SYSTEM TO PREVENT MICROBIAL CONTAMINATION.

C. DRAFT IAQ MANAGEMENT PLAN REVIEW MEETING: ONCE THE OWNER AND ARCHITECT HAVE REVIEWED THE DRAFT IAQ MANAGEMENT PLAN AND PRIOR TO CONSTRUCTION AT THE SITE, SCHEDULE AND CONDUCT A MEETING TO REVIEW THE DRAFT IAQ MANAGEMENT PLAN AND DISCUSS PROCEDURES, SCHEDULES AND SPECIFIC REQUIREMENTS FOR IAQ DURING THE CONSTRUCTION AND PRE-CONSTRUCTION PHASES OF THE BUILDING. DISCUSS COORDINATION AND INTERFACE BETWEEN THE CONTRACTOR AND OTHER CONSTRUCTION ACTIVITIES. IDENTIFY AND RESOLVE PROBLEMS WITH COMPLIANCE TO THE REQUIREMENTS. RECORD MINUTES OF THE MEETING, IDENTIFY ALL CONCLUSIONS REACHED AND MATTERS REQUIRING FURTHER RESOLUTION.

1. ATTENDEES: THE CONTRACTOR AND RELATED CONTRACTOR PERSONNEL ASSOCIATED WITH THE WORK OF THIS SECTION, INCLUDING PERSONNEL TO BE IN CHARGE OF THE IAQ MANAGEMENT PROGRAM, ARCHITECT, OWNER AND SUCH ADDITIONAL PERSONNEL AS THE ARCHITECT OR OWNER DEEM APPROPRIATE.

D. FINAL IAQ MANAGEMENT PLAN: MAKE ANY REVISIONS TO THE DRAFT IAQ MANAGEMENT PLAN AGREED UPON DURING THE MEETING IDENTIFIED IN ITEM (C) ABOVE AND INCORPORATE RESOLUTIONS AGREED TO BE MADE SUBSEQUENT TO THE MEETING. SUBMIT THE REVISED PLAN TO THE OWNER AND ARCHITECT FOR APPROVAL WITHIN 10 CALENDAR DAYS OF THE MEETING.

PART 2 - PRODUCTS (NOT USED)

PART 3 - EXECUTION

3.1 IMPLEMENTATION OF IAQ MANAGEMENT PLAN

A. MANAGER: THE CONTRACTOR SHALL DESIGNATE AN ON-SITE PARTY (OR PARTIES) RESPONSIBLE FOR INSTRUCTING WORKERS AND OVERSEEING AND THE IAQ MANAGEMENT PLAN FOR THE PROJECT.

B. PROGRESS MEETINGS: CONSTRUCTION RELATED IAQ PROCEDURES SHALL BE INCLUDED IN THE PRE-CONSTRUCTION AND CONSTRUCTION PROGRESS MEETING AGENDAS.

C. DISTRIBUTION: THE CONTRACTOR SHALL DISTRIBUTE COPIES OF THE IAQ MANAGEMENT PLAN TO THE JOB SITE FOREMAN, EACH SUBCONTRACTOR, THE OWNER, AND THE ARCHITECT.

D. INSTRUCTION: THE CONTRACTOR SHALL PROVIDE ON-SITE INSTRUCTION OF THE IAQ PROCEDURES AND ENSURE THAT ALL PARTICIPANTS IN THE CONSTRUCTION PROCESS UNDERSTAND THE IMPORTANCE OF THE GOALS OF THE IAQ MANAGEMENT PLAN.

END OF SECTION 01 81 19

SECTION 01905 - INSURANCE AND BONDS

1.1 GENERAL

A. LIABILITY INSURANCE

1. THE CONTRACTOR SHALL SECURE, PAY FOR AND MAINTAIN UNTIL ALL THE WORK IS COMPLETED AND UNTIL THE EXPIRATION OF ALL GUARANTEES AND WARRANTIES, SUCH INSURANCE AS WILL PROTECT HIM, NIKE, LANDLORD (AS OUTLINED IN TENANT HANDBOOK), AND THE ARCHITECT FROM CLAIMS DIRECTLY OR INDIRECTLY ARISING OR ALLEGED TO ARISE OUT OF THE PERFORMANCE OF OR FAILURE TO PERFORM THE WORK, OR THE CONDITION OF THE WORK OR THE JOB SITE, FROM CLAIMS BY WORKMEN, SUPPLIERS OR SUBCONTRACTORS, FROM CLAIMS UNDER ANY SCAFFOLDING, STRUCTURAL WORK OR SAFE PLACE LAW, OR ANY LAW WITH RESPECT TO PROTECTION OF ADJACENT LANDOWNERS, AND FROM ANY OTHER CLAIMS FOR DAMAGES OF PROPERTY, OR FOR BODILY INJURY, INCLUDING DEATH, WHICH MAY ARISE IN WHOLE OR IN PART FROM THE CONTRACTOR'S OPERATIONS UNDER THE CONTRACT, WHETHER SUCH OPERATIONS BE BY HIMSELF OR ANY SUBCONTRACTOR OR ANYONE DIRECTLY OR INDIRECTLY EMPLOYED BY ANY OF THEM. SUCH INSURANCE SHALL COVER ALL CONTRACTUAL OBLIGATIONS WHICH THE CONTRACTORS HAS ASSUMED, INCLUDING INDEMNIFICATIONS. NEITHER THE CONTRACTOR NOR HIS INSURER SHALL HAVE ANY CLAIM AGAINST THE OWNER, THE LANDLORD, THE ARCHITECT OR ANYONE ACTING FOR OR ON BEHALF OF EITHER OF THEM TO THE EXTENT THE CLAIM AGAINST THE CONTRACTOR IS OR SHOULD HAVE BEEN COVERED BY INSURANCE.

B. PROPERTY INSURANCE

1. THE CONTRACTOR SHALL ALSO SECURE, PAY FOR AND MAINTAIN, FOR THE PERIOD AGREED TO BY LANDLORD AND NIKE, FIRE, EXTENDED COVERAGE, BOILER VANDALISM AND MALICIOUS MISCHIEF INSURANCE ON THE WORK AND ANY MATERIALS, TOOLS, EQUIPMENT OR OTHER OBJECTS THE COST OR RENTAL OF WHICH IS CHARGEABLE TO THE OWNER UNDER THE CONTRACT. NEITHER THE CONTRACTOR NOR HIS INSURER SHALL HAVE ANY CLAIM AGAINST NIKE, THE LANDLORD, THE ARCHITECT OR ANYONE ACTION FOR OR ON BEHALF OF EITHER OF THEM TO THE EXTENT THE CLAIM AGAINST THE CONTRACTOR IS OR SHOULD HAVE BEEN COVERED.

2. THE CONTRACTOR SHALL NOT COMMENCE WORK UNDER THE CONTRACT UNTIL HE HAS OBTAINED ALL THE INSURANCE REQUIRED HEREUNDER FROM INSURANCE COMPANIES APPROVED BY THE LANDLORD, THE OWNER, NOR SHALL THE CONTRACTOR ALLOW ANY SUBCONTRACTOR TO COMMENCE WORK UNTIL ALL INSURANCE REQUIRED OF THE SUBCONTRACTOR HAS BEEN SO OBTAINED AND APPROVED. APPROVAL OF THE INSURANCE BY THE LANDLORD, THE OWNER SHALL NOT RELIEVE OR DECREASE THE LIABILITY OF THE CONTRACTOR HEREUNDER. THE CONTRACTOR AND EACH SUBCONTRACTOR SHALL MAINTAIN ALL INSURANCE REQUIRED UNDER THIS ARTICLE UNTIL FINAL ACCEPTANCE AND FOR NO LESS THAN ONE YEAR THEREAFTER, EXCEPT AS OTHERWISE SPECIFIED.

3. FAILURE TO SECURE THE INSURANCE COVERAGE, OR FAILURE TO COMPLY WITH ANY OF THE INSURANCE PROVISIONS OF THIS CONTRACT, OR FAILURE TO SECURE SUCH ENDORSEMENTS ON POLICIES AS MAY BE NECESSARY TO CARRY OUT THE TERMS AND PROVISION OF THIS CONTRACT, SHALL IN NO WAY ACT TO RELIEVE CONTRACTOR FROM OBLIGATIONS OF THIS CONTRACT.

C. CERTIFICATE OF PAYMENT

1. NO PAYMENT, COMPENSATION OR ADJUSTMENT OF ANY KIND (OTHER THAN THE EXTENSIONS OF TIME PROVIDED FOR IN THE CONTRACT) SHALL BE MADE TO THE CONTRACTOR BECAUSE OF HINDRANCE OR DELAYS FROM ANY CAUSE, WHETHER AVOIDABLE OR UNAVOIDABLE, IN THE PROGRESS OF THE WORK, NEITHER AN EXTENSION FOR ANY REASON IN THE CONTRACT TIME, NOR THE DOING OR ACCEPTANCE OF ANY PART OF THE WORK AFTER THE CONTRACT TIME SHALL BE DEEMED A WAIVER BY NIKE OF THE RIGHT OR NIKE TO TERMINATE THE CONTRACT AS PROVIDED IN THE CONTRACT OR TO ENFORCE ANY OTHER PROVISION OF THE CONTRACT. IF ANY DELAY ON THE PART OF THE CONTRACTOR RESULTS IN ANY CLAIM AGAINST THE OWNER OR THE ARCHITECT BY ANOTHER CONTRACTOR, THE CONTRACTOR SHALL IDENTIFY AND HOLD THEM HARMLESS THEREFROM.

2. NO CERTIFICATE FOR A PROGRESS PAYMENT, NOR ANY PROGRESS PAYMENT, NOR ANY PARTIAL OR ENTIRE USE OF OCCUPANCY OF THE PROJECT BY NIKE SHALL CONSTITUTE AN ACCEPTANCE OF THE WORK OR MATERIALS OR BE CONSTRUED OR RELIED UPON AS ANY INDICATION THAT THE WORK OR MATERIAL ARE IN ACCORDANCE WITH THE CONTRACT DOCUMENT\S, OR THAT THE AMOUNTS PAID OR CERTIFIED THEREFORE REPRESENT THE CORRECT COST OR VALUE OF THE WORK OR MATERIALS OR THAT SUCH AMOUNTS ARE, IN FACE OR LAW, DUE THE CONTRACTOR.

3. THE PROVISIONS FOR PAYMENT, WITHHOLDING, RETAINAGE AND CERTIFICATES FOR PAYMENT ARE SOLELY FOR THE BENEFIT OF NIKE AND NO OTHER PARTY (INCLUDING SURETIES OF THE CONTRACTOR) SHALL HAVE ANY NEGLIGENCE OR OTHER ACTION AGAINST NIKE, THE ARCHITECT OR ANYONE ACTING ON BEHALF OF EITHER OF THEM FROM WAIVING OR MISAPPLYING THESE PROVISIONS. BY ISSUING A CERTIFICATE FOR PAYMENT, THE ARCHITECT SHALL NOT THEREBY BE DEEMED TO REPRESENT THAT HE HAS MADE EXHAUSTIVE OR CONTINUOUS ON-SITE INSPECTIONS TO CHECK THE QUALITY OR QUANTITY OF THE WORK OR THAT HE HAS REVIEWED THE CONSTRUCTION MEANS, METHODS, TECHNIQUES, SEQUENCES OR PROCEDURES OR THAT HE HAS MADE ANY EXAMINATION TO ASCERTAIN HOW OR FOR WHAT PURPOSE THE CONTRACTOR HAS USED THE MONIES PREVIOUSLY PAID ON ACCOUNT OF THE CONTRACT SUM.

D. INDEMNIFICATION

1. THE CONTRACTOR SHALL, TO THE FULL EXTENT PERMITTED BY LAW, DEFEND, INDEMNIFY AND SAVE HARMLESS THE LANDLORD, OWNER AND ARCHITECTS P.S. AND THEIR RESPECTIVE DIRECTORS, OFFICERS, PARTNERS, EMPLOYEES AND AGENTS FROM ANY AND ALL CLAIMS DIRECTLY OR INDIRECTLY ARISING OR ALLEGED TO ARISE OUT OF THE PERFORMANCE OR THE FAILURE TO PERFORM THE WORK OR CONDITIONS OF THE WORK AND FROM ANY AND ALL CLAIMS BY WORKMEN, SUPPLIERS OR SUBCONTRACTORS INVOLVED IN PERFORMANCE OF THE WORK.

2. THE OBLIGATIONS SET FORTH IN THIS PARAGRAPH SHALL SPECIFICALLY INCLUDE, BUT SHALL NOT BE LIMITED TO, ALL CLAIMS DIRECTLY OR INDIRECTLY ARISING OR ALLEGED TO ARISE UNDER ANY CLAIMS ARISING SOLELY FROM THE ACTIVE NEGLIGENCE OF THE PARTY ASKING TO BE DEFENDED, INDEMNIFIED OR SAVED HARMLESS.

SECTION 03300 - CEMENTITIOUS OVERLAY

1.1 SUBMITTALS

A. SUBMIT ALL REQUIRED LEED DOCUMENTATION FOR MANDATORY AND DESIRABLE CREDITS NOTED IN PARAGRAPH 1.3 PER THE SUBMITTAL REQUIREMENTS, OUTLINED IN SECTION 01352.

RELATED LEED® CREDITS
LOW-EMITTING MATERIALS

2.1 PRODUCTS

A. MATERIALS

1. FAST-SETTING TROWELABLE UNDERLAYMENT SYSTEM:
   a. "ARDEX CP", BY ARDEX INC.: 412-264-4240.
   b. "RAPID SET TRU-PC HIGH PERFORMANCE SELF-LEVELING TOPPING"
2. ACCESSORIES: FURNISH PRIMERS AND SAND FILLERS AS RECOMMENDED BY THE OVERLAY MANUFACTURER FOR THE CONDITIONS OF THE PROJECT.

B. MIXING: THOROUGHLY MIX OVERLAY MATERIALS FOR EACH TYPE OF PRODUCT IN PROPER PROPORTIONS TO ACHIEVE SMOOTH HOMOGENEOUS MIX, FREE OF LUMPS.

C. PREPARATION

1. ENSURE THAT SUBSTRATE IS CLEAN, DRY, HARD, SOUND, AND FREE OF OILS, OR OTHER SUBSTANCE WHICH WOULD AFFECT PROPER BONDING AND CURING.
2. PROVIDE A MINIMUM 1/4 INCH DEEP SAW CUT ALONG THE PERIMETER OF EACH AREA TO RECEIVE THE CEMENTITIOUS OVERLAY. SAWCUT SHALL BE STRAIGHT AND UNIFORM WITH NO OVERCUTTING.
3. CHIP OUT CONCRETE SUBSTRATE AT THE PERIMETER IN THE AREA TO RECEIVE OVERLY IN ORDER TO MAINTAIN AN APPROXIMATE MINIMUM 1/4 INCH THICKNESS FOR THE INSTALLED OVERLAY. MAINTAIN CLEAN SAWCUT EDGE AT AREA TO REMAIN EXPOSED IN THE FINISHED WORK.
4. ABRADE OR SHOTBLAST SURFACES AS NECESSARY TO ACHIEVE A CLEAN ROUGH SURFACE. PROVIDE A MINIMUM 1/16 INCH PROFILE.
5. MASK ADJACENT SLAB SURFACES.
6. DO NOT BEGIN INSTALLATION UNTIL ALL UNSATISFACTORY CONDITIONS ARE RESOLVED. BEGINNING WORK CONSTITUTES ACCEPTANCE OF CONDITIONS AND RESPONSIBILITY FOR DEFECTIVE INSTALLATION CAUSED BY PRIOR OBSERVABLE CONDITIONS.

D. APPLICATION

1. INSTALL OVERLAY IN ACCORDANCE WITH THE MANUFACTURER'S RECOMMENDATIONS.
2. APPLY PRIMER TO ALL AREAS TO RECEIVE UNDERLAYMENT. REPEAT APPLICATION IF NECESSARY TO ACHIEVE PROPER BUILD.
3. FINISH TO A UNIFORMLY TAPERED SURFACE WITHIN TOLERANCES SPECIFIED FOR CONCRETE FLOORS.
4. PROVIDE NON-SLIP BROOM FINISH.
5. CURE IN ACCORDANCE WITH THE MANUFACTURER'S INSTRUCTIONS.

SECTION 03550 - CEMENTITIOUS UNDERLAYMENT

1.1 SUBMITTALS

A. SUBMIT ALL REQUIRED LEED DOCUMENTATION FOR MANDATORY AND DESIRABLE CREDITS NOTED IN PARAGRAPH 1.3 PER THE SUBMITTAL REQUIREMENTS, OUTLINED IN SECTION 01352.

RELATED LEED® CREDITS
LOW-EMITTING MATERIALS.

A. SECTION INCLUDES:

1. LEVELING OF EXISTING CAST-IN-PLACE CONCRETE SLABS.
2. RAMPS AND TAPERS AS NECESSARY TO CORRECT LEVELS BETWEEN DISSIMILAR FINISHES.

B. MATERIALS

1. FAST-SETTING SELF LEVELING UNDERLAYMENT SYSTEM: SELF-LEVELING, POURABLE, CEMENT BASED MATERIAL, MINIMUM 28 DAY COMPRESSIVE STRENGTH 4,500 PSI WHEN TESTED IN ACCORDANCE WITH ASTM C109; MINIMUM BOND STRENGTH 200 PSI; ONE OF THE FOLLOWING.
   a. "ULTRA/PLAN M20 PLUS PLANIBOND EBA" BY MAPEI CORPORATION: 800-42-MAPEI. SUPPLIER: SOUTHLAND FLOORING, CONTACT: DONNY ASLEY (513) 771-5912.
   b. "RAPID SET TRU PC" BY CTS CEMENT.; 800-929-3030.
   c. "LEVEL-RIGHT FS-10" BY MAXXON; 800-356-7887.
2. FAST-SETTING TROWELABLE UNDERLAYMENT SYSTEM:
   a. "QUICKCEM TOP 102" BY MAPEI CORPORATION; 800-42-MAPEI.
   b. "SD-P" FAST-SETTING UNDERLAYMENT, BY ARDEX, INC.; 412-264-4240.
   c. "EUCO-SPEED" BY EUCLID CHEMICAL COMPANY; 800-321-7628.
3. ACCESSORIES: FURNISH PRIMERS, PATCHING COMPOUNDS, AND SAND FILLERS AS RECOMMENDED BY THE UNDERLAYMENT MANUFACTURER FOR THE CONDITIONS OF THE PROJECT.

C. MIXING: THOROUGHLY MIX UNDERLAYMENT MATERIALS FOR EACH TYPE OF PRODUCT IN PROPER PROPORTIONS TO ACHIEVE SMOOTH HOMOGENEOUS MIX, FREE OF LUMPS.

D. WITH THE EXCEPTION OF AREAS WHERE LEVELING CAN BE ACCOMPLISHED BY USE OF LATEX UNDERLAYMENT, AS SPECIFIED IN OTHER SECTIONS, INSTALL CEMENTITIOUS UNDERLAYMENT TO CONCRETE SLABS AS INDICATED ON THE DRAWINGS, AND AS NECESSARY TO LEVEL SLABS OR BRING SUBSTRATES TO PROPER ELEVATION.

E CONCRETE DELIVERY BY LANDLORD

1. CONCRETE FLOOR SLABS SHALL BE CONSTRUCTED TO A SURFACE PLANE TOLERANCE OF 1/8" OF ELEVATION VARIATION IN 10' OF HORIZONTAL DIMENSION IN ANY DIRECTION. CONCRETE SHALL BE UNIFORM IN COLOR, FREE FROM ALL STAINS, MARRING, OR VISIBLE DEFECTS, WITHOUT THE NEED FOR ANY PATCHING, TOPPING, LEVELING, OR GRINDING. IT IS THE TENANT'S SPECIFIC INTENT TO PROVIDE A POLISHED EXISTING CONCRETE SLAB AS A FINISHED FLOOR; THEREFORE, ANY IMPERFECTIONS OUTLINED ABOVE WILL BE CORRECTED BY THE TENANT'S CONTRACTOR AT LANDLORD'S EXPENSE.

F. CONCRETE FLOORING PREP

1. POST DEMOLITION, TENANT GC PROVIDE 40 GRIT DIAMOND POLISHING ON AN HTC 800 TO ESTABLISH APPROPRIATE FLOORING SURFACE ON ALL FLOOR AREAS TO RECEIVE FC-4 AND FC-5 FINISH. TENANT GC TO COORDINATE WITH NIKE PROJECT MANAGER TO VERIFY CONCRETE SLAB CONDITION POST 40 GRIT POLISH. NIKE PROJECT MANAGER TO EVALUATE AND DETERMINE IF STAIN/POLISH OR EPOXY FLOORING ALTERNATE SHOULD BE INSTALLED.

E. CONCRETE MOISTURE TESTING

1. TENANT G.C. TO PROVIDE MOISTURE TESTING OF INTERIOR SLAB WHERE EPOXY, CARPETING, VINYL AND REGRIND ARE TO BE INSTALLED. TESTING TO BE ACCORDING TO ASTM TEST METHOD F 1869 (CALCIUM CHLORIDE TEST).
2. TESTING SHOULD BE DONE AFTER BUILDING IS FULLY ENCLOSED AND HVAC HAS BEEN OPERATING FOR AT LEAST ONE WEEK.
3. PROVIDE TEST LOCATIONS AS FOLLOWS; THREE LOCATIONS FOR SLAB AREAS UP TO 1000 SQ FT AND ONE ADDITIONAL LOCATION FOR EACH ADDITIONAL 1000 SQ FT OR FRACTION THEREOFF.
4. PROVIDE AT LEAST ONE TEST LOCATION WITHIN 3' OF EACH EXTERIOR WALL.
5. TESTED AREAS SHALL BE 20"X20" MIN, CLEANED AND EXPOSED 24" HRS IN ADVANCE OF TESTING AND FREE OF ALL FOREIGN SUBSTANCES, ALL RESIDUAL ADHESIVES, CURING COMPOUNDS, SEALERS, PAINTS, FLOOR COVERINGS ETC.
6. TEMPERATURE AND HUMIDITY LEVELS SHOULD BE AS EXPECTED DURING NORMAL USE OR AT MIN BETWEEN 65°-85° F AND 45%-55% RELATIVE HUMIDITY.
7. TENANT G.C. TO VERIFY TEST RESULTS WITH ALL FLOORING MANUFACTURERS SPECIFICATIONS. CONSULT MANUFACTURER AND OWNER WHEN RESULTS ARE IN EXCESS OF SPECIFIED LIMITS FOR SLAB MOISTURE LEVELS.
8. PROVIDE DOCUMENTATION OF MOISTURE TEST RESULTS TO NIKE AS PART OF CLOSE OUT DOCUMENTS.

SECTION 033510 - POLISHED CONCRETE FLOOR FINISH

PART 1 - GENERAL

1.1 SUMMARY

A. SECTION INCLUDES: THIS SECTION SPECIFIES POLISHED CONCRETE FOR NEW CONSTRUCTION, AS WELL AS EXISTING FLOOR REHABILITATION.

1.2 SYSTEM DESCRIPTION

A. PERFORMANCE REQUIREMENTS: PROVIDE POLISHED FLOORING THAT HAS BEEN SELECTED, MANUFACTURED AND INSTALLED TO ACHIEVE THE FOLLOWING:

1. ABRASION RESISTANCE: ASTM C779, METHOD A, HIGH RESISTANCE, NO MORE THAN 0.008 INCH (0.20 MM) WEAR IN 30 MINUTES ON SOUND CONCRETE SPECIFIED TO MEET ACI 302.1R
2. REFLECTIVITY: INCREASE OF 35% AS DETERMINED BY STANDARD GLOSS METER.
3. WATERPROOF PROPERTIES: RILEM TEST METHOD 11.4, 70% OR GREATER REDUCTION IN ABSORPTION.
4. HIGH TRACTION RATING: NFSI 101-A, NON-SLIP PROPERTIES.

B. DESIGN REQUIREMENTS:

1. HARDENED CONCRETE PROPERTIES:
   a. MINIMUM CONCRETE COMPRESSIVE STRENGTH: 3500 PSI (24 MPA).
   b. NORMAL WEIGHT CONCRETE: NO LIGHTWEIGHT AGGREGATE.
   c. NON-AIR ENTRAINED.

1.3 LEED SUBMITTALS

A. SUBMIT ALL REQUIRED LEED DOCUMENTATION FOR MANDATORY AND DESIRABLE CREDITS NOTED IN PARAGRAPH 1.3 PER THE SUBMITTAL REQUIREMENTS, OUTLINED IN SECTION 01352.

RELATED LEED® CREDITS

BUILDING PRODUCT DISCLOSURE AND OPTIMIZATION - SOURCING OF RAW MATERIALS - OPTION 2

LOW EMITTING MATERIALS

PART 2 - PRODUCTS

2.1 MANUFACTURERS

A. ENSURE MANUFACTURER HAS MINIMUM 5 YEARS EXPERIENCE IN MANUFACTURING COMPONENTS SIMILAR TO OR EXCEEDING REQUIREMENTS OF PROJECT.

2.2 POLISHED CONCRETE FINISHING PRODUCTS

A. MANUFACTURERS:

1. AMERIPOLISH PROGUARD STAINSHIELD, SUPPLIER: JOBSIGHT SUPPLY, CONTACT: RYAN MCCREERY, TELEPHONE: (800) 874-7415
2. AMERIPOLISH MIDNIGHT BLACK DYE, SUPPLIER: JOBSIGHT SUPPLY, CONTACT: RYAN MCCREERY, TELEPHONE: (800) 874-7415
3. LYTHIC DENSIFIER, CONTACT: BRAD SLEEPER, TELEPHONE: (360) 571-5760.

PART 3 - EXECUTION

3.1 MANUFACTURERS INSTRUCTIONS

A. COMPLIANCE: COMPLY WITH MANUFACTURER'S WRITTEN DATA, INCLUDING PRODUCT TECHNICAL BULLETINS, PRODUCT CATALOG INSTALLATION INSTRUCTIONS, PRODUCT CARTON INSTALLATION INSTRUCTIONS AND L & M CONSTRUCTION CHEMICALS, INC., SPEC-DATA SHEETS.

B. USE ONLY L & M CERTIFIED FGS/PERMASHINE INSTALLERS. INSTALLER MUST BE ABLE TO PROVIDE A LETTER FROM L&M SHOWING THEM TO BE IN GOOD STANDING AT TIME OF INSTALLATION. REQUEST LIST OF APPROVED INSTALLERS FROM NIKE INC.

3.2 PREPARATION

A. ENSURE SURFACES ARE CLEAN AND FREE OF DIRT AND OTHER FOREIGN MATTER HARMFUL TO PERFORMANCE OF CONCRETE FINISHING MATERIALS.

B. EXAMINE SURFACE TO DETERMINE SOUNDNESS OF CONCRETE FOR POLISHING.

C. IF COMPLETE OVERLAY IS REQUIRED IN ORDER TO OVERCOME SURFACE QUALITY ISSUES, CONTACT L&M CONSTRUCTION CHEMICALS FOR INSTRUCTIONS ON INSTALLING DURAPATCH INDUSTRIAL AS A TOPPING.

D. GENERAL CONTRACTOR TO REMOVE SURFACE CONTAMINATION.

3.3 INSTALLATION

A. FLOOR SURFACE POLISHING AND TREATMENT:

1. PROVIDE POLISHED CONCRETE FLOOR TREATMENT IN ENTIRETY OF SLAB INDICATED BY DRAWINGS. PROVIDE CONSISTENT FINISH IN ALL CONTIGUOUS AREAS.
2. APPLY FLOOR FINISH PRIOR TO INSTALLATION OF FIXTURES AND ACCESSORIES.
3. DIAMOND POLISH CONCRETE FLOOR SURFACES WITH POWER DISC MACHINE RECOMMENDED BY FLOOR FINISH MANUFACTURER. SEQUENCE WITH COARSE TO FINE GRIT USING DRY METHOD.
   a. COMPLY WITH MANUFACTURER'S RECOMMENDED POLISHING GRITS FOR EACH SEQUENCE TO ACHIEVE DESIRED FINISH LEVEL. LEVEL OF SHEEN SHALL MATCH THAT OF APPROVED MOCK-UP.
   b. EXPOSE AGGREGATE IN CONCRETE SURFACE ONLY AS DETERMINED BY APPROVED MOCK-UP.
   c. ALL CONCRETE SURFACES SHALL BE AS UNIFORM IN APPEARANCE.
4. DYED AND POLISHED CONCRETE (**OPTIONAL**):
   a. LOCATE DEMARCATION LINE BETWEEN DYED SURFACES AND OTHER FINISHES. TAPE AND PROTECT ADJACENT FINISHES PRIOR TO DYEING.
   b. POLISH CONCRETE TO 400 GRIT RESIN LEVEL FOR SOLVENT-BASED DYE PRIOR TO APPLICATION.
   c. APPLY DISSOLVED DYES TO POLISHED CONCRETE SURFACE PER MANUFACTURER RECOMMENDATIONS.
   d. APPLY TWO APPLICATIONS OF DYE, ALLOWING DYE TO DRY BETWEEN APPLICATIONS.
   e. REMOVE DYE RESIDUE WITH WATER AND NON-ABRASIVE PAD OR BRUSH. THOROUGHLY CLEAN PRIOR TO APPLICATION OF FGS HARDENER PLUS. (IF APPLYING DYE, THEN INSTALL FIRST APPLICATION FOLLOWING DYE APPLICATION, AND PRIOR TO FINAL POLISHING STAGES.
5. APPLY FGS HARDENER PLUS, HARDENER, DENSIFIER AS FOLLOWS:
   a. FIRST COAT AT 250 FT2/GAL (6.25 M2/L).
   b. SECOND COAT AT 350 FT2/GAL (8.75 M2/L).
   c. FOLLOW MANUFACTURER'S RECOMMENDATIONS FOR DRYING TIME BETWEEN SUCCESSIVE COATS.
6. REMOVE DEFECTS AND REPOLISH DEFECTIVE AREAS.
7. FINISH EDGES OF FLOOR FINISH ADJOINING OTHER MATERIALS IN A CLEAN AND SHARP MANNER.

3.4 FINAL CLEANING

A. DO CLEANUP IN ACCORDANCE WITH SECTION 01741 - CLEANING AND WASTE MANAGEMENT.

B. MECHANICALLY SCRUB TREATED FLOORS FOR SEVEN DAYS WITH SOFT TO MEDIUM PADS WITH APPROVED CLEANING SOLUTION TO ENHANCE SHINE. TO BE DONE BY GENERAL CONTRACTOR OR GENERAL CONTRACTOR'S SUBCONTRACT CLEANING CONTRACTOR.

C. UPON COMPLETION, GENERAL CONTRACTOR MUST REMOVE SURPLUS AND EXCESS MATERIALS, RUBBISH, TOOLS AND EQUIPMENT.

Architect:
brr
ARCHITECT OF RECORD:
BRR ARCHITECTURE, INC
8131 METCALF AVE
SUITE 300
OVERLAND PARK, KS 66204
www.brrarch.com
TEL: 913-262-9095
FAX: 913-262-9044

COPYRIGHT NOTICE
This drawing was prepared for use on a specific site contemporaneously with its issue date and it is not suitable for use on a different project site or at a later time. Use of this drawing for reference or example on another project requires the services of properly licensed architects and engineers. Reproduction of this drawing for reuse on another project is not authorized and may be contrary to the law.

Engineer:

Project Owner:
NIKE, Inc.
One Bowerman Drive
Beaverton, OR 97005
(503) 671-6453
www.nike.com

Project Address:
NIKE FACTORY STORE
WATERFORD LAKES
SHOPPING CENTER
449 N. ALAFAYA TRAIL
ORLANDO, FL 32828
TEMPLATE ISSUE DATE: 11/28/2018

Fixture Package: UNITE

Stamp: NOT FOR CONSTRUCTION

Issued For: PERMIT/BID

Issue Date: 11/06/2020

Revisions:

NO.	REASON	DATE

PROJECT MANAGER: KH
CHECKED BY:
DRAWN BY: RAN

Project Number: 62301411

Sheet Title: ARCHITECTURAL SPECIFICATIONS

Sheet Number: AS5.0

SECTION 05400 - COLD-FORMED METAL FRAMING

PART 1 - GENERAL

1.1 SUBMITTALS

A. SUBMIT ALL REQUIRED LEED DOCUMENTATION FOR MANDATORY AND DESIRABLE CREDITS NOTED IN PARAGRAPH 1.5 PER THE SUBMITTAL REQUIREMENTS, OUTLINED IN SECTION 01352.

RELATED LEED® CREDIT

BUILDING PRODUCT DISCLOSURE AND OPTIMIZATION - SOURCING OF RAW MATERIALS - OPTION 2

BUILDING PRODUCT DISCLOSURE AND OPTIMIZATION

BUILDING PRODUCT DISCLOSURE AND OPTIMIZATION

LOW EMITTING MATERIALS

PART 2 - MATERIALS

2.1 STEEL FRAMING

A. C-SHAPED, GALVANIZED, STANDARD STEEL STUDS AND JOISTS OF SIZE, SHAPE, AND GAUGE AS RECOMMENDED BY MANUFACTURER. INCLUDE MANUFACTURER'S STANDARD ACCESSORIES, INCLUDING RUNNERS, TRACKS, CLIPS, STIFFENERS, AND BRACING.

B. OPEN-WEB, TRIANGULAR SECTION STEEL STUD (DESIGNED TO MINIMIZE THERMAL BRIDGING)

C. PROVIDE PRODUCTS WITH AN AVERAGE RECYCLED CONTENT OF STEEL PRODUCTS SO POST-CONSUMER RECYCLED CONTENT PLUS ONE-HALF OF PRE-CONSUMER RECYCLED CONTENT IS NOT LESS THAN 60 PERCENT.

2.2 RELATED MATERIALS

A. FASTENERS: PROVIDE SCREWS AS RECOMMENDED BY MANUFACTURER.

B. INSULATION: PROVIDE RIGID INSULATION OVER THE FRAMING.

1. INDIVIDUAL FRAMING MEMBER INSULATORS: EXTRUDED POLYSTYRENE CHANNELS ATTACH TO FRAMING MEMBER WITH FRICTION FIT OR PEEL-AND-STICK FOR CORNERS AND TOP AND BOTTOM CHANNELS

2. RIGID FOAM SHEETS APPLIED TO EXTERIOR OF FRAMING ASSEMBLY:

a. EXPANDED POLYSTYRENE FOAM
b. EXTRUDED POLYSTYRENE FOAM
c. POLYISOCYANURATE FOAMS

2.3 PRODUCTS

A. MANUFACTURERS:

1. CEMCO (PREFERRED), TELEPHONE: (800) 775-2362

2. CLARK DIETRICH, TELEPHONE: (513) 870-1100

PART 3 - EXECUTION

3.1 GENERAL

A. PROVIDE METAL STUDS FOR SUPPORT OF GYPSUM BOARD AND ALL OTHER ASSEMBLIES HEREIN SPECIFIED.

B. PROVIDE BACKING PLATES NOT PROVIDED BY OTHER TRADES FOR SUPPORT OF ITEMS ATTACHED TO LIGHTGAGE METAL FRAMING.

C. PROVIDE SUPPLEMENTARY PARTS AND COMPONENTS, SUCH AS INSERTS, CLIPS, BRACING, FASTENERS, ANCHORS AND OTHER MISCELLANEOUS SUPPORTS AND ACCESSORIES REQUIRED FOR A COMPLETE INSTALLATION.

D. FIRE RESISTANCE: WHEREVER A FIRE RESISTANCE CLASSIFICATION IS INDICATED (1-HOUR, 2-HOUR OR SIMILAR DESIGNATION), PROVIDE MATERIALS, ACCESSORIES, AND APPLICATION PROCEDURES WHICH HAVE BEEN LISTED BY UL, AND ARE APPROVED BY THE BUILDING DEPARTMENT.

E. STUDS SUPPORTING GYPSUM BOARD AND SHEATHING SHALL BE A MINIMUM OF 20 GAGE AND HAVE A MINIMUM FLANGE WIDTH OF 1-3/8 INCH. COORDINATE GAUGE SIZE AS PER SPECIFIED IN ARCHITECTURAL DETAILS AND 2/A1.1.

F. STUDS SUPPORTING PLASTER SHALL BE A MINIMUM OF 18 GAGE AND HAVE A MINIMUM FLANGE WIDTH OF 1-3/8 INCH. COORDINATE GAUGE SIZE AS PER SPECIFIED IN ARCHITECTURAL DETAILS.

G. STUDS WITH PARTICULARLY LONG SPANS MAY BE NOTED ON THE DRAWINGS TO BE OF HEAVIER GAGES, COMPLY ACCORDINGLY. COORDINATE GAUGE SIZE AS PER SPECIFIED IN ARCHITECTURAL DETAILS.

H. WHERE TOP RUNNER IS ATTACHED TO OVERHEAD FLOOR, DECK OR STRUCTURAL ELEMENT, PROVIDE FLEX TRACK BY SUPERIOR METAL TRIM PRODUCTS, OR A DOUBLE RUNNER WITH THE LOWER CHANNEL ATTACHED TO THE UPPER ONE WITH SCREWS IN SLOTTED HOLES MAY BE USED.

I. FURRING CHANNELS: 25 GAGE MINIMUM, GALVANIZED, HAT-SHAPED. COORDINATE GAUGE SIZE AS PER SPECIFIED IN ARCHITECTURAL DETAILS.

J. RUNNER CHANNELS AND BRIDGING: 16 GAGE CHANNELS FABRICATED OF COLD-ROLLED STEEL, WITH FLANGES NOT LESS THAN 7/16" WIDE. COORDINATE GAUGE SIZE AS PER SPECIFIED IN ARCHITECTURAL DETAILS.

K. DO NOT ATTACH METAL FRAMING NOR SUSPENSION WIRES TO DUCTS, CONDUITS OR PIPES.

L. CUT FRAMING COMPONENTS SQUARELY FOR A TIGHT FIT AGAINST ABUTTING MEMBERS. ERECT FRAMING PLUMB AND LEVEL TO PROVIDE SOLID BACKING FOR FINISH MATERIALS. INSTALL ALL STEEL STUDS IN A WALL/PARTITION SO THAT THEIR FLANGES POINT IN THE SAME DIRECTION.

M. DO NOT EXCEED A 1/8 INCH IN 10 FEET TOLERANCE FROM TRUE LINES AND LEVELS, NOR 1/8 INCH FROM TRUE POSITION. PERFORM REMEDIAL WORK ON FRAMING AS NECESSARY TO ACHIEVE SPECIFIED TOLERANCES.

N. LAY-OUT ALL PARTITIONS, SOFFITS AND CEILING BREAKS, AND PERMANENTLY MARK ON SLABS AND SOFFITS. LAY-OUT SHALL BE WITHIN 1/8 INCH OF THEIR INDICATED LOCATIONS. NOTIFY THE ARCHITECT IMMEDIATELY IN CASE OF DISCREPANCIES; DO NOT START WORK UNTIL DISCREPANCIES ARE RESOLVED.

O. ALIGN AND SECURELY ANCHOR CEILING AND FLOOR TRACKS TO BUILDING CONSTRUCTION. DO NOT DRIVE FASTENERS CLOSER THAN 2 INCH TO SLAB OR CURB EDGE.

P. PROVIDE DOUBLE STUDS, CLOSER SPACING, AND ADDITIONAL REINFORCEMENT AS DETAILED OR REQUIRED AT DOOR FRAMES, RECESSES FOR EQUIPMENT, ETC. ASSEMBLE CORNERS USING A MINIMUM OF 3 STUDS.

Q. INSTALL STUDS IN SINGLE LENGTH, WITHOUT JOINTS, EXTENDING FROM FLOOR TO UNDERSIDE OF FLOOR OR ROOF STRUCTURE ABOVE, EXCEPT WHERE NOTED ON THE DRAWINGS TO STOP AT SUSPENDED CEILINGS. SPLICING STUDS IS NOT PERMITTED.

R. PROVIDE ADDITIONAL FRAMING, AS REQUIRED, FOR ATTACHMENT OF ELECTRICAL BOXES, FIRE EXTINGUISHER CABINETS AND SIMILAR ITEMS LOCATED IN STUD WALLS.

S. BACKING PLATES NOT PROVIDED WITH FIXTURES AND EQUIPMENT SHALL BE AT LEAST 16 GAGE X 4 INCHES WIDE AND LONG ENOUGH TO SPAN ACROSS 3 STUDS.

SECTION 05500 - MISCELLANEOUS METALS

1.1 SUBMITTALS

SUBMIT ALL REQUIRED LEED DOCUMENTATION FOR MANDATORY AND DESIRABLE CREDITS NOTED IN PARAGRAPH 1.5 PER THE SUBMITTAL REQUIREMENTS, OUTLINED IN SECTION 01352.

RELATED LEED® CREDITS

MATERIALS & RESOURCES - LEED CREDIT - BUILDING PRODUCT DISCLOSURE AND OPTIMIZATION - SOURCING OF RAW MATERIALS - OPTION 2 - LEADERSHIP EXTRACTION PROCESSES

MATERIALS & RESOURCES - LEED CREDIT - BUILDING PRODUCT DISCLOSURE AND OPTIMIZATION

MATERIALS & RESOURCES - LEED CREDIT - BUILDING PRODUCT DISCLOSURE AND OPTIMIZATION

INDOOR ENVIRONMENTAL QUALITY - LEED CREDIT - LOW EMITTING MATERIALS

PART 2 - PRODUCTS

2.1 MATERIALS

A. PROVIDE STEEL SHAPES AND CONNECTIONS AS REQUIRED OR INDICATED ON THE DRAWINGS.

B. PROVIDE MISCELLANEOUS TUBES, CHANNELS, ANGLES, PLATES, BARS, RODS, METAL DECKING AND OTHER SHAPES, NOT SPECIFIED IN OTHER SECTIONS BUT REQUIRED TO COMPLETE THE WORK.

C. REFERENCE STANDARDS: THE APPLICABLE PROVISIONS OF THE FOLLOWING GOVERN THE WORK OF THIS SECTION:

AISC, DESIGN, FABRICATION AND ERECTION OF STRUCTURAL STEEL FOR BUILDINGS.

AISI, SPECIFICATIONS FOR THE DESIGN OF COLD-FORMED STEEL STRUCTURAL MEMBERS.

AWS D1.1, STRUCTURAL WELDING CODE.

D. STEEL PLATES, BARS AND SHEETS: ASTM A36, ASTM A283, GRADE C, ASTM A306, GRADE 65, ASTM A446 OR A526 WITH ZINC COATING CONFORMING TO ASTM A525, DESIGNATION G90, OR ASTM A575.

E. STEEL PIPE: ASTM A53, TYPE E OR S, GRADE A. FY = 35 KSI.

F. STEEL TUBING: ASTM A500, GRADE B. FY = 46.0 KSI.

G. CONCRETE AND MASONRY ANCHORS: SELF-DRILLING OR NON-DRILLING EXPANSION TYPES BY PHILLIPS DRILL CO., INC., RAWLPLUG CO., INC., STAR EXPANSION INDUSTRIES, INC., HILTI OR EQUAL.

H. WELDING ELECTRODES: TYPES RECOMMENDED BY AWS FOR THE METALS TO BE WELDED.

I. PAINT TOUCH-UP FOR GALVANIZED SURFACES: ZINC-RICH PRIMER BY ZRC, TNEMEC OR EQUAL.

J. CUT, REINFORCE, DRILL, PUNCH, THREAD AND TAP MISCELLANEOUS METAL WORK AS REQUIRED TO RECEIVE FINISH HARDWARE AND SIMILAR ITEMS OF WORK.

K. FORM BENT METAL CORNERS TO THE SMALLEST RADIUS POSSIBLE WITHOUT CAUSING GRAIN SEPARATION OR OTHERWISE IMPAIRING THE STRENGTH OF THE MATERIAL.

L. FABRICATE ITEMS IN THE LARGEST SECTIONS PRACTICAL TO MINIMIZE FIELD JOINTING.

M. APPLY A HEAVY COAT OF BITUMINOUS PAINT TO METAL SURFACES IN CONTACT WITH CONCRETE OR MASONRY.

N. WELD SHOP AND FIELD CONNECTIONS CONTINUOUSLY IN ACCORDANCE WITH AWS D1.1, UNLESS BOLTED CONNECTIONS ARE SPECIFICALLY SHOWN.

O. PROVIDE ANCHORAGE DEVICES AND FASTENERS REQUIRED FOR ATTACHING MISCELLANEOUS METAL WORK TO IN-PLACE CONSTRUCTION, INCLUDING THREADED FASTENERS FOR CONCRETE AND MASONRY INSERTS, TOGGLE BOLTS, THROUGH-BOLTS, LAG BOLTS, WOOD SCREWS AND OTHER CONNECTORS REQUIRED.

P. SET ITEMS ACCURATELY IN THEIR PROPER LOCATION, ALIGNMENT AND ELEVATION. PLUMB, LEVEL, TRUE AND FREE OF RACK AS MEASURED FROM ESTABLISHED LINES AND LEVELS.

Q. FIT EXPOSED CONNECTIONS ACCURATELY TO FORM FLUSH, HAIRLINE JOINTS. WELD CONNECTIONS WHICH ARE NOT TO BE LEFT AS EXPOSED JOINTS, BUT CANNOT BE SHOP WELDED BECAUSE OF SHIPPING SIZE LIMITATIONS. GRIND EXPOSED JOINTS SMOOTH AND FLUSH WITH PARENT METAL.

SECTION 06100 - ROUGH CARPENTRY

PART 1 GENERAL

1.1 SUBMITTALS

A. SUBMIT ALL REQUIRED LEED DOCUMENTATION FOR MANDATORY AND DESIRABLE CREDITS NOTED IN PARAGRAPH 1.5 PER THE SUBMITTAL REQUIREMENTS, OUTLINED IN SECTION 01352.

RELATED LEED® CREDITS

BUILDING PRODUCT DISCLOSURE AND OPTIMIZATION - SOURCING OF RAW MATERIALS - ' OPTION 2 - LEADERSHIP EXTRACTION PROCESSES

BUILDING PRODUCT DISCLOSURE AND OPTIMIZATION

BUILDING PRODUCT DISCLOSURE AND OPTIMIZATION - SOURCING OF RAW MATERIALS - OPTION 2 - LEADERSHIP EXTRACTION PROCESSES

LOW EMITTING MATERIALS

B. SUBMIT INVOICES AND DOCUMENTATION FROM MANUFACTURER OF THE AMOUNTS OF POST-CONSUMER AND POST-INDUSTRIAL RECYCLED CONTENT BY WEIGHT FOR PRODUCTS WITH SPECIFIED RECYCLED CONTENT.

1.2 DELIVERY, STORAGE, AND HANDLING

A. PROTECT FRAMING LUMBER, SHEATHING, AND ENGINEERED WOOD PRODUCTS FROM EXCESSIVE HUMIDITY AND MOISTURE. STORE WOOD I-BEAMS AND GLUE-LAMINATED BEAMS AND JOISTS ON EDGE.

SECTION 06100 - ROUGH CARPENTRY - CONTINUED

PART 2 - PRODUCTS

2.1 MATERIALS

A. CERTIFIED DIMENSIONAL LUMBER:

B. SALVAGED LUMBER:

C. ENGINEERED WOOD PRODUCTS:

1. GLUE-LAMINATED DIMENSIONAL LUMBER:

a. LAMINATED-STRAND LUMBER FOR BEAMS, POSTS, STUDS
b. LAMINATED-VENEER LUMBER FOR BEAMS, JOISTS
c. GLUE-LAMINATED BEAMS: FSC-CERTIFIED BY SPECIAL ORDER

2. WOOD I-BEAMS: JOISTS, RAFTERS; AVAILABLE FSC-CERTIFIED FROM CERTAIN MANUFACTURERS BY SPECIAL ORDER

3. WOOD TRUSSES:

a. MANUFACTURED, GANG-NAILED TRUSSES: TWO-BY DIMENSIONAL LUMBER CHORDS AND WEBS WITH GALVANIZED METAL NAILING PLATES; FSC-CERTIFIED LUMBER

4. ALL ENGINEERED WOOD PRODUCTS TO BE CARB COMPLIANT, NAF OR ULEF

D. SHEET MATERIALS:

1. ORIENTED-STRAND BOARD (OSB): FSC-CERTIFIED

2. PLYWOOD: FSC-CERTIFIED

3. MEDIUM-DENSITY FIBERBOARD: CARB COMPLIANT, NAF OR ULEF

4. PARTICLEBOARD:

A. FSC-CERTIFIED PARTICLEBOARD

6. STRUCTURAL INSULATED PANELS (SIPS): OSB SKIN BONDED TO EXPANDED POLYSTYRENE, POLYURETHANE, OR AGRIFIBER CORE

7. RADIANT BARRIER SHEET MATERIAL: FOIL-FACED PLYWOOD, OSB, OR RECYCLED PAPER

8. COMPRESSED-STRAW PANELS: FOR INTERIOR WALL PARTITIONS AND ROOM DIVIDERS; NONLOAD-BEARING; FACED WITH PAPER, FOIL

9. GREENGUARD-CERTIFIED PLASTIC LAMINATE

10. ALL SHEET MATERIALS TO BE CARB COMPLIANT, NAF OR ULEF

E. ROT- AND INSECT-RESISTANT WOOD:

1. UNTREATED, NATURALLY ROT-RESISTANT, HEART WOOD\EMDASH INCLUDING, BUT NOT LIMITED TO, REDWOOD, WESTERN RED CEDAR, BALD CYPRESS, LONGLEAF YELLOW PINE, ELM, BLACK LOCUST, AMERICAN CHESTNUT, AND ANGICO--FROM ONE OF THE FOLLOWING SOURCES:

a. FSC-CERTIFIED, CARB COMPLIANT, NAF OR ULEF
b. SALVAGED

2. PRESSURE-TREATED WOOD: MINIMIZE CUTTING, AVOID BREATHING SAWDUST. [AVAILABLE AS FSC-CERTIFIED LUMBER BY SPECIAL ORDER]

a. ACQ - AMMONIACAL COPPER QUARTERNARY COMPOUND: PRESSURE-INJECTED WOOD THAT DOES NOT USE ARSENIC OR CHROMIUM [NOT CLASSIFIED AS HAZARDOUS WASTE BY EPA]

1. ABOVE-GROUND: 0.25 LBS. RETENTION/CU. FT.
2. GROUND CONTACT: 0.40 LBS. RETENTION/CU. FT.
3. WOOD FOUNDATIONS: 0.60 LBS. RETENTION/CU. FT.
4. PILINGS: 0.80 TO 1.0 LBS. RETENTION/CU. FT.

b. BORATE: FRAMING LUMBER AND PLYWOOD PRESSURE-TREATED WITH SODIUM BORATE AND OSB SHEATHING PRODUCTS WITH INTEGRAL ZINC BORATE RECENTLY INTRODUCED; APPROPRIATE FOR INTERIOR APPLICATIONS--DO NOT USE WHERE EXPOSED TO WEATHER OR GROUND CONTACT.
c. SODIUM SILICATE WOOD MINERALIZATION PROCESS; FRAMING LUMBER AND PLYWOOD PRESSURE- AND HEAT-TREATED WITH SODIUM SILICATE RECENTLY INTRODUCED; APPROPRIATE FOR INTERIOR AND EXTERIOR APPLICATIONS, INCLUDING GROUND CONTACT; NOT YET LISTED WITH THE ICC.

2.2 RELATED MATERIALS

SUBMIT ALL REQUIRED LEED DOCUMENTATION FOR MANDATORY AND DESIRABLE CREDITS NOTED IN PARAGRAPH 1.5 PER THE SUBMITTAL REQUIREMENTS, OUTLINED IN SECTION 01352.

A. FASTENERS

B. CONSTRUCTION ADHESIVES

2.3 PRODUCTS

A. MANUFACTURERS:

1. MDF:
a. SIERRAPINE COMPOSITE SOLUTIONS, "ARREIS - FSC CERTIFIED (MIXED CREDIT"), TELEPHONE: (800) 676-3339, WEBSITE: WWW.SIERRAPINE.COM
b. GEORGIA PACIFIC - ULTRASTOCK FREE MDF

2. PLYWOOD: HOOVER - PYROGUARD

3. PARTICLEBOARD:
a. TAFIPAN PARTICLEBOARD
b. UNIBOARD NUGREEN 2 PARTICLEBOARD
c. ROSEBURG & VT INDUSTRIES - SKYBLEND COUNTERTOPS PARTICLEBOARD CORES

4. TREATED LUMBER: HOOVER TREATED WOOD PRODUCTS, PYROGUARD FIRE RETARDANT TREATED LUMBER

SECTION 06200 - FINISH CARPENTRY AND MILLWORK

GUIDANCE FOR DESIGNERS AND SPECIFIERS, WITH SUGGESTED LANGUAGE TO BE MODIFIED AND INCORPORATED INTO PROJECT SPECIFICATIONS.

PART 1 - GENERAL

1.1 SUMMARY
A. PROPRIETARY VENDOR IS RTC FOR FIXTURES. SEE SHEET TS.1 FOR CONTACT INFORMATION.

1.2 SUBMITTALS

A. SUBMIT ALL REQUIRED LEED DOCUMENTATION FOR MANDATORY AND DESIRABLE CREDITS NOTED IN PARAGRAPH 1.5 PER THE SUBMITTAL REQUIREMENTS, OUTLINED IN SECTION 01352.

RELATED LEED® CREDITS

BUILDING PRODUCT DISCLOSURE AND OPTIMIZATION - SOURCING OF RAW MATERIALS - OPTION 2 - LEADERSHIP EXTRACTION PROCESSES

BUILDING PRODUCT DISCLOSURE AND OPTIMIZATION

LOW EMITTING MATERIALS

PART 2 - PRODUCTS

2.1 INTERIOR MILLWORK
A. BASE, CASING, TRIM, INTERIOR RAIL AND WALL CAPS, AND MISCELLANEOUS MILLWORK:

1. MATERIALS SUITABLE FOR CLEAR FINISH:

a. FSC-CERTIFIED, SOLID DIMENSIONAL LUMBER

b. SALVAGED, REMILLED LUMBER

c. GREENGUARD GOLD CERTIFIED PLASTIC LAMINATE
1. NEVAMAR HIGH PRESSURE LAMINATE (PREFERRED)
2. WILSONART PLASTIC LAMINATE W/FSC BACKING (ALTERNATE)

2. MATERIALS SUITABLE FOR OPAQUE FINISH:

a. MEDIUM-DENSITY FIBERBOARD (MDF): CARB COMPLIANT, NAF OR ULEF, PRE-PRIMED

b. RECYCLED PAPER: SLURRIED WASTE PAPER FORMED INTO MOLDINGS, BLOCKS, OR PANELS

c. AGRIFIBER PARTICLEBOARD

d. WOOD PARTICLEBOARD PRODUCED WITH PMDI OR PHENOL-FORMALDEHYDE (PF) BINDER

SECTION 06200 - FINISH CARPENTRY AND MILLWORK (CON'T)

B. PANELING:

1. PLYWOOD:

a. HOOVER TREATED WOOD PRODUCTS - PYROGUARD FIRE RETARDANT TREATED LUMBER
b. FSC-CERTIFIED PLYWOOD
c. FSC-CERTIFIED FACE VENEERS OVER CARB COMPLIANT, NAF OR ULEF MDF OR AGRIFIBER CORE

2.2 CASEWORK

ALL CASEWORK TO BE CARB COMPLIANT, NAF OR ULEF AND COMPOSED OF FSC-CERTIFIED WOOD PRODUCTS.

A. CARCASSES AND SUBSTRATES:

1. SALVAGED CARCASSES AND CABINETS:

a. SEAL INTERIOR SURFACES.

2. MEDIUM-DENSITY FIBERBOARD

3. STRAW PARTICLEBOARD

4. FSC-CERTIFIED PLYWOOD

5. SOLID DIMENSIONAL LUMBER

6. AGRIFIBER BOARD

7. WOOD PARTICLEBOARD MADE WITH PF RATHER THAN UF BINDERS

B. FACE FRAMES, DOORS, DRAWERS:

1. SALVAGED DOORS AND DRAWERS

2. SOLID DIMENSIONAL LUMBER: FSC-CERTIFIED OR SALVAGED

3. VENEERS

2.3 MISCELLANEOUS MATERIALS

A. ADHESIVES:

1. INTERIOR WOODWORK AND MILLWORK: LOW-VOC, FS MMM-A-125C, TYPE II, WATER- AND MOLD-RESISTANT. USE ASTM D3110, DRY-USE TYPE FOR LAMINATED AND FINGER-JOINTED MEMBERS, CERTIFIED IN ACCORDANCE WITH ASTM C557 AND COMPLYING WITH REQUIRED VOC REGULATIONS.

A. WATER-BASED CONTACT CEMENT

B. WATER-BASED CONSTRUCTION ADHESIVE

2.4 PRODUCTS

A. MANUFACTURERS:

1. MDF: SIERRAPINE COMPOSITE SOLUTIONS, "ARREIS - FSC CERTIFIED (MIXED CREDIT"), TELEPHONE: (800) 676-3339, WEBSITE: WWW.SIERRAPINE.COM

2. PLYWOOD: 3/4 ACX 4X8 - FSC MIXED 70% SCS-COC-00006, PLYWOOD AND LUMBER SALES, INC., TELEPHONE: 866-549-9663

DIVISION 07 - THERMAL AND MOISTURE PROTECTION

RELATED LEED® CREDITS

ENERGY & ATMOSPHERE - LEED V4 ID+C - MINIMUM ENERGY EFFICIENCY PERFORMANCE

MATERIALS & RESOURCES - LEED V4 ID+C - MATERIALS AND RESOURCES LEED V4 ID+C CREDIT - CONSTRUCTION WASTE MANAGEMENT

MATERIALS & RESOURCES - LEED V4 ID+C CREDIT- BUILDING PRODUCT DISCLOSURE AND OPTIMIZATION- SOURCING OF RAW MATERIALS -OPTION 2– LEADERSHIP EXTRACTION PROCESSES

MATERIALS & RESOURCES - LEED V4 ID+C CREDIT – BUILDING PRODUCT DISCLOSURE AND OPTIMIZATION

INDOOR ENVIRONMENTAL QUALITY LEED V4 ID+C CREDIT- LOW-EMITTING MATERIALS

SECTION 072100 - THERMAL INSULATION

A. GENERAL: PROVIDE THERMAL INSULATION WITH ACCESSORIES AS REQUIRED FOR COMPLETE INSTALLATION.
1. INSULATION INTEGRAL WITH ROOFING REPAIRS IS PROVIDED WITH ROOFING, AND ACOUSTICAL INSULATION IS PROVIDED WITH GYPSUM BOARD ASSEMBLIES.

B. THERMAL BATT INSULATION: FOIL-FACED VAPOR RETARDER FACED, VAPOR RETARDER TOWARD INSIDE.
1. THICKNESS/R-VALUE: AS INDICATED ON THE DRAWINGS

C. ACCESSORIES: PROVIDE TAPE OR PENETRATION ANCHORS WHERE REQUIRED TO ENSURE PERMANENT INSTALLATION.

D. INSTALLATION: COMPLY WITH MANUFACTURER RECOMMENDATIONS.

SECTION 072400 - EXTERIOR INSULATION AND FINISH SYSTEM (EIFS)

PART 1 GENERAL

1.1 SECTION INCLUDES

A. MATERIALS AND INSTALLATION OF EIFS

1.2 RELATED SECTIONS

A. SECTION 061600: SHEATHING
B. SECTION 072100: THERMAL INSULATION
C. SECTION 075900: ROOF REPAIRS (IF APPLICABLE)
D. SECTION 076000: FLASHING AND SHEET METAL
E. SECTION 079200: JOINT SEALANTS
F. SECTION 084113: ALUMINUM-FRAMED ENTRANCES AND STOREFRONTS

1.3 SUBMITTALS:

A. SAMPLES:

1. G.C. SHALL PROVIDE ONE 12" X 12" SAMPLE OF THE PROPER FINISH COATING, TEXTURE AND COLOR, SHALL BE PREPARED USING THE SAME TOOL AND TECHNIQUE AS REQUIRED BY THE JOB.
2. ONE SAMPLE SHALL REMAIN AT THE JOBSITE FOR COMPARISON OF TEXTURE AND COLOR.

PART 2 - PRODUCTS

2.1 MANUFACTURERS

A. PROVIDE EIFS SYSTEM AND ACCESSORIES FROM SINGLE SOURCE MANUFACTURER OR APPROVED SUPPLIER.

2.2 SURFACE PREPARATION

A. MANUFACTURER APPROVED PRODUCT FOR SURFACE PREPARATION, COMPATIBLE WITH SYSTEM COMPONENTS.

2.3 WATERPROOFING MEMBRANE

A. ACRYLIC POLYMER ELASTOMERIC WATERPROOFING MEMBRANE

2.4 ADHESIVE

A. UNIBASE ADHESIVE: ACRYLIC POLYMER CEMENT MODIFIER MIXED AT JOBSITE WITH PORTLAND CEMENT, USED TO ADHERE THE EPS TO APPROVED SUBSTRATE.

2.5 INSULATION BOARD

A. NOMINAL 1.0LB./CUBIC FOOT EXPANDED POLYSTYRENE (EPS) INSULATION BOARD COMPLYING WITH ASTM C 578 TYPE 1 REQUIREMENTS AND EIMA GUIDELINE SPECIFICATION FOR EXPANDED POLYSTYRENE INSULATION BOARD. SUCH INSULATION BOARD SHALL BE PRODUCED FOR MANUFACTURER'S APPROVAL. MINIMUM THICKNESS OF EPS SHALL BE 3/4" AFTER ALL RASPING IS COMPLETE; INCLUDING ANY POINT HERE IT HAS BEEN ROUTERED OR GROOVED. MAXIMUM THICKNESS OF EPS SHALL BE 1" U.O.N.

2.6 BASE COAT

A. AN ACRYLIC POLYMER CEMENT MODIFIER WITH A HIGH RESISTANCE TO MOISTURE, AN ELEMENT OF THE BASE COAT MIXTURE.

2.7 REINFORCING MESHES

A. REINFORCING MESH (ADHESIVE-BACKED DETAIL); USED WITH THE EIFS SYSTEM TO TAPE SHEATHING JOINTS, AS AN ELEMENT OF THE SECONDARY WATER-RESISTIVE BARRIER.
B. REINFORCING MESH (DETAIL): TREATED GLASS-FIBER REINFORCING MESH IN THE LAMINA USED IN DETAILED WORK AND FOR BACKWRAP AT ALL SYSTEM TERMINATIONS TO STRENGTHEN THE SURFACE OF THE EPS INSULATION BOARD. 2.0 OZ./SY
C. REINFORCING MESH (STANDARD): GLASS-FIBER REINFORCING MESH IN THE LAMINA USED TO STRENGTHEN THE SURFACE OF THE EPS INSULATION BOARD. 4.4 OZ./SY
D. REINFORCING MESH (REINFORCED): TREATED GLASS-FIBER REINFORCING MESH IN THE LAMINA USED IN HIGH-TRAFFIC AREAS TO STRENGTHEN THE SURFACE OF THE EPS INSULATION BOARD. 10.6 OZ./SY
E. REINFORCING MESH (HEAVY DUTY): TREATED GLASS-FIBER REINFORCING MESH IN THE LAMINA USED IN HIGH-TRAFFIC AREAS TO STRENGTHEN THE SURFACE OF THE EPS INSULATION BOARD. 14. OZ./SY
F. REINFORCING MESH (SUPER HEAVY DUTY): TREATED GLASS-FIBER REINFORCING MESH IN THE LAMINA USED IN HIGH-TRAFFIC AREAS TO STRENGTHEN THE SURFACE OF THE EPS INSULATION BOARD. 20.0 OZ./SY

2.8 PRIMER

A. VAPOR PERMEABLE, ACRYLIC PRIMER

Architect:

brr

ARCHITECT OF RECORD:
BRR ARCHITECTURE, INC
8131 METCALF AVE
SUITE 300
OVERLAND PARK, KS 66204

www.brrarch.com

TEL: 913-262-9095
FAX: 913-262-9044

COPYRIGHT NOTICE

This drawing was prepared for use on a specific site contemporaneously with its issue date and it is not suitable for use on a different project site or at a later time. Use of this drawing on another project or on another project requires the services of properly licensed architects and engineers. Reproduction of this drawing for reuse on another project is not authorized and may be contrary to the law.

Engineer:

Project Owner:

NIKE, Inc.
One Bowerman Drive
Beaverton, OR 97005
(503) 671-6453
www.nike.com

Project Address:

NIKE FACTORY STORE
WATERFORD LAKES
SHOPPING CENTER
449 N. ALAFAYA TRAIL
ORLANDO, FL 32828
TEMPLATE ISSUE DATE: 11/28/2018

Fixture Package:

UNITE

Stamp:

NOT FOR CONSTRUCTION

Issued For:

PERMIT/BID

Issue Date:

11/06/2020

Revisions:

NO.	REASON	DATE

PROJECT MANAGER: KH
CHECKED BY:
DRAWN BY: RAN

Project Number:

62301411

Sheet Title:

ARCHITECTURAL SPECIFICATIONS

Sheet Number:

AS6.0

SECTION 072400 - EXTERIOR INSULATION AND FINISH SYSTEMS (EIFS) - CONTINUED

2.9 FINISH COAT

A. QUARRY: FACTORY-MIXED, ACRYLIC POLYMER BASED FINISH COATING CONTAINING INTEGRAL COLOR. COLOR: "BLACK", TEXTURE: SMOOTH.

2.10 PENETRATING SEALER

A. CLEAR, ACRYLIC SEALER

2.11 JOB MIXED INGREDIENTS

A. WATER: CLEAN AND CLEAR, FREE OF FOREIGN MATTER, AND POTABLE.
B. PORTLAND CEMENT: ASTM C 150 TYPE I OR II PORTLAND CEMENT WITH FINE POWDER CONSISTENCY AND FREE OF LUMPS.

2.12 MIXING

A. MIX IN COMPLIANCE WITH MANUFACTURER'S PUBLISHED INSTRUCTIONS.
B. MIX ONLY AS MUCH MATERIAL AS CAN READILY BE USED.
C. DO NOT USE ANTI-FREEZE COMPOUNDS OR OTHER ADDITIVES.

PART 3 - EXECUTION

3.1 ACCEPTABLE INSTALLERS

A. PREQUALIFY UNDER QUALITY ASSURANCE REQUIREMENTS OF THIS SPECIFICATION (SECTION 1.05.B).

3.2 EXAMINATION

A. VERIFY THE SUBSTRATE IS APPROPRIATE FOR USE WITH THE EIFS SYSTEM.
B. INSPECT SUBSTRATE SURFACES FOR:
 1. CONTAMINATION: ALGAE, CHALKINESS, DIRT, DUST, EFFLORESCENCE, FORM OIL, FUNGUS, GREASE, LAITANCE, MILDEW, OR OTHER FOREIGN SUBSTANCES.
 2. SURFACE ABSORPTION AND CHALKINESS.
 3. CRACKS: MEASURE CRACK WIDTH AND RECORD LOCATION OF CRACKS.
 4. DAMAGE AND DETERIORATION.
 5. MOISTURE CONTENT AND MOISTURE DAMAGE: USE A MOISTURE METER TO DETERMINE IF THE SURFACE IS DRY ENOUGH TO RECEIVE THE EIFS AND RECORD ANY AREAS OF MOISTURE DAMAGE.
 6. COMPLIANCE WITH SPECIFICATION TOLERANCES: RECORD AREAS THAT ARE OUT OF TOLERANCE (GREATER THAN 1/4 INCH IN 8-0 FEET DEVIATION IN PLANE).
C. REPORT DEVIATIONS FROM THE REQUIREMENTS OF PROJECT SPECIFICATIONS OR OTHER CONDITIONS THAT MIGHT ADVERSELY AFFECT THE EIFS INSTALLATION TO THE GENERAL CONTRACTOR. DO NOT START WORK UNTIL DEVIATIONS ARE CORRECTED.

3.3 SURFACE PREPARATION

A. REMOVE SURFACE CONTAMINANTS ON CONCRETE AND CONCRETE MASONRY SURFACES (REFER TO ASTM D 4258 AND D 4261).
B. APPLY CONDITIONER BY SPRAYER OR ROLLER TO CHALKING OR EXCESSIVELY ABSORPTIVE SURFACES.
C. REPLACE WEATHER-DAMAGED SHEATHING AND REPAIR DAMAGED OR CRACKED SURFACES.
D. LEVEL SURFACES TO COMPLY WITH REQUIRED TOLERANCES.

3.4 INSTALLATION: INSTALL IN COMPLIANCE WITH MANUFACTURER'S PUBLISHED INSTRUCTIONS/

3.5 PROTECTION

A. PROVIDE PROTECTION OF INSTALLED MATERIALS FROM WATER INFILTRATION INTO OR BEHIND THEM. PROVIDE PROTECTION OF INSTALLED MATERIALS FROM DUST, DIRT, PRECIPITATION, FREEZING AND CONTINUOUS HIGH HUMIDITY UNTIL THEY ARE FULLY DRY.

3.6 DESIGN REQUIREMENT AND ENERGY EFFICIENCY

A. SUBSTRATE SYSTEMS SHOULD BE DESIGNED TO WITHSTAND APPLICABLE LOADS, INCLUDING LIVE, DEAD, POSITIVE AND NEGATIVE WIND, SEISMIC, ETC. BOND STRENGTH, FASTENER STRENGTH AND CONNECTION STRENGTH SHALL BE ANALYZED AND ENGINEERED, AND APPROPRIATE FACTORS OF SAFETY SHALL BE USED. MAXIMUM DEFLECTION OF SUBSTRATE SYSTEMS SHALL NOT EXCEED 1/240TH OF THE SPAN.

B. DIMENSIONAL TOLERANCES:
 1. STRUCTURAL STEEL FRAMING USED TO SUPPORT THE EIFS SHALL MEET THE REQUIREMENTS OF THE AMERICAN INSTITUTE OF STEEL CONSTRUCTION.
 2. BRICK, MASONRY AND CONCRETE SUBSTRATES AND EXTERIOR GRADE SHEATHING SHALL BE FLAT WITHIN 1/4" DEPTH WITHIN ANY 4' RADIUS.

C. LIGHT GAUGE STEEL FRAMING:
 1. THICKNESS SHALL BE DETERMINED BY LOADS USING ACCEPTED ENGINEERING PRACTICES WITH MINIMUM THICKNESS BEING 20 GAUGE AT MAXIMUM 16" STUD SPACING.

D. ACCEPTABLE SUBSTRATES:
 1. AS DETAILED AND INDICATED ON DRAWINGS.
 2. SHEATHING SHALL BE PROTECTED AT ALL TIMES PRIOR TO INSTALLATION OF THE EIFS SYSTEM TO ENSURE THAT DAMAGE TO THE SHEATHING DOES NOT OCCUR AND THAT THE BOND BETWEEN THE GYPSUM AND ITS FACING HAS NOT OCCUR AND THAT THE BOND BETWEEN THE GYPSUM AND ITS FACING HAS NOT BEEN COMPROMISED.

E. THE MINIMUM SLOPE OF INCLINED SURFACES SHALL BE NOT LESS THAN 6" OF RISE IN 12" OF HORIZONTAL PROJECTION.

F. WIND LOAD: DESIGN FOR MAXIMUM ALLOWABLE SYSTEM DEFLECTION, NORMAL TO THE PLANE OF THE WALL, OF 1/240. DESIGN FOR WIND LOAD IN CONFORMANCE WITH CODE REQUIREMENTS.

G. MOISTURE CONTROL: PREVENT THE ACCUMULATION OF WATER BEHIND THE EIFS SYSTEM, EITHER BY CONDENSATION OF LEAKAGE THROUGH THE WALL CONSTRUCTION, IN THE DESIGN AND DETAILING OF THE WALL ASSEMBLY.
 1. PROVIDE FLASHING TO DIRECT WATER TO THE EXTERIOR WHERE IT IS LIKELY TO PENETRATE COMPONENTS IN THE WALL ASSEMBLY, INCLUDING, ABOVE WINDOW AND DOOR HEADS, BENEATH WINDOW AND DOOR SILLS, AT ROOF/WALL INTERSECTIONS, DECKS, ABUTMENTS OF LOWER WALLS WITH HIGHER WALLS, ABOVE PROJECTING FEATURES, AND AT THE BASE OF THE WALL.
 2. VAPOR DIFFUSION AND CONDENSATION: PERFORM A DEW POINT ANALYSIS OF THE WALL ASSEMBLY TO DETERMINE THE POTENTIAL FOR ACCUMULATION OF MOISTURE IN THE WALL ASSEMBLY AS A RESULT OF WATER VAPOR DIFFUSION AND CONDENSATION. ADJUST INSULATION THICKNESS AND/OR OTHER WALL ASSEMBLY COMPONENTS ACCORDINGLY TO MINIMIZE THE RISK OF CONDENSATION. AVOID THE USE OF VAPOR RETARDERS ON THE INTERIOR SIDE OF THE WALL IN WARM, HUMID CLIMATES.

H. IMPACT RESISTANCE PER 2.06 REINFORCING MESHES; PROVIDE ULTRA-HIGH IMPACT RESISTANCE TO A MIN. HEIGHT OF 6'-0" (1.8 M) ABOVE FINISHED GRADE AT ALL AREAS ACCESSIBLE TO PEDESTRIAN TRAFFIC AND OTHER AREAS EXPOSED TO ABNORMAL STRESS OR IMPACT.

I. JOINTS:
 1. DESIGN MINIMUM 3/4" WIDE EXPANSION JOINTS IN THE EIFS WHERE THEY EXIST IN THE SUBSTRATE OR SUPPORTING CONSTRUCTION, WHERE THE EIFS ADJOINS DISSIMILAR CONSTRUCTION OR MATERIALS, AT CHANGES IN BUILDING HEIGHT, AND AT FLOOR LINES IN MULTI-LEVEL WOOD FRAME CONSTRUCTION.
 2. MINIMUM 1/2" WIDE SEALANT JOINTS AT ALL PENETRATIONS THROUGH THE EIFS (WINDOWS, DOORS, ETC.)
 3. INSTALL BACKER ROD AND SEALANT THAT HAS BEEN EVALUATED IN ACCORDANCE WITH ASTM C 1382, "TEST METHOD FOR DETERMINING TENSILE ADHESION PROPERTIES OF SEALANTS WHEN USED IN EXTERIOR INSULATION AND FINISH SYSTEM (EIFS) JOINTS", AND THAT MEETS MINIMUM 50% ELONGATION AFTER CONDITIONING.
 4. DESIGN JOINTS WITH SECONDARY MOISTURE PROTECTION AND DRAIN JOINTS TO THE EXTERIOR. REFER TO STOREFRONT DETAILS FOR LOCATIONS IF REQUIRED.

J. PROJECTING ARCHITECTURAL FEATURES AND REVEALS: ALL PROJECTING ARCHITECTURAL FEATURES MUST HAVE A MINIMUM 1:2 [27°] SLOPE ALONG THEIR TOP SURFACE.

K. TERMINATIONS
 1. WHERE WINDOW AND DOOR HEADS AND JAMBS AND OTHER ELEMENTS PENETRATE THE SUBSTRATE, A MINIMUM 1/2" WILL BE LEFT BETWEEN THE EIFS AND THAT ELEMENT, IN ORDER TO ACCOMMODATE THE INSTALLATION OF BACKER ROD AND SEALANT.
 2. WINDOWS MUST BE DESIGNED WITH THE PROPER SILL PAN, END GAMES, OR OTHER DESIGN ELEMENTS TO ENSURE THAT ANY WATER PENETRATING THE WINDOW ASSEMBLY IS DIVERTED TO THE EXTERIOR OF THE BUILDING.
 3. THE EIFS SHALL TERMINATE AT LEAST 8" ABOVE GRADE.
 4. AT ROOFLINES, BALCONIES AND OTHER TERMINATIONS, ADEQUATE FLASHING, INCLUDING DIVERTER FLASHING, SHALL BE DESIGNED AN INSTALLED TO PREVENT WATER INFILTRATION INTO THE WALL ASSEMBLY.

L. SEALANTS: SEALANT SHALL BE INSTALLED PER THE SEALANT MANUFACTURER'S SPECIFICATIONS, USING ACCESSORIES AND COMPONENTS APPROVED BY THAT MANUFACTURER. BACKER RODS SHALL BE CLOSED CELL.

M. DETAILS: FOLLOW MANUFACTURER'S LATEST PUBLISHED INFORMATION FOR STANDARD DETAIL TREATMENTS.

3.7 QUALITY ASSURANCE

A. INSTALLATION COMPANY:
 1. SHALL BE A COMPANY SPECIALIZING IN THE WORK OF THIS SECTION
 2. SHALL HAVE A MINIMUM FIVE YEARS EXPERIENCE IN THE INSTALLATION OF EIFS, WITH EXPERIENCE WITH PROJECTS OF THE SCOPE AND COMPLEXITY OF THE SPECIFIED PROJECT.
 3. SHALL EMPLOY INSTALLATION PERSONNEL QUALIFIED IN THE TROWEL TRADES AND EXPERIENCED IN EIFS INSTALLATION.

B. INSULATION BOARD MANUFACTURER:
 1. SHALL BE APPROVED IN WRITING BY EIFS MANUFACTURER FOR THE EXPANDED POLYSTYRENE INSULATION BOARD.
 2. SHALL MANUFACTURE THE INSULATION BOARD ACCORDING TO EIFS MANUFACTURER'S SPECIFICATIONS.

C. SEALANT CONTRACTOR:
 1. THE GENERAL CONTRACTOR OR OWNER SHALL ENSURE THAT THE SEALANT CONTRACTOR IS QUALIFIED TO PERFORM THE SEALANT WORK IN ACCORDANCE WITH THE SEALANT MANUFACTURER'S SPECIFICATIONS.
 2. THE APPLICATOR SHALL BE PROPERLY TRAINED SO THAT A COMPETENT INSTALLATION OF THE SPECIFIED SEALANT SYSTEM IS ACHIEVED.

SECTION 072400 - EXTERIOR INSULATION AND FINISH SYSTEMS (EIFS) - CONTINUED

3.8 DELIVERY, STORAGE AND HANDLING

A. DELIVER MATERIALS TO THE JOBSITE IN ORIGINAL UNOPENED PACKING WITH LABELS INTACT.
B. PROTECT MATERIALS FROM DAMAGE BY STORING IN A COOL, DRY SPACE, PROTECTED FROM DIRECT SUN AND FREEZING TEMPERATURES. BUCKETS SHALL NOT BE STACKED MORE THAN THREE CONTAINERS HIGH.

3.9 JOB CONDITIONS / ENVIRONMENTAL REQUIREMENTS

A. MATERIALS SHALL NOT BE APPLIED TO A SUBSTRATE WITH A TEMPERATURE LOWER THAN 4°F OR HIGHER THAN 100°F.

B. THE AMBIENT AIR TEMPERATURE WILL BE A MINIMUM OF 40°F AND RISING AT THE TIME OF INSTALLATION AND REMAIN SO FOR TWENTY-FOUR (24) HOURS THEREAFTER.

C. FOR EIFS INSTALLATION IN AMBIENT TEMPERATURES LOWER THAN 40°F, ENCLOSE THE AREA AND APPLY SUPPLEMENTARY HEAT DURING INSTALLATION AND FOR A MINIMUM OF TWENTY-FOUR (24) HOURS AFTER THE INSTALLATION OF MATERIALS IS COMPLETE.

D. DO NOT INSTALL EIFS MATERIALS DURING RAIN OR OTHER INCLEMENT WEATHER, AND AFTER SUCH WEATHER, WAIT UNTIL SURFACES ARE COMPLETELY DRY BEFORE RESUMING WORK.

E. ADJACENT AREAS AND MATERIALS SHALL BE PROTECTED TO PRECLUDE DAMAGE DURING MATERIALS INSTALLATION.

F. THE EIFS ASSEMBLY SHALL BE PROTECTED FROM WEATHER IMMEDIATELY AFTER INSTALLATION THROUGH USE OF FLASHING. PLASTIC SHOULD BE USED TO COVER AREAS THAT MAY BE EXPOSED TO MOISTURE PRIOR TO DRYING.

G. PROPER SCHEDULING OF THE INSTALLATION WILL BE COORDINATED WITH THE GENERAL CONTRACTOR AND THE JOB WILL BE STAFFED TO MAINTAIN THE SCHEDULE ESTABLISHED.

H. THE GENERAL CONTRACTOR SHALL PROVIDE ACCESS TO ELECTRIC POWER AND CLEAN WATER WHERE THE EIFS SYSTEM IS TO BE INSTALLED.

3.10 WARRANTY

A. EIFS MANUFACTURER TO PROVIDE A WRITTEN 10-YEAR LIMITED WARRANTY AGAINST DEFECTIVE MATERIALS EXCLUDING WORKMANSHIP ASSOCIATED WITH THE INSTALLATION OF THE EIFS SYSTEM.

SECTION 07600 - FLASHING AND SHEET METAL

1.1 GENERAL

A. GENERAL: PROVIDE FLASHING AND SHEET METAL, REGLETS, AND ACCESSORIES AS REQUIRED FOR ROOF REPAIRS AS REQUIRED FOR COMPLETE, WEATHERTIGHT INSTALLATION.

B. FLASHING/SHEET METAL AT STOREFRONT IS PREFINISHED.

C. STANDARDS: CONFORM TO SMACNA "ARCHITECTURAL SHEET METAL MANUAL" REQUIREMENTS FOR FLASHING AND SHEET METAL.

D. DESIGN REQUIREMENTS: ALLOW FOR MOVEMENT OF COMPONENTS WITHOUT CAUSING BUCKLING, FAILURE OF JOINT SEALS, UNDUE STRESS OF FASTENERS OR OTHER DETRIMENTAL EFFECTS, WHEN SUBJECT TO 100 YEAR SEASONAL TEMPERATURE RANGES.

E. SUBMITTALS: FURNISH PRODUCT DATA FOR MANUFACTURED PRODUCTS.

F. WARRANTY: CORRECT FAILURE OF METAL FLASHING SYSTEM TO RESIST PENETRATION OF WATER AND DAMAGE FROM WIND; WARRANTY PERIOD TWO YEARS.
 1. FLASHING AND SHEET METAL: MATCH EXISTING, BUT NOT LESS THAN FOLLOWING. GALVANIZED METAL FLASHING: ASTM A924 AND A653 G90 GALVANIZED STEEL: MINIMUM 24 GAUGE.
 2. PREFINISHED METAL FLASHING: 24 GAUGE GALVANIZED STEEL WITH FACTORY FINISHED KYNAR 500 TYPE FLUOROPOLYMER COATING AND STRIPPABLE PROTECTIVE FILM; COLOR AS SELECTED FROM MANUFACTURER'S FULL RANGE OF COLORS.
 3. ALUMINUM FLASHING: ASTM B209, ALLOY AS REQUIRED TO MATCH FINISH SPECIFIED FOR OTHER ALUMINUM COMPONENTS; THICKNESS MINIMUM 0.050" AT FLASHINGS.
 4. STAINLESS STEEL SHEET METAL: ASTM A666, 2D ANNEALED FINISH, SOFT TEMPER EXCEPT WHERE HARDER TEMPER IS REQUIRED FOR FORMING OR PERFORMANCE; 0.015" (28 GAUGE) TYPICAL.
 5. COPPER SHEET METAL: ASTM B370, COLD ROLLED 16 OZ. (0.0216") THICK; SOFT TEMPER WHERE REQUIRED FOR FORMING.

G. REGLETS: FRY/SPRINGLOK OR MM SYSTEMS/SNAP-TITLE REGLETS; FABRICATE OF SAME METAL AS ADJACENT FLASHING AND SHEET METAL.

H. METAL TO METAL SEALANT: BUTYL TYPE; NON-STAINING, NON-CORROSIVE, NON-SHRINKING, NON-SAGGING, ULTRA-VIOLET AND OZONE RESISTANT.

SECTION 07900 - SEALANTS

1.1 SUBMITTALS

A. SUBMIT ALL REQUIRED LEED DOCUMENTATION FOR MANDATORY AND DESIRABLE CREDITS NOTED IN PARAGRAPH 1.5 PER THE SUBMITTAL REQUIREMENTS, OUTLINED IN SECTION 01352.

RELATED LEED® CREDITS
 BUILDING PRODUCT DISCLOSURE AND OPTIMIZATION- SOURCING OF RAW MATERIALS -OPTION 2– LEADERSHIP EXTRACTION PROCESSES

 BUILDING PRODUCT DISCLOSURE AND OPTIMIZATION

 LOW-EMITTING MATERIALS

1.2 GENERALS

A. THIS SECTION CONTAINS REQUIREMENTS PERTAINING TO ALL SEALANTS USED ON THE PROJECT AND BECOMES A PART OF ALL SECTIONS CONTAINING REFERENCES TO THIS SECTION, OR WHEN SEALANTS ARE INDICATED ON THE DRAWINGS OR REQUIRED TO MAKE THE BUILDING WEATHERPROOF.

B. DO NOT INSTALL SEALANTS UNDER ADVERSE WEATHER CONDITIONS, OR WHEN TEMPERATURES ARE BEYOND MANUFACTURER'S RECOMMENDED LIMITS.

C. WARRANT SEALANTS AGAINST DEFECTIVE MATERIALS AND WORKMANSHIP FOR 5 YEARS AFTER SUBSTANTIAL COMPLETION. WARRANTY SHALL FURTHER STATE THAT INSTALLED SEALANTS ARE WARRANTED AGAINST THE FOLLOWING:

 a. WATER LEAKAGE THRU SEALED JOINTS.

 b. ADHESIVE OR COHESIVE FAILURE OF SEALANT.

 c. STAINING OF ADJACENT SURFACES CAUSED BY MIGRATION OF SEALANTS OR PRIMER.

 d. CHALKING OR VISIBLE COLOR CHANGE OF THE CURED SEALANTS.

D. COLORS: CUSTOM COLORS SELECTED BY THE ARCHITECT TO MATCH FINISH MATERIALS.

E. COMPATIBILITY: VERIFY THAT SELECTED SEALERS WILL NOT CAUSE STAINING, DEGRADATION AND PREMATURE AGING OF THE ADJACENT SURFACES AND THE SEALANT ITSELF WHEN IN CONTACT WITH THESE SURFACES.

F. FOR INTERIOR LOCATIONS, OTHER THAN FLOORS, SUCH AS CERAMIC WALL TILE, PLUMBING FIXTURES AND OTHERS WHERE A MILDEW-RESISTANT SEALANT IS REQUIRED:

 DOW CORNING CORP.; 786.

G. EMPLOY ONLY PROVEN INSTALLATION TECHNIQUES WHICH WILL ENSURE THAT SEALANTS ARE INSTALLED IN UNIFORM, CONTINUOUS RIBBONS WITHOUT GAPS OR AIR POCKETS AND WITH COMPLETE "WETTING" OF THE RABBET SURFACES EQUALLY ON OPPOSITE SIDES.

H. FILL RABBETS TO A SLIGHTLY CONCAVE SURFACE JUST BELOW ADJACENT SURFACES. FOR NORMAL JOINTS NOT SUBJECT TO TRAFFIC: FILL JOINTS TO A DEPTH EQUAL TO 50% OF JOINT WIDTH, BUT NOT LESS THAN 1/4" DEEP OR MORE THAN 1/2" DEEP, MEASURED AT THE CENTER (THIN) SECTION OF THE BEAD.

I. REMOVE EXCESS SEALANT SPILLAGE PROMPTLY AS THIS WORK PROGRESSES. CLEAN ADJACENT SURFACES BY RECOMMENDED MEANS TO REMOVE SEALANT, BUT NOT DAMAGE THE SURFACES.

1.3 PRODUCTS

A. WOOD SUBSTRATE SPECIFIC ADHESIVES:
 1. TITEBOND GREENCHOICE ADVANCED POLYMER PANEL ADHESIVE - 4319A
 2. WILSONART 3105 PVA COLD PRESS ADHESIVE

B. SPECIAL PURPOSE CONTACT ADHESIVES:
 1. 3M VHB TAPE
 2. LIQUID NAILS HEAVY DUTY CONSTRUCTION ADHESIVE LN-903

C. CONTACT ADHESIVES:
 1. 3M FASTBOND #30NF CONTACT ADHESIVE, WWW.3M.COM
 2. WILSONART 3034 POSTFORM EDGE PVA ADHESIVE
 3. PEG ADHESIVES - PEG 2020 WATER BASED

D. WALL BASE ADHESIVE
 1. ROBERTS CONSOLIDATED INDUSTRIES, INC. - 7200 WALL BASE ADHESIVE

E. E-GRIP III ONE-COMPONENT POLYURETHANE ADHESIVE (FOR NIKE REGRIND)

F. MULTIPURPOSE ADHESIVE
 1. HENKEL CORPORATION - LOCTITE POWER GRAB TUB SURROUNDS CONSTRUCTION ADHESIVE

G. CARPET ADHESIVE
 1. XL BRANDS - GRID-SET GREEN ADHESIVE 2000

1.4 EXECUTION AND INSTALLATION

A. MINIMIZE USE OF SEALANTS, CAULKS, AND ADHESIVES THROUGH PROPER DETAILING, INCLUDING ADEQUATE OVERHANGS AND EAVES, FLASHING, AND PROPER LAPPING OF BUILDING PAPER AND TRIM.

B. USE OAKUM TO SEAL AROUND PENETRATIONS WHERE FEASIBLE.

C. USE DRY ADHESIVE SEALANT TAPE INSTEAD OF WET SEALANTS WHERE FEASIBLE.

SECTION 08100 - HOLLOW METAL DOORS AND FRAMES

PART 1 - GENERAL

1.1 SUBMITTALS

A. SUBMIT ALL REQUIRED LEED DOCUMENTATION FOR MANDATORY AND DESIRABLE CREDITS NOTED IN PARAGRAPH 1.5 PER THE SUBMITTAL REQUIREMENTS, OUTLINED IN SECTION 01352.

RELATED LEED® CREDITS
MATERIALS & RESOURCES - LEED-CI CREDIT - BUILDING PRODUCT DISCLOSURE AND OPTIMIZATION- SOURCING OF RAW MATERIALS -OPTION 2– LEADERSHIP EXTRACTION PROCESSES

MATERIALS & RESOURCES - LEED-CI CREDIT - BUILDING PRODUCT DISCLOSURE AND OPTIMIZATION BUILDING PRODUCT DISCLOSURE AND OPTIMIZATION

PART 2 - PRODUCTS

2.1 MATERIALS

A. PROVIDE PRODUCTS WITH AN EXACT OR MINIMUM RECYCLED CONTENT OF STEEL PRODUCTS SO POST-CONSUMER RECYCLED CONTENT PLUS ONE-HALF OF PRE-CONSUMER RECYCLED CONTENT IS NOT LESS THAN 60 PERCENT.

.

2.2 PRODUCTS

A. MANUFACTURERS - NOTIFY ARCHITECT IF UNAVAILABLE. ANY ALTERNATES MUST BE REVIEWED AND APPROVED BY ARCHITECT AND GBS.:

 1. THE CECO CORP (PREFERRED), TELEPHONE: (888) 264-7474 (541)
 ADDRESS: 9159 TELECOM DRIVE, MILAN, TN 38358
 WWW.CECODOOR.COM

 2. BARON METAL (ALTERNATE) -
 TELEPHONE: (800) 263-7515
 ADDRESS: 101 ASHBRIDGE CIRCLE, WOODBRIDGE, ONTARIO L4L 3R5 CANADA
 WWW.BARONMETAL.COM

B. REFERENCE STANDARDS: SDI 100, RECOMMENDED SPECIFICATIONS FOR STANDARD STEEL DOORS AND FRAMES.

C. COMPLY WITH THE DISABLED ACCESS REQUIREMENTS OF THE APPLICABLE BUILDING CODES, ALL LOCAL AND STATE CODES AND AMERICANS WITH DISABILITIES ACT (ADA).

D. FIRE RESISTANCE: PROVIDE FIRE-RATED DOOR AND FRAME ASSEMBLIES BEARING THE LABEL OF A TESTING AGENCY ACCEPTABLE TO THE BUILDING DEPARTMENT FOR THE FIRE RESISTANCE INDICATED.

E. HOLLOW METAL DOORS: SDI MODEL 3 OR 4, SEAMLESS GRADE II -HEAVY DUTY STEEL DOORS (18 GAGE) FOR DOORS UP TO 3 FT. WIDE, AND GRADE III - EXTRA HEAVY STEEL DOORS (16 GAGE) FOR DOORS WIDER THAN 3 FT. NO SEAMS PERMITTED IN DOOR EDGES. CLOSE THE TOP OF ALL OUTSWINGING EXTERIOR DOORS WITH AN INVERTED CHANNEL.

F. HOLLOW METAL DOOR FRAMES: CONSTRUCTED OF 16 GAGE STEEL, WITH CORNERS MITERED, WELDED AND GROUND SMOOTH FOR UNIT FRAMES.

G. INSERTS, BOLTS AND FASTENERS: MANUFACTURER'S STANDARD UNITS, EXCEPT HOT-DIP GALVANIZE ALL ITEMS IN EXTERIOR WALLS.

H. PAINTS: SHOP PRIMER: MANUFACTURER'S STANDARD RUST-INHIBITIVE SHOP PAINT, ETHER AIR-DRYING OR BAKING, COMPATIBLE WITH SPECIFIED FINISH PAINT.

I. DOOR FILLER: IN ACCORDANCE WITH SDI 100, EXCEPT USE UL LISTED MATERIALS IN FIRE-RATED DOORS.

J. SET FRAMES ACCURATELY IN THEIR SCHEDULED LOCATIONS, PLUMB, STRAIGHT, SQUARE AND RIGID. COORDINATE THE INSTALLATION OF BUILT-IN ANCHORS FOR WALL AND PARTITION CONSTRUCTION WITH RELATED TRADES.

K. INSTALL FIRE-RATED FRAMES IN ACCORDANCE WITH UL TESTED PROCEDURES.

L. PROVIDE UL TESTED ADJUSTABLE FLOOR CLIPS FOR ALL FRAMES. ANCHOR CLIPS TO FLOOR WITH POWDER-DRIVEN PINS OR BOLTS IN EXPANSION SHIELDS.

M. LEAVE DOOR FRAME SPREADER BARS INTACT, WHEREVER POSSIBLE, UNTIL FRAMES ARE SET PERFECTLY SQUARE AND PLUMB AND ALL ANCHORS ARE SECURELY ATTACHED AND GROUTED WHERE REQUIRED.

N. HANG DOORS IN ACCORDANCE WITH THEIR MANUFACTURER'S INSTRUCTIONS, AND ADJUST TO THE CLEARANCES SPECIFIED IN SDI PUBLICATION 100, EXCEPT WHERE MORE STRINGENT CLEARANCES ARE INDICATED ON THE DRAWINGS OR REQUIRED BY UL LISTING FOR FIRE-RATED DOORS.

O. INSTALL FINISH HARDWARE IN ACCORDANCE WITH ITS MANUFACTURER'S TEMPLATES AND PRINTED INSTRUCTIONS. ADJUST HARDWARE SO THAT DOORS OPERATE FREELY FOR THEIR ENTIRE TRAVEL, BUT NOT LOOSELY, WITHOUT STICKING OR HINGE BINDING, WITH ALL HARDWARE ADJUSTED, LUBRICATED AND FUNCTIONING PROPERLY.

P. CLEAN DAMAGED PRIMER, SAND SMOOTH, RECLEAN AND SPOT-PRIME WITH A PAINT COMPATIBLE WITH THE PRIMER AND THE SCHEDULED FINISH COATS.

SECTION 08400 - ALUMINUM STOREFRONT

RELATED LEED® CREDITS
 MINIMUM ENERGY EFFICIENCY PERFORMANCE
 CONSTRUCTION WASTE MANAGEMENT
 BUILDING PRODUCT DISCLOSURE AND OPTIMIZATION- SOURCING OF RAW MATERIALS -OPTION 2– LEADERSHIP EXTRACTION PROCESSES
 BUILDING PRODUCT DISCLOSURE AND OPTIMIZATION
 LOW-EMITTING MATERIALS

1.1 GENERAL

A. PROVIDE AND INSTALL CLEAR ANODIZED ALUMINUM STOREFRONT FRAMING COMPLETE WITH SUBFRAMES, REINFORCEMENT, STIFFENERS, ANCHORS AND SEALANTS FOR THE WORK OF THIS SECTION.

B. SUBMIT LARGE SCALE, DIMENSIONED SHOP DRAWINGS IN ACCORDANCE WITH THE REQUIREMENTS OF THE FOLLOWING:

 1 SHOW JOINERY TECHNIQUES, FRAMING MEMBER PROFILES, DOORS AND TRACK, AND OTHER OPERATING COMPONENTS. IDENTIFY ALL MATERIALS INCLUDING GLASS TYPES, GLAZING MATERIALS AND HARDWARE.

 2. SHOW RELATIVE LAYOUT OF STRUCTURAL SUPPORT, ADJACENT METAL FRAMING AND MATERIALS, STEEL TUBE COLUMNS, SLAB AND FLOOR FINISHES, ALL CORRECTLY DIMENSIONED.

C. SAMPLES: SUBMIT TWO (2) METAL SAMPLES, NOT LESS THAN 12" LONG WITH SPECIFIED FINISH AND COLOR.

D. FABRICATOR/INSTALLER'S QUALIFICATIONS: WORK SHALL BE PERFORMED BY A FIRM WITH A MINIMUM OF 5 YEARS EXPERIENCE FABRICATING AND ERECTING WORK SIMILAR TO THAT REQUIRED FOR THIS PROJECT.

E. COMPLY WITH "CARE AND HANDLING OF ARCHITECTURAL ALUMINUM FROM SHOP TO SITE" PUBLISHED BY AAMA, AND THE APPLICABLE REQUIREMENTS OF SECTION 01600.

F. WARRANT THE WORK OF THIS SECTION AGAINST DEFECTIVE MATERIALS AND WORKMANSHIP FOR 2 YEARS AFTER SUBSTANTIAL COMPLETION. REPAIR OR REPLACE, WHEN REPAIRS ARE ACCEPTABLE TO THE OWNER, DEFECTIVE MATERIALS AND WORKMANSHIP DURING THE WARRANTY PERIOD AT NO COST TO THE OWNER.

G. ENTRY DOORS: MODIFIED WIDE STILE ALUMINUM FRAME DOORS AS INDICATED ON THE DRAWINGS.

H. STOREFRONT: EXTRUDED ALUMINUM PROFILES AS SHOWN ON THE DRAWINGS.

I FASTENERS: ALUMINUM OR TYPE 302/304 STAINLESS STEEL FOR ALUMINUM; HOT-DIP GALVANIZED STEEL FOR STEEL-TO-STEEL AND STEEL-TO-CONCRETE. DO NOT USE EXPOSED FASTENERS.

J. SEALANTS AND BACK-UP RODS WITHIN ASSEMBLIES: MANUFACTURER'S STANDARD NON-DRYING, NON-SKINNING SEALANT COMPLYING WITH AAMA 809.2.

K. SEALANTS AND BACK-UP RODS BETWEEN ASSEMBLIES AND ADJACENT MATERIALS

L. PRODUCTS OF THE FOLLOWING MANUFACTURERS ARE ACCEPTABLE: US ALUMINUM, VISTAWALL, KAWNEER, AND TUBELITE.

M. MAINTAIN THE VISUAL DESIGN CONCEPTS SHOWN, INCLUDING MEMBER SIZES, PROFILES AND ALIGNMENT OF COMPONENTS. PROVIDE MODIFIED SECTIONS AND INTERNAL STIFFENERS WHERE REQUIRED AND AS NECESSARY.

N. EXPOSED ALUMINUM SURFACES: ARCHITECTURAL CLASS I ANODIC COATING WITH COLOR CONFORMING TO ALUMINUM ASSOCIATION STANDARD AA-M12 C22 A42/44. COLOR AS INDICATED ON THE DRAWINGS.

O. CONCEALED SURFACES: PRIME CONCEALED ALUMINUM SURFACES IN CONTACT WITH MASONRY, CONCRETE OR STEEL WITH A BITUMINOUS PAINT. PRIME STEEL PARTS OF ANCHORS, ANCHOR INSERTS, REINFORCEMENT AND SUPPORTS WITH RUST-INHIBITIVE PRIMER.

P. INSTALL COMPONENTS LEVEL, PLUMBS, TRUE TO LINE AND WITH UNIFORM JOINTS AND REVEALS. ATTACH SECURELY TO STRUCTURE WITH NON-STAINING AND NON-CORROSIVE SHIMS, ANCHORS, FASTENERS AND SPACERS.

Q. PROVIDE ALL ACCESSORIES SUCH AS FASTENINGS, SEALANTS AND CONCEALED ANCHORAGE NEEDED FOR A COMPLETE WEATHER PROOF INSTALLATION.

R. ERECTION TOLERANCES:

 1. DEVIATION FROM ESTABLISHED VERTICAL, HORIZONTAL OR DESIGNED POSITION SHALL NOT EXCEED 1/8 INCH PER 10 FEET OF LENGTH OF ANY MEMBER, OR 1/4 INCH IN ANY TOTAL RUN IN ANY LINE.

 2. MAXIMUM OFFSET FROM TRUE ALIGNMENT BETWEEN 2 CONSECUTIVE MEMBERS PLACED END-TO-END SHALL NOT EXCEED 1/16 INCH.

 3. MAXIMUM OFFSET BETWEEN GLASS FRAMING MEMBERS AT CORNERS OF GLAZING POCKET MUST NOT EXCEED 1/32 INCH.

S. PROVIDE TAPE SEPARATOR BETWEEN CONTACT SURFACES OF DISSIMILAR MATERIALS WHERE THERE IS A POSSIBILITY OF CORROSIVE OR ELECTROLYTIC ACTION.

T. GLAZING: GLAZE ASSEMBLIES IN ACCORDANCE WITH THE GLASS MANUFACTURER'S PRINTED INSTRUCTIONS AND THE RECOMMENDATIONS OF FGMA "GLAZING MANUAL".

SECTION 08400 - ALUMINUM STOREFRONT - CONTINUED

U. HANGING DOORS: INSTALL FINISH HARDWARE ON DOORS IN ACCORDANCE WITH ITS ANUFACTURER'S PRINTED INSTRUCTIONS. HANG DOORS AND ADJUST HARDWARE SO DOORS OPERATE FREELY FOR THEIR ENTIRE TRAVEL, WITHOUT STICKING OR BINDING.

SECTION 08800 - GLAZING

RELATED LEED® CREDITS

ENERGY & ATMOSPHERE LEED V4 ID+C CREDIT– MINIMUM ENERGY EFFICIENCY PERFORMANCE

MATERIALS AND RESOURCES LEED V4 ID+C CREDIT- CONSTRUCTION WASTE MANAGEMENT

MATERIALS AND RESOURCES LEED V4 ID+C CREDIT- BUILDING PRODUCT DISCLOSURE AND OPTIMIZATION- SOURCING OF RAW MATERIALS -OPTION 2– LEADERSHIP EXTRACTION PROCESSES

MATERIALS AND RESOURCES LEED V4 ID+C CREDIT – BUILDING PRODUCT DISCLOSURE AND OPTIMIZATION

INDOOR ENVIRONMENTAL QUALITY LEED V4 ID+C CREDIT- LOW-EMITTING MATERIALS INDOOR ENVIRONMENTAL QUALITY LEED V4 ID+C CREDIT- LOW-EMITTING MATERIALS

INDOOR ENVIRONMENTAL QUALITY LEED V4 ID+C CREDIT -DAYLIGHT

PART 1 - GENERAL

1.1 DEFINITIONS

A. U-FACTOR - BTU/HR·SQ.FT.°F: LOWER VALUE MEANS HIGHER INSULATION VALUE.

B. R-VALUE - INVERSE OF U-VALUE: RESISTANCE TO HEAT FLOW. HIGHER VALUE MEANS HIGHER INSULATION VALUE.

C. CENTER-OF-GLASS PERFORMANCE VALUES: U-FACTOR OR R-VALUE CALCULATED AT CENTER OF GLASS (NO "EDGE EFFECT")

D. UNIT PERFORMANCE VALUES: U-FACTOR OR R-VALUE CALCULATED FOR ENTIRE GLAZING AREA (NFRC-CERTIFIED VALUES BASED ON STANDARD-SIZED GLAZING UNITS)

E. VISIBLE TRANSMITTANCE - T*vis*: % OF LIGHT ENERGY TRANSMITTED BY GIVEN GLAZING.

F. SOLAR HEAT GAIN COEFFICIENT (SHGC): MEASURE OF TOTAL SOLAR HEAT TRANSMITTED BY GIVEN GLAZING

G. SHADING COEFFICIENT: SOLAR HEAT TRANSMITTED RELATIVE TO A SINGLE GLASS PANE

H. LUMINOUS EFFICACY FACTOR - (ke) = T*vis*/SC: RATIO OF LIGHT TRANSMISSION DIVIDED BY SHADING COEFFICIENT

I. SOLAR REFLECTANCE: % OF LIGHT OR SOLAR ENERGY THAT A GIVEN GLAZING REFLECTS TO THE OUTSIDE

J. TINTED GLASS: CONTROLS THE AMOUNT OF SUNLIGHT ADMITTED

K. SPECTRALLY SELECTIVE GLAZING: GLAZING THAT SELECTIVELY TRANSMIT SUNLIGHT OF PARTICULAR WAVELENGTH TO MINIMIZE UNWANTED HEAT GAIN WHILE HAVING MINIMAL IMPACT ON VISIBLE LIGHT TRANSMISSION

1.2 SUBMITTALS

A. WINDOW UNIT U-FACTOR PERFORMANCE: MEASURED IN ACCORDANCE WITH NATIONAL FENESTRATION RATING COUNCIL (NFRC) 100, MEASURING TOTAL U-FACTOR FOR A WINDOW AVERAGED OVER THE ENTIRE UNIT (ACCOUNTING FOR EDGE LOSSES).

B. INSULATING GLASS SHALL BE CERTIFIED UNDER A SEALED INSULATING GLASS MANUFACTURERS' ASSOCIATION (SIGMA)-APPROVED CERTIFICATION PROGRAM.

C. SUBMIT WRITTEN WARRANTY FOR HERMETICALLY SEALED INSULATING GLASS UNIT, AGREEING TO REPLACE UNITS WHICH FAIL TO MAINTAIN HERMETIC SEAL OF AIR SPACE, DETERIORATE, OR OTHERWISE FAIL TO PERFORM AS REQUIRED WITHIN 10 YEARS AFTER DATE OF SUBSTANTIAL COMPLETION AS A RESULT OF FAILURE OF MATERIALS OR WORKMANSHIP.

1.3 DESIGN REQUIREMENTS AND ENERGY EFFICIENCY

A. GLAZING INSULATION PERFORMANCE FOR HEATING CLIMATES: GLAZING SYSTEM SHALL MEET OR EXCEED THE FOLLOWING UNIT U-FACTORS BASED ON NFRC STANDARDS:
 1. MULTIPLE LOW-E COATINGS OR FILMS BETWEEN INTERIOR AND EXTERIOR PANES OF GLASS WITH ARGON OR KRYPTON GAS BETWEEN THE PANES: U < 0.20
 2. ONE LAYER OF SELECTIVE LOW-E COATING FILM BETWEEN TWO LAYERS OF GLASS WITH ARGON OR KRYPTON GAS BETWEEN THE PANES: U < 0.25
 3. TWO LAYERS OF GLASS, ONE OF WHICH IS COATED A LOW-E COATING, WITH ARGON OR KRYPTON GAS BETWEEN THE PANES: U < 0.30

B. SOLAR HEAT GAIN COEFFICIENT (SHGC) FOR COOLING CLIMATES: GLAZING SYSTEM SHALL MEET OR EXCEED THE FOLLOWING SHGC:
 1. SELECTIVE LOW-E COATING: SHGC < 0.40

C. LUMINOUS EFFICACY: GLAZING SHALL MEET OR EXCEED A LUMINOUS EFFICACY OF Ke = 1.0.

PART 2 - PRODUCTS

2.1 GLASS GLAZING

A. INSULATING GLASS: CERTIFIED UNDER SIGMA-APPROVED PROGRAM AND MEETING CBA GRADE REQUIREMENT
 1. SPACERS: SELECT LOW-CONDUCTIVITY SPACERS; USE ONE OF THE FOLLOWING:
  a. THIN-GAUGE, C-SECTION STEEL
  b. STEEL-REINFORCED BUTYL RUBBER
  c. THERMALLY BROKEN ALUMINUM
  d. POLYURETHANE AND SILICON FOAMS

2.2 RELATED GLAZING MATERIALS

A. LOW-EMISSIVITY COATINGS:
 1. COATING(S) ON GLASS
 2. COATING ON SUSPENDED PLASTIC FILM

B. HEAT-ABSORBING GLASS - TINTED: GREEN OR BLUE

C. GAS FILL:
 1. ARGON
 2. KRYPTON

2.3 GLAZING MATERIALS

A. SEALANTS FOR GLAZING: ONE-PART, GUN-GRADE, WHITE SILICONE

B. JOINT BACKER: DIAMETER SIZE AT LEAST 25% LARGER THAN JOINT WIDTH; TYPE AND MATERIAL AS RECOMMENDED IN WRITING BY GLASS AND SEALANT MANUFACTURER

C. GLAZING BLOCKS AND SPACERS: CLOSED-CELL NEOPRENE COMPLYING WITH ASTM C509, IN BLACK COLOR

D. GLAZING GASKETS FOR FACTORY-GLAZE UNITS: UNIT MANUFACTURER'S STANDARD PREFORMED TYPES AND SIZES AS REQUIRED

E. GLAZING TAPE: PVC GASKET COMPLYING WITH ASTM D2287

F. WEATHER STRIPPING: SPECIFY COMPRESSION-TYPE WEATHERSTRIPPING FOR CASEMENT AND AWNING WINDOW TYPES.

PART 3 - EXECUTION

3.1 INSTALLATION

A. COMPRESSION GASKETS: MITER-CUT AT CORNERS AND INSTALL IN MANNER RECOMMENDED BY GASKET MANUFACTURER TO PREVENT PULL-AWAY AT CORNERS.

B. CLOSE AND TIGHTLY SEAL ALL PARTIALLY USED SEALANT CONTAINERS AND STORE PROTECTED IN WELL-VENTILATED, FIRE-SAFE AREA AT MODERATE TEMPERATURE.

3.2 WASTE MANAGEMENT

A. SEPARATE FLOAT GLASS AND PLACE IN DESIGNATED AREAS FOR REUSE OR RECYCLING (CANNOT BE RECYCLED WITH BEVERAGE-CONTAINER GLASS).

B. SEPARATE TEMPERED GLASS FOR USE AS AGGREGATE OR NONSTRUCTURAL FILL.

C. SEPARATE PLASTIC MATERIALS AND PLACE IN DESIGNATED AREAS FOR REUSE OR RECYCLING (IF RECYCLING OPTIONS ARE AVAILABLE LOCALLY.)

D. SEPARATE CORRUGATED CARDBOARD IN ACCORDANCE WITH THE WASTE MANAGEMENT PLAN AND PLACE IN DESIGNATED AREAS FOR RECYCLING.

Architect:

ARCHITECT OF RECORD:
BRR ARCHITECTURE, INC
8131 METCALF AVE
SUITE 300
OVERLAND PARK, KS 66204

www.brrarch.com

TEL: 913-262-9095
FAX: 913-262-9044

COPYRIGHT NOTICE

This drawing was prepared for use on a specific site contemporaneously with its issue date and it is not suitable for use on a different project site or at a later time. Use of this drawing for reference or example on another project requires the services of properly licensed architects and engineers. Reproduction of this drawing for reuse on another project is not authorized and may be contrary to the law.

Engineer:

Project Owner:

NIKE, Inc.
One Bowerman Drive
Beaverton, OR 97005
(503) 671-6453
www.nike.com

Project Address:

NIKE FACTORY STORE
WATERFORD LAKES
SHOPPING CENTER
449 N. ALAFAYA TRAIL
ORLANDO, FL 32828
TEMPLATE ISSUE DATE: 11/28/2018

Fixture Package:

UNITE

Stamp:

NOT FOR CONSTRUCTION

Issued For:

PERMIT/BID

Issue Date:

11/06/2020

Revisions:

NO.	REASON	DATE

PROJECT MANAGER:
KH

CHECKED BY:

DRAWN BY:
RAN

Project Number:

62301411

Sheet Title:

ARCHITECTURAL SPECIFICATIONS

Sheet Number:

AS7.0

SECTION 09250 - GYPSUM BOARD

PART 1 - GENERAL

1.1 SUBMITTALS

A. SUBMIT ALL REQUIRED LEED DOCUMENTATION FOR MANDATORY AND DESIRABLE CREDITS NOTED IN PARAGRAPH 1.5 PER THE SUBMITTAL REQUIREMENTS, OUTLINED IN SECTION 01352.

RELATED LEED® CREDITS
BUILDING PRODUCT DISCLOSURE AND OPTIMIZATION - SOURCING OF RAW MATERIALS - OPTION 2- LEADERSHIP EXTRACTION PROCESSES
BUILDING PRODUCT DISCLOSURE AND OPTIMIZATION
LOW-EMITTING MATERIALS

PART 2 - PRODUCTS

2.1 MATERIALS

A. GYPSUM BOARD: SPECIFY MANUFACTURERS THAT TAKE BACK SCRAP FOR RECYCLING.

1. RECYCLED CONTENT:

a. PAPER: 100% POST-CONSUMER RECYCLED CONTENT
b. GYPSUM: POST-INDUSTRIAL AND POST-CONSUMER RECYCLED GYPSUM. CONFIRM HIGHEST LEVEL THAT IS READILY AVAILABLE.
c. SYNTHETIC GYPSUM: 50% RECYCLED CONTENT REQUIRED, 95% RECYCLED CONTENT IF POSSIBLE

B. FIBER GYPSUM WALLBOARD PANELS: FIBER-REINFORCED GYPSUM BOARD

2.3 PRODUCTS

A. MANUFACTURERS - MUST MEET GREEN GUARD GOLD CERTIFIED & CDPH STANDARDS:

1. USG CORPORATION (PREFERRED) TELEPHONE: 800.950.3839
A. USG SHEETROCK ALL PURPOSE JOINT COMPOUND

2. CONTENENTAL BUILDING PRODUCTS (ALTERNATE 1), TELEPHONE: (800) 237-5505
ADDRESS: 12950 WORLDGATE DRIVE, SUITE 700, HERDON, VA 20170
WEBSITE: WWW.CONTINENTAL-BP.COM

3. NATIONAL GYPSUM COMPANY (ALTERNATE 2), TELEPHONE: (800) 628-4662, (704) 365-7300, FAX: (800) 329-6421, ADDRESS: 2001 REXFORD ROAD, CHARLOTTE, NC 28211,
WEBSITE: WWW.NATIONAL-GYPSUM.COM

3.2 INSTALLATION

A. GYPSUM BOARD: COMPLY WITH ASTM C840 AND GA-216, EXCEPT WHERE EXCEEDED BY OTHER REQUIREMENTS.

1. LAY OUT PANELS TO MINIMIZE WASTE; REUSE CUTOFFS WHENEVER FEASIBLE.
2. SELECT PANEL SIZES TO MINIMIZE WASTE.
3. MINIMIZE FRAMING:

a. INSTALL 5/8" GYPSUM OR 1/2" CEILING BOARD OVER FRAMING AT 16" ON CENTER. CEILINGS INSULATED WITH HEAVY OR COMPRESSED INSULATION (SUCH AS CELLULOSE, MINERAL WOOL, OR COMPRESSED FIBERGLASS BATTS) MAY REQUIRE 5/8" GYPSUM BOARD.
b. FLOAT CORNERS WITH SINGLE STUDS AND DRYWALL CLIPS.

B. FIBER GYPSUM BOARD: COMPLY WITH ASTM C840 AND GA-216, EXCEPT WHERE EXCEEDED BY OTHER REQUIREMENTS.

1. LAY OUT PANELS TO MINIMIZE WASTE; REUSE CUTOFFS WHENEVER FEASIBLE.
2. SELECT PANEL SIZES TO MINIMIZE WASTE.
3. INSTALL 1/2" FIBER GYPSUM BOARD OVER FRAMING AT 16" ON CENTER. CEILINGS INSULATED WITH HEAVY OR COMPRESSED INSULATION (SUCH AS CELLULOSE, MINERAL WOOL, OR COMPRESSED FIBERGLASS BATTS) MAY REQUIRE 5/8" FIBER GYPSUM BOARD.

C. TAPING AND FINISHING:

1. TOOL JOINTS AS SMOOTHLY AS POSSIBLE TO MINIMIZE SANDING AND DUST LEVEL 4 FINISH.
2. PROTECT WORKERS, BUILDING OCCUPANTS, AND HVAC SYSTEMS FROM GYPSUM DUST.

SECTION 09310 - CERAMIC TILE FLOORING

PART 1 - GENERAL

1.1 SUBMITTALS

A. SUBMIT ALL REQUIRED LEED DOCUMENTATION FOR MANDATORY AND DESIRABLE CREDITS NOTED IN PARAGRAPH 1.5 PER THE SUBMITTAL REQUIREMENTS, OUTLINED IN SECTION 01352.

RELATED LEED® CREDITS
BUILDING PRODUCT DISCLOSURE AND OPTIMIZATION- SOURCING OF RAW MATERIALS -OPTION 2– LEADERSHIP EXTRACTION PROCESSES

BUILDING PRODUCT DISCLOSURE AND OPTIMIZATION

LOW-EMITTING MATERIALS

1.2 MATERIALS

A. CERAMIC-FREE RECYCLED GLASS TILE: MINIMUM 85% POST-CONSUMER RECYCLED GLASS
B. GLASS-BONDED CERAMIC TILE: MINIMUM 10% POST-CONSUMER RECYCLED GLASS
C. PORCELAIN TILE: MINIMUM 50% POST-INDUSTRIAL FELDSPAR
D. STONE TILE: POST-INDUSTRIAL WASTE
E. CEMENT MORTAR:

1. DRY-SET MORTAR
a. BOSTIK, INC. D-5 PREMIUM THINSET MORTAR (WWW.BOSTIK-US.COM)
2. LATEX-PORTLAND CEMENT MORTAR
3. THIN-SET MORTAR

J. TILE ADHESIVE: WATER-BASED
K. GROUT: CEMENT-BASED, PETROLEUM- AND PLASTIC-FREE GROUT
a. MAIPEI INTERNATIONAL GROUTS (WWW.MAIPEI.COM)
L. SEALANTS: LOW-VOC
1. SINGLE-COMPONENT POLYURETHANE SEALANT
2. TWO-COMPONENT POLYURETHANE SEALANT

SECTION 09510 - ACOUSTICAL CEILINGS

PART 1 - GENERAL

1.1 SUBMITTALS

A. SUBMIT ALL REQUIRED LEED DOCUMENTATION FOR MANDATORY AND DESIRABLE CREDITS NOTED IN PARAGRAPH 1.3 PER THE SUBMITTAL REQUIREMENTS, OUTLINED IN SECTION 01352.

RELATED LEED® CREDITS
BUILDING PRODUCT DISCLOSURE AND OPTIMIZATION- SOURCING OF RAW MATERIALS -OPTION 2– LEADERSHIP EXTRACTION PROCESSES
BUILDING PRODUCT DISCLOSURE AND OPTIMIZATION
LOW-EMITTING MATERIALS

1.2 DELIVERY AND STORAGE

A. DO NOT STORE PANELS NEAR MATERIALS THAT MAY OFFGAS OR EMIT HARMFUL FUMES, SUCH AS KEROSENE HEATERS, FRESH PAINT, ADHESIVES, ETC.

B. DO NOT ALLOW PANELS TO BECOME DAMP. MAINTAIN TEMPERATURES AT 60°F OR HIGHER, AND HUMIDITY BETWEEN 20% AND 60%, PRIOR TO, DURING, AND AFTER INSTALLATION.

1.3 SYSTEM DESIGN

A. AVOID USING AREA ABOVE SUSPENDED CEILING AS RETURN AIR PLENUM.

1.4 CONDITION OF SURFACES

A. SURFACES SHALL BE DRY, AND WET WORK COMPLETED, PRIOR TO COMMENCING.

1.5 INSTALLATION OF CEILING PANELS

A. LAY OUT PANELS TO MINIMIZE WASTE; REUSE CUTOFFS WHENEVER FEASIBLE.
B. SELECT PANEL SIZES TO MINIMIZE WASTE.

SECTION 09682 - CARPET TILE

PART 1 - GENERAL
1.1 SUBMITTALS

A. SUBMIT ALL REQUIRED LEED DOCUMENTATION FOR CREDITS NOTED IN PARAGRAPH 1.5 PER THE SUBMITTAL REQUIREMENTS, OUTLINED IN SECTION 01352.

RELATED LEED® CREDITS
BUILDING PRODUCT DISCLOSURE AND OPTIMIZATION- SOURCING OF RAW MATERIALS -OPTION 2– LEADERSHIP EXTRACTION PROCESSES
BUILDING PRODUCT DISCLOSURE AND OPTIMIZATION
LOW-EMITTING MATERIALS

SECTION 09682 - CARPET TILE - (CONTINUED)

PART 2 - PRODUCTS

A. MANUFACTURERS:
1. INTERFACE, TELEPHONE: 800-634-6032

PART 3 - INSTALLATION

3.1. SITE CONDITIONS

A. THIS PRODUCT IS INTENDED FOR INDOOR USE ONLY. DO NOT USE WHERE THE FLOORING WILL BE EXPOSED TO FUELS, OILS, SOLVENTS, OR OTHER CHEMICALS. AREAS TO RECEIVE FLOORING SHOULD BE WEATHER TIGHT AND MAINTAINED AT A MINIMUM UNIFORM TEMPERATURE OF 65°F (18°C) FOR 48 HOURS BEFORE, DURING AND AFTER THE INSTALLATION.

B. INSTALL CONTENDER TILES FULLY ADHERED OVER WOOD OR CONCRETE SUBFLOORS. CONTENDER INTERLOCKING TILES CAN BE INSTALLED OVER EXISTING RESILIENT FLOORING SUCH AS VINYL, LINOLEUM, LAMINATE, CERAMIC TILE AND WOOD.

C. SURFACE SHOULD BE SMOOTH TO PREVENT IRREGULARITIES, ROUGHNESS OR OTHER DEFECTS FROM TELEGRAPHING THROUGH THE NEW FLOORING.

3.2 MATERIAL STORAGE AND HANDLING

A. STORE THE MATERIAL IN ITS ORIGINAL, UNOPENED PACKAGING WITH ALL LABELS INTACT.

B. INSPECT ALL MATERIALS FOR VISUAL DEFECTS BEFORE BEGINNING THE INSTALLATION. VERIFY THE MATERIAL DELIVERED IS THE CORRECT STYLE, COLOR AND AMOUNT. ANY DISCREPANCIES MUST BE REPORTED IMMEDIATELY BEFORE BEGINNING THE INSTALLATION.

C. REMOVE TILES FROM CARTONS AND ALLOW TO SIT IN THE AREA TO BE INSTALLED, AT UNIFORM ROOM TEMPERATURE 24 HOURS PRIOR TO INSTALLATION.

D. MIX TILES FROM SEVERAL BOXES OR SKIDS. ENSURE THAT JOB SITE AND SUBFLOOR CONDITIONS ARE MET.

E. INSTALL CONTENDER TILES SO THAT THE DIRECTIONAL MARKINGS STAMPED ON THE BOTTOM OF THE TILES POINT IN THE SAME DIRECTION.

3.3 INSTALLATION

A. IT IS CUSTOMARY TO BEGIN TILE INSTALLATIONS FROM THE CENTER OF THE ROOM.
B. MEASURE THE WIDTH OF THE AREA TO BE COVERED.
C. MARK THE CENTER OF THE AREA AT TWO POINTS, ONE AT EACH END.
D. SNAP A CHALK LINE, LINE #1, THROUGH THESE TWO POINTS.
E. DETERMINE THE CENTER POINT OF THE CHALK LINE.
F. USING A CARPENTER'S SQUARE OR ANOTHER METHOD, SNAP A SECOND CHALK LINE, LINE #2, PERPENDICULAR (AT 90°) TO THE FIRST LINE. THE LINES SHOULD INTERSECT AT THEIR CENTERS.
G. THE AREA TO BE COVERED IS NOW DIVIDED INTO QUARTERS. BEGIN THE INSTALLATION AT THE CENTER OF THE AREA, WHERE THE TWO LINES INTERSECT. SEE DIAGRAM 1. CONTENDER TILES MUST BE INSTALLED IN THE SAME DIRECTION. DIRECTIONAL MARKINGS STAMPED ON THE BOTTOM OF THE TILES MUST POINT IN THE SAME DIRECTION.
H. LAY WHOLE TILES FROM LEFT TO RIGHT ALONG CHALK LINE #1 UP TO THE WALL ON THE OPPOSITE SIDE OF CHALK LINE #2. THE LAST TILE WILL LIKELY HAVE TO BE CUT TO FIT AGAINST THE WALL.
I. CUT THE LAST PIECE TO FIT AGAINST THE WALL USING A METAL STRAIGHT EDGE AND A SHARP UTILITY KNIFE. DO NOT COMPRESSION FIT THE TILE AGAINST THE WALL. ALLOW A 1/4" AROUND THE PERIMETER FOR EXPANSION.

SECTION 09820 - ACOUSTICAL INSULATION AND SEALANTS

PART 1 - GENERAL

1.1 SUBMITTALS

A. SUBMIT ALL REQUIRED LEED DOCUMENTATION FOR MANDATORY AND DESIRABLE CREDITS NOTED IN PARAGRAPH 1.5 PER THE SUBMITTAL REQUIREMENTS, OUTLINED IN SECTION 01352.

RELATED LEED® CREDITS
LOW-EMITTING MATERIALS

BUILDING PRODUCT DISCLOSURE AND OPTIMIZATION- SOURCING OF RAW MATERIALS -OPTION 2– LEADERSHIP EXTRACTION PROCESSES

BUILDING PRODUCT DISCLOSURE AND OPTIMIZATION

PART 2 - PRODUCT

2.1 MATERIALS:

A. ACOUSTIC INSULATION: ASTM C665, TYPE I; UNFACED GLASS FIBER BATTS, BLANKETS OR ROLLS; MINIMUM FIRE HAZARD CLASSIFICATION RATING OF 25/50 PER ASTM E84; MINIMUM 3-INCHES THICK, UNLESS REQUIRED OTHERWISE TO MEET THE STC REQUIREMENTS INDICATED OR SPECIFIED; WIDTHS TO FRICTION-FIT BETWEEN STUDS, WHERE INDICATED FOR INSTALLATION IN STUD WALLS.

B. ACOUSTICAL SEALANT: NON-HARDENING, NON-SKINNING, FOR USE IN CONJUNCTION WITH GYPSUM BOARD, SIMILAR TO USG 5 ACOUSTICAL SEALANT.

C. ACCESSORIES: FURNISH OTHER ACCESSORIES SUCH AS FASTENERS AND RETAINERS, NOT SPECIFICALLY DESCRIBED, BUT REQUIRED FOR A COMPLETE INSTALLATION.

2.2 MANUFACTURERS:

A. CERTAINTEED CORPORATION (PREFERRED), TELEPHONE: (800) 233-8990, (610) 341-7000, FAX: (610) 341-7777, ADDRESS: 750 E. SWEDESFORD ROAD, P.O. BOX 860, VALLEY FORGE, PA 19482

B. OWENS CORNING (ALTERNATE 1) WWW.COMMERCIAL.OWENSCORNING.COM

PART 3 - INSTALLATION

A. INSTALL INSULATION IN ACCORDANCE WITH MANUFACTURER'S INSTRUCTIONS AND AS INDICATED.
B. INSTALL INSULATION WITHOUT GAPS OR VOIDS.
C. TRIM INSULATION NEATLY TO FIT SPACES. USE INSULATION MATERIALS FREE OF DAMAGE.
D. SEALANT:

1. INSTALL ACOUSTICAL SEALANT AROUND PERIMETER OF ALL ACOUSTICALLY INSULATED PARTITIONS; ONE CONTINUOUS BEAD AT EACH SIDE OF FRAMING MEMBER INTERFACE WITH SUBSTRATE.
2. SEAL ALL PENETRATIONS THROUGH ACOUSTICAL ASSEMBLIES, EXCEPT FOR PENETRATIONS IN FIRE RATED CONSTRUCTION TO RECEIVE FIRESTOPPING.

SECTION 09900 - PAINTING

PART 1 - GENERAL

1.1 SUBMITTALS

A. SUBMIT ALL REQUIRED LEED DOCUMENTATION FOR MANDATORY AND DESIRABLE CREDITS NOTED IN PARAGRAPH 1.5 PER THE SUBMITTAL REQUIREMENTS, OUTLINED IN SECTION 01352.

RELATED LEED® CREDITS
LOW-EMITTING MATERIALS

1.2 SUMMARY

A. THIS SECTION INCLUDES SURFACE PREPARATION AND FIELD PAINTING OF EXPOSED INTERIOR ITEMS AND SURFACES.

1.3 QUALITY ASSURANCE

A. REQUIREMENTS OF REGULATORY AGENCIES: COMPLY WITH APPLICABLE RULES AND REGULATIONS OF GOVERNING AGENCIES FOR AIR QUALITY CONTROL.

1. COMPLY WITH CURRENT APPLICABLE REGULATIONS OF THE LOCAL AIR QUALITY DISTRICT, CALIFORNIA AIR RESOURCES BOARD (CARB) AND THE ENVIRONMENTAL PROTECTION AGENCY (EPA).
2. REGULATORY CHANGES MAY AFFECT THE FORMULATION, AVAILABILITY, OR USE OF SPECIFIED COATINGS. CONFIRM AVAILABILITY OF COATINGS TO BE USED PRIOR TO START OF PAINTING.
3. PAINT SHALL COMPLY WITH LEED NC-VERSION 2.2, CREDIT EQ 4.2 (GREEN SEAL GS-11 GC-03 AND SCAQMD RULE 1113, DATED JANUARY 1, 2004) HTTP://WWW.GREENSEAL.ORG/.

PART 2 PRODUCTS

2.1 MANUFACTURERS

A. SPECIFIED MANUFACTURER: PRODUCTS OF THE SHERWIN-WILLIAMS COMPANY ARE THE BASIS OF DESIGN PRODUCTS SPECIFIED TO ESTABLISH THE LEVEL OF QUALITY.

SHERWIN WILLIAMS
101 PROSPECT AVENUE NW
CLEVELAND, OH 44115
TEL: (800) 321-8194
FAX: (216) 566-1392
WWW.SHERWIN-WILLIAMS.COM

B. SUBSTITUTIONS: NO SUBSTITUTIONS

SECTION 09900 - PAINTING (CONTINUED)

2.2 APPLICATION/SCOPE

A. SCOPE OF PAINTING IF NOT FULLY DEFINED IN A FINISH SCHEDULE OR ON THE DRAWINGS, THIS SPECIFICATION MUST BE CAREFULLY EDITED TO REFLECT THE SURFACES ACTUALLY FOUND ON THE PROJECT.

B. IF THE PROJECT INVOLVES REPAINTING SOME BUT NOT TO ALL EXISTING PAINTED SURFACES, BE SURE TO INDICATE THE EXTENT OF THE REPAINTING.

C. THE FINISH SCHEDULE DESCRIPTIONS OF EACH ITEM CAN ALSO BE USED TO FURTHER REFINE THE DEFINITION OF WHAT IS TO BE PAINTED, STAINED, OR CLEAR FINISHED.

D. SURFACES TO BE COATED INCLUDE:

METAL - (CEILINGS-STRUCTURAL STEEL, JOISTS, TRUSSES, BEAMS, PARTITIONS, CABINETS, LOCKERS, ETC.)

WOOD - WALLS, DOORS, TRIM, CABINET WORK, ETC.

DRYWALL PLASTER / GYPSUM BOARD - WALLS, CEILINGS

2.3 ACCESSORIES

A. COATING APPLICATION ACCESSORIES:

1. PROVIDE ALL PRIMERS, SEALERS, CLEANING AGENTS, CLEANING CLOTHS, SANDING MATERIALS, AND CLEAN-UP MATERIALS REQUIRED, PER MANUFACTURER'S SPECIFICATIONS.

PART 3 EXECUTION

3.1 METHODS

A. CONCRETE, SSPC-SP13 OR NACE 6
THIS STANDARD GIVES REQUIREMENTS FOR SURFACE PREPARATION OF CONCRETE BY MECHANICAL, CHEMICAL, OR THERMAL METHODS PRIOR TO THE APPLICATION OF BONDED PROTECTIVE COATING OR LINING SYSTEMS. THE REQUIREMENTS OF THIS STANDARD ARE APPLICABLE TO ALL TYPES OF CEMENTITIOUS SURFACES INCLUDING CAST-IN-PLACE CONCRETE FLOORS AND WALLS, PRECAST SLABS, MASONRY WALLS, AND SHOTCRETE SURFACES. AN ACCEPTABLE PREPARED CONCRETE SURFACE SHOULD BE FREE OF CONTAMINANTS, LAITANCE, LOOSELY ADHERING CONCRETE, AND DUST, AND SHOULD PROVIDE A SOUND, UNIFORM SUBSTRATE SUITABLE FOR THE APPLICATION OF PROTECTIVE COATING OR LINING SYSTEMS.

B. DRYWALL--INTERIOR
MUST BE CLEAN AND DRY. ALL NAIL HEADS MUST BE SET AND SPACKLED. JOINTS MUST BE TAPED AND COVERED WITH A JOINT COMPOUND. SPACKLED NAIL HEADS AND TAPE JOINTS MUST BE SANDED SMOOTH AND ALL DUST REMOVED PRIOR TO PAINTING.

C. STEEL: STRUCTURAL, PLATE, ETC.
SHOULD BE CLEANED BY ONE OR MORE OF THE SURFACE PREPARATIONS.

D. WOOD
MUST BE CLEAN AND DRY. PRIME AND PAINT AS SOON AS POSSIBLE. KNOTS AND PITCH STREAKS MUST BE SCRAPED, SANDED, AND SPOT PRIMED BEFORE A FULL PRIMING COAT IS APPLIED. PATCH ALL NAIL HOLES AND IMPERFECTIONS WITH A WOOD FILLER OR PUTTY AND SAND SMOOTH.

E. **WARNING!** REMOVAL OF OLD PAINT BY SANDING, SCRAPING OR OTHER MEANS MAY GENERATE DUST OR FUMES THAT CONTAIN LEAD. EXPOSURE TO LEAD DUST OR FUMES MAY CAUSE BRAIN DAMAGE OR OTHER ADVERSE HEALTH EFFECTS, ESPECIALLY IN CHILDREN OR PREGNANT WOMEN. CONTROLLING EXPOSURE TO LEAD OR OTHER HAZARDOUS SUBSTANCES REQUIRES THE USE OF PROPER PROTECTIVE EQUIPMENT, SUCH AS A PROPERLY FITTED RESPIRATOR (NIOSH APPROVED) AND PROPER CONTAINMENT AND CLEANUP. FOR MORE INFORMATION, CALL THE NATIONAL LEAD INFORMATION CENTER AT 1-800-424-LEAD (IN US)OR CONTACT YOUR LOCAL HEALTH AUTHORITY.

3.2 INSTALLATION

A. APPLY ALL COATINGS AND MATERIALS WITH MANUFACTURE'S SPECIFICATIONS IN MIND. MIX ALL COATINGS ACCORDING TO MANUFACTURE'S RECOMMENDATION. DO NOT THIN PAINTS AND COATINGS UNLESS DIRECTED ACCORDING TO MANUFACTURER'S INSTRUCTIONS.

B. DO NOT APPLY TO WET OR DAMP SURFACES.

1. WAIT AT LEAST 30 DAYS BEFORE APPLYING TO NEW CONCRETE OR MASONRY. OR FOLLOW MANUFACTURER'S PROCEDURES TO APPLY APPROPRIATE COATINGS PRIOR TO 30 DAYS.
2. TEST NEW CONCRETE FOR MOISTURE CONTENT.
3. WAIT UNTIL WOOD IS FULLY DRY AFTER RAIN , FOG OR DEW.

C. APPLY COATINGS USING METHODS RECOMMENDED BY MANUFACTURER.

D. UNIFORMLY APPLY COATINGS WITHOUT RUNS, DRIPS, OR SAGS, WITHOUT BRUSH MARKS, AND WITH CONSISTENT SHEEN.

E. APPLY COATINGS AT SPREADING RATE REQUIRED TO ACHIEVE THE MANUFACTURERS RECOMMENDED DRY FILM THICKNESS.

F. REGARDLESS OF NUMBER OF COATS SPECIFIED, APPLY AS MANY COATS AS NECESSARY FOR COMPLETE HIDE, AND UNIFORM APPEARANCE.

G. INSPECTION: THE COATED SURFACE MUST BE INSPECTED AND APPROVED BY THE ARCHITECT OR ENGINEER JUST PRIOR TO EACH COAT.

3.3 PROTECTION

A. PROTECT FINISHED COATINGS FROM DAMAGE UNTIL COMPLETION OF PROJECT.

B. TOUCH-UP DAMAGED COATINGS AFTER SUBSTANTIAL COMPLETION, FOLLOWING MANUFACTURER'S RECOMMENDATION FOR TOUCH UP OR REPAIR OF DAMAGED COATINGS. REPAIR ANY DEFECTS THAT WILL HINDER THE PERFORMANCE OF THE COATINGS.

3.4 COLOR SCHEDULE

- BM MISTY GREY 2124-60 EGGSHELL
- BM MISTY GREY 2124-60 SEMIGLOSS
- BM PEWTER 2121-60 EGGSHELL
- BM MISTY GREY 2124-60 WATERBORNE ACRYLIC DRYFALL EGGSHELL
- SW CUSTOM NIKE CNC GREY
- 'ECOS' CHALKBOARD, PAINT COLOR: BLACK

3.6 PAINT SCHEDULE

A. CONCRETE - (WALLS & CEILINGS, POURED CONCRETE, PRECAST CONCRETE, UNGLAZED BRICK, CEMENT BOARD, TILT-UP, CAST-IN-PLACE)

1. LATEX SYSTEMS

a. SEMI-GLOSS FINISH
1ST COAT: S-W LOXON PRIMER, A24W08300
2ND COAT: S-W PROMAR 200 ZERO VOC SEMI-GLOSS EX WHITE, B31W02651
3RD COAT: S-W PROMAR 200 ZERO VOC SEMI-GLOSS EX WHITE, B31W02651

b. EGG-SHELL FINISH
1ST COAT: S-W LOXON PRIMER, A24W08300
2ND COAT: S-W PROMAR 200 ZERO VOC EG-SHEL EX WHITE, B20W12651
3RD COAT: S-W PROMAR 200 ZERO VOC EG-SHEL EX WHITE, B20W12651

c. FLAT FINISH
1ST COAT: S-W LOXON PRIMER, A24W08300
2ND COAT: S-W PROMAR 200 ZERO VOC FLAT EX WHITE, B30W12651
3RD COAT: S-W PROMAR 200 ZERO VOC FLAT EX WHITE, B30W12651

2. EPOXY SYSTEMS

a. SEMI-GLOSS FINISH
1ST COAT: COROTECH EPOXY MASTIC COATING V160
2ND COAT: COROTECH EPOXY MASTIC COATING V160

3. ACRYLIC SYSTEMS

a. SEMI-GLOSS FINISH
1ST COAT: TOUGH SHIELD ACRYLIC FLOOR AND PATIO COATING SATIN FINISH TS-3xxx
2ND COAT: TOUGH SHIELD ACRYLIC FLOOR AND PATIO COATING SATIN FINISH TS-3xxx

B. MASONRY - (CMU - CONCRETE, SPLIT FACE, SCORED, SMOOTH, HIGH DENSITY, LOW DENSITY, FLUTED)

1. LATEX SYSTEMS

a. SEMI-GLOSS FINISH
1ST COAT: S-W PREPRITE BLOCK FILLER, B51W620
2ND COAT: S-W PROMAR 200 ZERO VOC SEMI-GLOSS EX WHITE, B31W02651
3RD COAT: S-W PROMAR 200 ZERO VOC SEMI-GLOSS EX WHITE, B31W02651

b. EGG-SHELL FINISH
1ST COAT: S-W PREPRITE BLOCK FILLER, B51W620
2ND COAT: S-W PROMAR 200 ZERO VOC EG-SHEL EX WHITE, B20W12651
3RD COAT: S-W PROMAR 200 ZERO VOC EG-SHEL EX WHITE, B20W12651

c. FLAT FINISH
1ST COAT: S-W PREPRITE BLOCK FILLER, B51W620
2ND COAT: S-W PROMAR 200 ZERO VOC FLAT EX WHITE, B30W12651
3RD COAT: S-W PROMAR 200 ZERO VOC FLAT EX WHITE, B30W12651

2. LATEX SYSTEMS

a. GLOSS FINISH
1ST COAT: INSL-X PRIME ALL MULTI-SURFACE LATEX PRIMER SEALER AP-1000
2ND COAT: ULTRA SPEC HP D.T.M. ACRYLIC GLOSS ENAMEL HP28
3RD COAT: ULTRA SPEC HP D.T.M. ACRYLIC GLOSS ENAMEL HP28

b. EGG-SHELL FINISH
1ST COAT: SUPER HIDE ZERO VOC INTERIOR LATEX EGGESHLL 357
2ND COAT: SUPER HIDE ZERO VOC INTERIOR LATEX EGGESHLL 357

SECTION 09900 - PAINTING (CONTINUED)

C. FERROUS AND NON-FERROUS METAL - (STRUCTURAL STEEL COLUMNS, JOISTS, TRUSSES, BEAMS, MISCELLANEOUS & ORNAMENTAL IRON, STRUCTURAL IRON, FERROUS METAL)

1. LATEX SYSTEMS

a. SEMI-GLOSS FINISH
1ST COAT: S-W PRO INDUSTRIAL PRO-CRYL UNIVERSAL PRIMER, B66-310
2ND COAT: S-W PROMAR 200 ZERO VOC SEMI-GLOSS EX WHITE, B31W02651
3RD COAT: S-W PROMAR 200 ZERO VOC SEMI-GLOSS EX WHITE, B31W02651

b. EGG-SHELL FINISH
1ST COAT: S-W PRO INDUSTRIAL PRO-CRYL UNIVERSAL PRIMER, B66-310
2ND COAT: S-W PROMAR 200 ZERO VOC EG-SHEL EX WHITE, B20W12651
3RD COAT: S-W PROMAR 200 ZERO VOC EG-SHEL EX WHITE, B20W12651

c. FLAT FINISH
1ST COAT: S-W PRO INDUSTRIAL PRO-CRYL UNIVERSAL PRIMER, B66-310
2ND COAT: S-W PROMAR 200 ZERO VOC FLAT EX WHITE, B30W12651
3RD COAT: S-W PROMAR 200 ZERO VOC FLAT EX WHITE, B30W12651

2. ACRYLIC SYSTEMS

a. SEMI-GLOSS FINISH
1ST COAT: ULTRA SPEC HP ACRYLIC METAL PRIMER HP04
2ND COAT: ULTRA SPEC HP D.T.M. ACRYLIC SEMI-GLOSS ENAMEL HP29
3RD COAT: ULTRA SPEC HP D.T.M. ACRYLIC SEMI-GLOSS ENAMEL HP29

3. LATEX SYSTEMS

a. SEMI-GLOSS FINISH
1ST COAT: ULTRA SPEC HP ACRYLIC METAL PRIMER HP04
2ND COAT: SUPER HIDE ZERO VOC INTERIOR LATEX SEMI-GLOSS 358
3RD COAT: SUPER HIDE ZERO VOC INTERIOR LATEX SEMI-GLOSS 358

b. EGG-SHELL FINISH
1ST COAT: ULTRA SPEC HP ACRYLIC METAL PRIMER HP04
2ND COAT: SUPER HIDE ZERO VOC INTERIOR LATEX EGGSHELL 357
3RD COAT: SUPER HIDE ZERO VOC INTERIOR LATEX EGGSHELL 357

c. DRYFALL FLAT FINISH
1ST COAT: LATEX DRYFALL FLAT 395

d. DRYFALL FLAT FINISH
1ST COAT: ULTRA SPEC HP ACRYLIC METAL PRIMER HP04
2ND COAT: LATEX DRYFALL FLAT 395

4. EPOXY SYSTEMS

a. SEMI-GLOSS FINISH
1ST COAT: COROTECH POLYAMIDE EPOXY PRIMER V150
2ND COAT: COROTECH WATERBORNE AMINE EPOXY V440

b. SEMI-GLOSS FINISH
1ST COAT: COROTECH POLYAMIDE EPOXY PRIMER V150
2ND COAT: COROTECH ACRYLIC EPOXY V450 SEMI-GLOSS

D. WOOD- (DOORS, TRIM, CABINET WORK, PARTITIONS, FRAMES)

1. LATEX SYSTEMS

a. SEMI-GLOSS FINISH
LOW ODOR/ZERO VOC
1ST COAT: S-W PREPRITE PROBLOCK LATEX PRIMER, B51W620
2ND COAT: S-W PROMAR 200 ZERO VOC SEMI-GLOSS EX WHITE, B31W02651
3RD COAT: S-W PROMAR 200 ZERO VOC SEMI-GLOSS EX WHITE, B31W02651

b. EGG-SHELL FINISH
LOW ODOR/ZERO VOC
1ST COAT: S-W PREPRITE PROBLOCK LATEX PRIMER, B51W620
2ND COAT: S-W PROMAR 200 ZERO VOC EG-SHEL EX WHITE, B20W12651
3RD COAT: S-W PROMAR 200 ZERO VOC EG-SHEL EX WHITE, B20W12651

2. LATEX SYSTEMS

a. SEMI-GLOSS FINISH
1ST COAT: ULTRA SPEC 500 INTERIOR LATEX PRIMER N534
2ND COAT: SUPER HIDE ZERO VOC INTERIOR LATEX SEMI-GLOSS 358
3RD COAT: SUPER HIDE ZERO VOC INTERIOR LATEX SEMI-GLOSS 358

3. TRANSPARTENT SEALER
1ST COAT: LENMAR RAPID SEAL DUAL PURPOSE SEALER 1Y.519

E. WOOD- (EXPOSE LAMINATED WOOD ROOF STRUCTURE)

1. LATEX SYSTEMS

a. SEMI-GLOSS FINISH
1ST COAT: INSL-X PRIM ALL MULTI SURFACE LATEX PRIMER SEALER AP-1000
2ND COAT: SUPER HIDE ZERO VOC INTERIOR LATEX SEMI-GLOSS 358
3RD COAT: SUPER HIDE ZERO VOC INTERIOR LATEX SEMI-GLOSS 358

F. DRYWALL (WALLS, CEILINGS, GYPSUM BOARD, WOOD PULP BOARD, PLASTER BOARD, ETC.)

1. LATEX SYSTEMS

a. SEMI-GLOSS FINISH
1ST COAT: S-W PROMAR 200 ZERO VOC INTERIOR LATEX PRIMER B28W600
2ND COAT: S-W PROMAR 200 ZERO VOC SEMI-GLOSS EX WHITE, B31W02651
3RD COAT: S-W PROMAR 200 ZERO VOC SEMI-GLOSS EX WHITE, B31W02651

b. EGG-SHELL FINISH
1ST COAT: S-W PROMAR 200 ZERO VOC INTERIOR LATEX PRIMER B28W600
2ND COAT: S-W PROMAR 200 ZERO VOC EGG-SHEL EX WHITE, B20W12651
3RD COAT: S-W PROMAR 200 ZERO VOC EGG-SHEL EX WHITE, B20W12651

c. FLAT FINISH
1ST COAT: S-W PROMAR 200 ZERO VOC INTERIOR LATEX PRIMER B28W600
2ND COAT: S-W PROMAR 200 ZERO VOC FLAT EX WHITE, B30W12651
3RD COAT: S-W PROMAR 200 ZERO VOC FLAT EX WHITE, B30W12651

d. DRYWALL PRIMER - SHERWIN WILLIAMS PVA DRYWALL PRIMER & SEALER WHITE

2. LATEX SYSTEMS

a. SEMI-GLOSS FINISH
1ST COAT: SUPER HIDE ZERO VOC INTERIOR LATEX PRIMER 354
2ND COAT: SUPER HIDE ZERO VOC INTERIOR LATEX SEMI-GLOSS 358
3RD COAT: SUPER HIDE ZERO VOC INTERIOR LATEX SEMI-GLOSS 358

b. EGG-SHELL FINISH
1ST COAT: SUPER HIDE ZERO VOC INTERIOR LATEX PRIMER 354
2ND COAT: SUPER HIDE ZERO VOC INTERIOR LATEX EGGSHELL 357
3RD COAT: SUPER HIDE ZERO VOC INTERIOR LATEX EGGSHELL 357

c. GLOSS FINISH
1ST COAT: SUPER HIDE ZERO VOC INTERIOR LATEX PRIMER 354
2ND COAT: ULTRA SPEC HP D.T.M. ACRYLIC GLOSS ENAMEL HP28
3RD COAT: ULTRA SPEC HP D.T.M. ACRYLIC GLOSS ENAMEL HP28

G. ALTERNATE PAINT FOR DEEP AND ULTRADEEP BASE

1. PROMAR 200 ZERO VOC INTERIOR LATEX EGG-SHEL DEEP BASE, B20W02653
2. PROMAR 200 ZERO VOC INTERIOR LATEX EGG-SHEL ULTRADEEP BASE, B20T02654

H. DRYFALL WATERBORNE TOPCOATS

1. SW WATERBORNE ACRYLIC DRY FALL B42W181
PRIMER: SPECIFIC TO SUBSTRATE

Architect:

brr

ARCHITECT OF RECORD:
BRR ARCHITECTURE, INC
8131 METCALF AVE
SUITE 300
OVERLAND PARK, KS 66204

www.brrarch.com

TEL: 913-262-9095
FAX: 913-262-9044

COPYRIGHT NOTICE

This drawing was prepared for use on a specific site contemporaneously with its issue date and it is not suitable for use on a different project site or at a later time. Use of this drawing for reference or example on another project requires the services of properly licensed architects and engineers. Reproduction of this drawing for reuse on another project is not authorized and may be contrary to the law.

Engineer:

Project Owner:

NIKE, Inc.
One Bowerman Drive
Beaverton, OR 97005
(503) 671-6453
www.nike.com

Project Address:

NIKE FACTORY STORE
WATERFORD LAKES
SHOPPING CENTER
449 N. ALAFAYA TRAIL
ORLANDO, FL 32828
TEMPLATE ISSUE DATE: 11/28/2018

Fixture Package:
UNITE

Stamp:
NOT FOR CONSTRUCTION

Issued For:
PERMIT/BID

Issue Date:
11/06/2020

Revisions:

NO.	REASON	DATE

PROJECT MANAGER:
KH
CHECKED BY:
DRAWN BY:
RAN

Project Number:
62301411

Sheet Title:
ARCHITECTURAL SPECIFICATIONS

Sheet Number:
AS8.0

SECTION 09980 - FRP WALL PANELS

PART 1 - GENERAL

1.1 SUMMARY

A. THIS SECTION INCLUDES THE FOLLOWING TYPES OF WALL PROTECTION SYSTEMS:

1. WALL PANELS

B. RELATED SECTIONS: THE FOLLOWING SECTIONS CONTAIN REQUIREMENTS RELATED TO THIS SECTION:

1. HANDRAILS, BUMPER GUARDS, CRASH RAILS, CORNER GUARDS, ACCENT RAILS, WALL COVERING, DOOR PROTECTION; REFER TO SECTION 10 26 00 "WALL AND DOOR PROTECTION"

1.2 REFERENCES

A. NATIONAL CODES (IBC, UBC, SBCCI, BOCA AND LIFE SAFETY)

B. AMERICAN SOCIETY FOR TESTING AND MATERIALS (ASTM)

C. UNDERWRITERS LABORATORIES (UL)

D. GREENGUARD GOLD

E. CALIFORNIA DEPARTMENT OF PUBLIC HEALTH (CDPH) STANDARD METHOD V1.1

1.3 SUBMITTALS

A. SUBMIT ALL REQUIRED LEED DOCUMENTATION FOR MANDATORY AND DESIRABLE CREDITS NOTED IN PARAGRAPH 1.5 PER THE SUBMITTAL REQUIREMENTS, OUTLINED IN SECTION 01352.

RELATED LEED® CREDITS
LOW-EMITTING MATERIALS

BUILDING PRODUCT DISCLOSURE AND OPTIMIZATION- SOURCING OF RAW MATERIALS -OPTION 2– LEADERSHIP EXTRACTION PROCESSES

BUILDING PRODUCT DISCLOSURE AND OPTIMIZATION

B. PRODUCT DATA AND DETAILED SPECIFICATIONS FOR EACH SYSTEM COMPONENT AND INSTALLATION ACCESSORY REQUIRED, INCLUDING INSTALLATION METHODS FOR EACH TYPE OF SUBSTRATE.

C. SHOP DRAWINGS SHOWING LOCATIONS, EXTENT AND INSTALLATION DETAILS OF WALL PANEL PRODUCTS.

D. SAMPLES FOR VERIFICATION PURPOSES: SUBMIT THE FOLLOWING SAMPLES, AS PROPOSED FOR THIS WORK, FOR VERIFICATION OF COLOR, TEXTURE, PATTERN AND THICKNESS:

1. SAMPLE OF EACH PRODUCT SPECIFIED.

E. PRODUCT TEST REPORTS FROM A QUALIFIED INDEPENDENT TESTING LABORATORY SHOWING COMPLIANCE OF EACH COMPONENT WITH REQUIREMENTS INDICATED.

F. MAINTENANCE DATA FOR WALL PROTECTION SYSTEM COMPONENTS FOR INCLUSION IN THE OPERATING AND MAINTENANCE MANUALS SPECIFIED IN DIVISION 1.

1.4 QUALITY ASSURANCE

A. INSTALLER QUALIFICATIONS: ENGAGE AN INSTALLER WHO HAS NO LESS THAN 3 YEARS EXPERIENCE IN INSTALLATION OF WALL PANELS SIMILAR IN COMPLEXITY TO THOSE REQUIRED FOR THIS PROJECT.

B. MANUFACTURER'S QUALIFICATIONS: NOT LESS THAN 5 YEARS EXPERIENCE IN THE PRODUCTION OF SPECIFIED PRODUCTS AND A RECORD OF SUCCESSFUL PERFORMANCE.

C. CODE COMPLIANCE: ASSEMBLIES SHOULD CONFORM TO ALL APPLICABLE CODES INCLUDING IBC, UBC, SBCCI, BOCA AND LIFE SAFETY.

D. FIRE PERFORMANCE CHARACTERISTICS: PROVIDE WALL PANELS WITH A UL LABEL INDICATING THAT THEY ARE IDENTICAL TO THOSE TESTED IN ACCORDANCE WITH ASTM-E84 (CAN/ULC S102.2) FOR CLASS 1 CHARACTERISTICS LISTED BELOW:

1. FLAME SPREAD 25 OR LESS

2. SMOKE DEVELOPED: 450 OR LESS

E. CHEMICAL AND STAIN RESISTANCE: PROVIDE WALL PANELS WITH CHEMICAL AND STAIN RESISTANCE IN ACCORDANCE WITH ASTM D-1308.

F. COLOR MATCH: PROVIDE WALL PANELS THAT ARE COLOR MATCHED IN ACCORDANCE WITH THE FOLLOWING:

1. DELTA ECMC OF NO GREATER THAN 1.0 USING CIELAB COLOR SPACE. COMPONENTS OF THE WALL PROTECTION SYSTEM MANUFACTURED BY THE SAME COMPANY TO ENSURE COMPATIBILITY OF COLOR, TEXTURE AND PHYSICAL PROPERTIES.

G. SINGLE SOURCE RESPONSIBILITY: PROVIDE ALL COMPONENTS OF THE WALL PROTECTION SYSTEM MANUFACTURED BY THE SAME COMPANY TO ENSURE COMPATIBILITY OF COLOR, TEXTURE AND PHYSICAL PROPERTIES.

1.5 DELIVERY, STORAGE AND HANDLING

A. DELIVER MATERIALS TO THE PROJECT SITE IN UNOPENED PACKAGING CLEARLY LABELED TO SHOW MANUFACTURER.

B. STORE MATERIALS IN ORIGINAL, UNDAMAGED PACKAGING IN A CLEAN, DRY PLACE OUT OF DIRECT SUNLIGHT AND EXPOSURE TO THE ELEMENTS. A ROOM TEMPERATURE OF 40-100ºF (4-38ºC) SHOULD BE MAINTAINED.

C. MATERIALS MUST BE STORED FLAT.

1.6 PROJECT CONDITIONS

A. MATERIALS MUST BE ACCLIMATED IN AN ENVIRONMENT OF 65-75ºF (18-24ºC) FOR AT LEAST 24 HOURS PRIOR TO BEGINNING THE INSTALLATION.

B. INSTALLATION AREAS MUST BE ENCLOSED AND WEATHERPROOFED BEFORE INSTALLATION COMMENCES.

SECTION 09980 - FRP WALL PANELS (CONTINUED)

PART 2 - PRODUCTS

2.1 MANUFACTURERS

A. INTERIOR SURFACE PROTECTION PRODUCTS SPECIFIED HEREIN AND INSTALLED ON THE SUBMITTAL DRAWINGS SHALL BE MANUFACTURED BY CRANE COMPOSITES - SEQUENTIA.

2.2 MATERIALS

A. WALL PANELS TO BE CLASS A 48 GREY - BY CRANE COMPOSITES - SEQUENTIA. WALL PANELS TO BE MANUFACTURED .09" EMBOSSED THICK FACTORY BONDED. THE BACKSIDE OF THE PANEL TO BE LAMINATED WITH A MOISTURE RESISTANT SHEET.

2.3 WALL PANEL MOUNTING OPTIONS

A. ADHESIVE: TITEBOND FAST GRAB FRP ADHESIVE

2.4 FABRICATION

A. GENERAL: FABRICATE WALL PANELS TO COMPLY WITH REQUIREMENTS INDICATED FOR DESIGN, DIMENSIONS, DETAIL, FINISH AND SIZES. ALL BASED UPON REQUIRED FIELD VERIFIED DIMENSIONS.

2.5 ACCESSORIES

A. WALL WAINSCOT SHALL BE FURNISHED AS A COMPLETE PACKAGED SYSTEM WITH MANUFACTURED TRIM AT TOP EXPOSED EDGE.

PART 3 - EXECUTION

3.1 EXAMINATION

A. VERIFICATION OF CONDITIONS: EXAMINE AREAS AND CONDITIONS UNDER WHICH WORK IS TO BE PERFORMED AND IDENTIFY CONDITIONS DETRIMENTAL TO PROPER OR TIMELY COMPLETION.

1. DO NOT PROCEED UNTIL UNSATISFACTORY CONDITIONS HAVE BEEN CORRECTED.

3.2 PREPARATION

A. SURFACE PREPARATION: PRIOR TO INSTALLATION, CLEAN SUBSTRATE TO REMOVE DIRT, DEBRIS AND LOOSE PARTICLES. PERFORM ADDITIONAL PREPARATION PROCEDURES AS REQUIRED BY MANUFACTURER'S INSTRUCTIONS.

B. PROTECTION: TAKE ALL NECESSARY STEPS TO PREVENT DAMAGE TO MATERIAL DURING INSTALLATION AS REQUIRED IN MANUFACTURER'S INSTALLATION INSTRUCTIONS.

3.3 INSTALLATION

A. INSTALL THE WORK OF THIS SECTION IN STRICT ACCORDANCE WITH THE MANUFACTURER'S RECOMMENDATIONS AND THE REQUIRED FIELD VERIFIED DIMENSIONS.

B. TEMPERATURE AT THE TIME OF INSTALLATION MUST BE BETWEEN 65-75ºF (18-24ºC) AND BE MAINTAINED FOR AT LEAST 48 HOURS AFTER THE INSTALLATION TO ALLOW FOR PROPER ADHESIVE SET UP.

C. RELATIVE HUMIDITY SHALL NOT EXCEED 80%.

D. DO NOT EXPOSE WALL PANELS TO DIRECT SUNLIGHT DURING OR AFTER INSTALLATION. THIS WILL CAUSE THE SURFACE TEMPERATURE TO RISE, WHICH IN TURN WILL CAUSE BUBBLES AND DELAMINATION.

3.4 CLEANING

A. GENERAL: IMMEDIATELY UPON COMPLETION OF INSTALLATION, CLEAN WALL PANELS AND ACCESSORIES IN ACCORDANCE WITH MANUFACTURER'S RECOMMENDED CLEANING METHOD.

B. REMOVE SURPLUS MATERIALS, RUBBISH AND DEBRIS RESULTING FROM INSTALLATION AS WORK PROGRESSES AND UPON COMPLETION OF WORK.

3.5 PROTECTION

A. PROTECT INSTALLED MATERIALS TO PREVENT DAMAGE BY OTHER TRADES. USE MATERIALS THAT MAY BE EASILY REMOVED WITHOUT LEAVING RESIDUE OR PERMANENT STAINS.

SECTION 10260 - WALL PROTECTION

PART 1 - GENERAL

1.1 SUMMARY

A. THIS SECTION INCLUDES THE FOLLOWING TYPES OF WALL PROTECTION SYSTEMS:

1. CORNER GUARDS

B. RELATED SECTIONS: THE FOLLOWING SECTIONS CONTAIN REQUIREMENTS RELATED TO THIS SECTION:

1. HANDRAILS, BUMPER GUARDS, CRASH RAILS, ACCENT RAILS, WALL COVERING, WALL PANELS, DOOR PROTECTION; REFER TO SECTION 10 26 00 "WALL AND DOOR PROTECTION"

2. BLOCKING IN WALLS FOR FASTENERS; REFER TO SECTION 09 22 00 "SUPPORTS FOR PLASTER AND GYPSUM BOARD"

1.2 REFERENCES

A. NATIONAL CODES (IBC, UBC, SBCCI, BOCA AND LIFE SAFETY)

B. AMERICAN SOCIETY FOR TESTING AND MATERIALS (ASTM)

C. UNDERWRITERS LABORATORIES (UL)

D. CALIFORNIA DEPARTMENT OF PUBLIC HEALTH (CDPH) STANDARD METHOD V1.1

1.3 SUBMITTALS

A. SUBMIT ALL REQUIRED LEED DOCUMENTATION FOR MANDATORY AND DESIRABLE CREDITS NOTED IN PARAGRAPH 1.3 PER THE SUBMITTAL REQUIREMENTS, OUTLINED IN SECTION 01352.

RELATED LEED® CREDITS
BUILDING PRODUCT DISCLOSURE AND OPTIMIZATION- SOURCING OF RAW MATERIALS -OPTION 2– LEADERSHIP EXTRACTION PROCESSES

LOW-EMITTING MATERIALS

B. PRODUCT DATA AND DETAILED SPECIFICATIONS FOR EACH SYSTEM COMPONENT AND INSTALLATION ACCESSORY REQUIRED, INCLUDING INSTALLATION METHODS FOR EACH TYPE OF SUBSTRATE.

C. SHOP DRAWINGS SHOWING LOCATIONS, EXTENT AND INSTALLATION DETAILS OF CORNER GUARDS. SHOW METHODS OF ATTACHMENT TO ADJOINING CONSTRUCTION.

D. SAMPLES FOR VERIFICATION PURPOSES: SUBMIT THE FOLLOWING SAMPLES, AS PROPOSED FOR THIS WORK, FOR VERIFICATION OF COLOR, TEXTURE, PATTERN AND END CAP ATTACHMENT AND ALIGNMENT.

1. 12" (304.8MM) LONG SAMPLE OF EACH MODEL SPECIFIED INCLUDING END CAP AND MOUNTING HARDWARE.

E. PRODUCT TEST REPORTS FROM A QUALIFIED INDEPENDENT TESTING LABORATORY SHOWING COMPLIANCE OF EACH COMPONENT WITH REQUIREMENTS INDICATED.

F. MAINTENANCE DATA FOR WALL PROTECTION SYSTEM COMPONENTS FOR INCLUSION IN THE OPERATING AND MAINTENANCE MANUALS SPECIFIED IN DIVISION 1.

1.4 QUALITY ASSURANCE

A. INSTALLER QUALIFICATIONS: ENGAGE AN INSTALLER WHO HAS NO LESS THAN 3 YEARS EXPERIENCE IN INSTALLATION OF SYSTEMS SIMILAR IN COMPLEXITY TO THOSE REQUIRED FOR THIS PROJECT.

B. MANUFACTURER'S QUALIFICATIONS: NOT LESS THAN 5 YEARS EXPERIENCE IN THE PRODUCTION OF SPECIFIED PRODUCTS AND A RECORD OF SUCCESSFUL IN-SERVICE PERFORMANCE.

C. CODE COMPLIANCE: ASSEMBLIES SHOULD CONFORM TO ALL APPLICABLE CODES INCLUDING IBC, UBC, SBCCI, BOCA, LIFE SAFETY AND CA 01350.

D. FIRE PERFORMANCE CHARACTERISTICS: PROVIDE WALL PROTECTION SYSTEM COMPONENTS WITH UL LABEL INDICATING THAT THEY ARE IDENTICAL TO THOSE TESTED IN ACCORDANCE WITH ASTM-E84 FOR CLASS 1 CHARACTERISTICS LISTED BELOW:

1. FLAME SPREAD: 25 OR LESS

2. SMOKE DEVELOPED: 450 OR LESS

E. IMPACT STRENGTH: PROVIDE ASSEMBLED WALL PROTECTION UNITS THAT HAVE BEEN TESTED IN ACCORDANCE WITH THE APPLICABLE PROVISIONS OF ASTM F476.

F. CHEMICAL AND STAIN RESISTANCE: PROVIDE WALL PROTECTION SYSTEM COMPONENTS WITH CHEMICAL AND STAIN RESISTANCE IN ACCORDANCE WITH ASTM D-1308.

G. COLOR MATCH: PROVIDE WALL PROTECTION COMPONENTS THAT ARE COLOR MATCHED IN ACCORDANCE WITH A DELTA ECMC OF NO GREATER THAN 1.0 USING CIELAB COLOR SPACE.

H. SINGLE SOURCE RESPONSIBILITY: PROVIDE ALL COMPONENTS OF THE WALL PROTECTION SYSTEM MANUFACTURED BY THE SAME COMPANY TO ENSURE COMPATIBILITY OF COLOR, TEXTUREAND PHYSICAL PROPERTIES.

1.5 DELIVERY, STORAGE AND HANDLING

A. DELIVER MATERIALS TO THE PROJECT SITE IN UNOPENED ORIGINAL FACTORY PACKAGING CLEARLY LABELED TO SHOW MANUFACTURER.

B. STORE MATERIALS IN ORIGINAL, UNDAMAGED PACKAGING IN A COOL, DRY PLACE OUT OF DIRECT SUNLIGHT AND EXPOSURE TO THE ELEMENTS. A MINIMUM ROOM TEMPERATURE OF 40°F (4°C) AND A MAXIMUM OF 100°F (38°C) SHOULD BE MAINTAINED.

C. MATERIAL MUST BE STORED FLAT.

SECTION 10260 - WALL PROTECTION (CONTINUED)

1.6 PROJECT CONDITIONS

A. MATERIALS MUST BE ACCLIMATED IN AN ENVIRONMENT OF 65°-75°F (18°-24°C) FOR AT LEAST 24 HOURS PRIOR TO BEGINNING THE INSTALLATION.

B. INSTALLATION AREAS MUST BE ENCLOSED AND WEATHERPROOFED BEFORE INSTALLATION COMMENCES.

PART 2 - PRODUCT

2.1 MANUFACTURERS

A. INTERIOR SURFACE PROTECTION PRODUCTS SPECIFIED HEREIN AND INSTALLED ON THE SUBMITTAL DRAWINGS SHALL BE MANUFACTURED BY BURNS MANUFACTURING, INC.

2.2 MATERIALS

A. 0.050 ALUMINUM BRASS BRONZE STAINLESS STEEL: CONSULT FACTORY FOR COLOR SELECTION.

B. FASTENERS:

SCREW MOUNT/SPECIFY 310S#6 X 1-1/4" SMS.
TAPE MOUNT/SPECIFY 310T - 3M SCOTCH MOUNT ADHESIVE TAPE.
BLACK/SPECIFY 310B - NO HOLES NO TAPE-ADHESIVE BY OTHERS.

2.3 CORNER GUARDS

A. 2" X 2" X 48" CORNER GUARDS TO BE PART #311 BY BURNS MANUFACTURING INC.

2.4 FABRICATION

A. GENERAL: FABRICATE WALL PROTECTION SYSTEMS TO COMPLY WITH REQUIREMENTS INDICATED FOR DESIGN, DIMENSIONS, DETAIL, FINISH AND MEMBER SIZES.

PART 3 - EXECUTION

3.1 EXAMINATION

A. VERIFICATION OF CONDITIONS: EXAMINE AREAS AND CONDITIONS UNDER WHICH WORK IS TO BE PERFORMED AND IDENTIFY CONDITIONS DETRIMENTAL TO PROPER OR TIMELY COMPLETION.

1. DO NOT PROCEED UNTIL UNSATISFACTORY CONDITIONS HAVE BEEN CORRECTED.

3.2 PREPARATION

A. SURFACE PREPARATION: PRIOR TO INSTALLATION, CLEAN SUBSTRATE TO REMOVE DIRT, DEBRIS AND LOOSE PARTICLES. PERFORM ADDITIONAL PREPARATION PROCEDURES AS REQUIRED BY MANUFACTURER'S INSTRUCTIONS.

B. PROTECTION: TAKE ALL NECESSARY STEPS TO PREVENT DAMAGE TO MATERIAL DURING INSTALLATION AS REQUIRED IN MANUFACTURER'S INSTALLATION INSTRUCTIONS.

3.3 INSTALLATION

A. INSTALL THE WORK OF THIS SECTION IN STRICT ACCORDANCE WITH THE MANUFACTURER'S RECOMMENDATIONS, USING ONLY APPROVED MOUNTING HARDWARE, AND LOCATING ALL COMPONENTS FIRMLY INTO POSITION, LEVEL AND PLUMB.

B. TEMPERATURE AT THE TIME OF INSTALLATION MUST BE BETWEEN 65°-75°F (18°-24°C) AND BE MAINTAINED FOR AT LEAST 48 HOURS AFTER THE INSTALLATION.

C. ADJUST INSTALLED END CAPS AS NECESSARY TO ENSURE TIGHT SEAMS.

3.4 CLEANING

A. GENERAL: IMMEDIATELY UPON COMPLETION OF INSTALLATION, CLEAN GUARDS AND ACCESSORIES IN ACCORDANCE WITH MANUFACTURER'S RECOMMENDED CLEANING METHOD.

B. REMOVE SURPLUS MATERIALS, RUBBISH AND DEBRIS RESULTING FROM INSTALLATION AS WORK PROGRESSES AND UPON COMPLETION OF WORK.

3.5 PROTECTION

A. PROTECT INSTALLED MATERIALS TO PREVENT DAMAGE BY OTHER TRADES. USE MATERIALS THAT MAY BE EASILY REMOVED WITHOUT LEAVING RESIDUE OR PERMANENT STAINS.

SECTION 11176 - RECYCLING EQUIPMENT

PART 1 - GENERAL

1.1 SUBMITTALS

A. PROVIDE SIGNAGE AND LABELING AT RECYCLING AREAS.

PART 2 - PRODUCTS

2.1 INDOOR RECYCLING BINS

A. COUNTER HEIGHT RECYCLING BINS: 96 GALLON UNIVERSAL RECYCLING CART

B. HAZARDOUS WASTE AND BATTERY COLLECTION REQUIRES A SEPARATE AREA OF DEDICATED STORAGE

2.2 OUTDOOR RECYCLING RECEPTACLES

A. CURBSIDE BINS: RECYCLED-CONTENT PLASTIC

2.3 MANUFACTURERS:

A. CASCADE UNIVERSAL 96-GALLON CART, TELEPHONE: (800) 968-2278, ADDRESS: 4950 37TH STREET S.E., GRAND RAPIDS, MI 49512

Architect:

brr

ARCHITECT OF RECORD:
BRR ARCHITECTURE, INC
8131 METCALF AVE
SUITE 300
OVERLAND PARK, KS 66204

www.brrarch.com

TEL: 913-262-9095
FAX: 913-262-9044

COPYRIGHT NOTICE

This drawing was prepared for use on a specific site contemporaneously with its issue date and it is not suitable for use on a different project site or at a later time. Use of this drawing for another project or on another project requires the services of properly licensed architects and engineers. Reproduction of this drawing for reuse on another project is not authorized and may be contrary to the law.

Engineer:

Project Owner:

NIKE, Inc.
One Bowerman Drive
Beaverton, OR 97005
(503) 671-6453
www.nike.com

Project Address:

NIKE FACTORY STORE
WATERFORD LAKES
SHOPPING CENTER
449 N. ALAFAYA TRAIL
ORLANDO, FL 32828
TEMPLATE ISSUE DATE: 11/28/2018

Fixture Package:

UNITE

Stamp:

NOT FOR CONSTRUCTION

Issued For:

PERMIT/BID

Issue Date:

11/06/2020

Revisions:

NO.	REASON	DATE

PROJECT MANAGER:
KH

CHECKED BY:

DRAWN BY:
RAN

Project Number:

62301411

Sheet Title:

ARCHITECTURAL SPECIFICATIONS

Sheet Number:

AS9.0

BUILDING AUTOMATION SYSTEM

WATERFORD LAKES SHOPPING CENTER
NIKE FACTORY STORE - TBD

449 N. ALAFAYA TRAIL

ORLANDO, FL 32828

COMFORT SYSTEMS USA EMS PROJECT MANAGEMENT

JEAN OSKINS - PROJECT MANAGER

EMAIL: JEAN.OSKINS@COMFORTSYSTEMSUSA.COM
PHONE: 317-246-4278

GENERAL NEW CONSTRUCTION NOTES

THE DRAWINGS IN THIS SET ARE BASED ON THE MECHANICAL AND ELECTRICAL DRAWINGS ISSUED FOR BID AND/OR CONSTRUCTION. ALL MOUNTING LOCATIONS, MOUNTING HEIGHTS AND SCHEDULES (MECHANICAL AND ELECTRICAL) ARE TO BE VERIFIED WITH LATEST SET OF ELECTRICAL AND MECHANICAL DRAWINGS. IF INTENT OF DESIGN IS NOT CLEAR, CONTACT BAS CONTACT BELOW FOR CLARIFICATION.

THE BAS INSTALLING CONTRACTOR (GC OR EC OR MC SUPPLIED CONTRACTOR) SHALL FURNISH THE LABOR, WIRE AND INSTALLATION MATERIALS REQUIRED TO PROVIDE A ROUGHED-IN AND TERMINATED BAS SYSTEM AS SHOWN IN THE DRAWINGS AND INSTALLATION DOCUMENTATION PROVIDED BY THE BAS VENDOR WITH THE BAS EQUIPMENT PACKAGE (SEE BOM).

COMFORT SYSTBAS USA (CSUSA) DOES NOT PERFORM ANY OF THE BAS INSTALLATION. CSUSA ONLY PERFORMS START-UP (COMMISSIONING) OF THE BAS SYSTEM.

INSTALLING CONTRACTOR WILL NEED TO COORDINATE WORK WITH EITHER THE MECHANICAL AND/OR ELECTRICAL CONTRACTOR TO GET ALL THE BAS EQUIPMENT INSTALLED.

SEE LEGEND FOR WIRE SPECS. IF WRONG WIRE IS PULLED, INSTALLING CONTRACTOR WILL BE REQUIRED TO RE-PULL THE SPECIFIED WIRE.

ANY LOST TIME WILL BE BILLED TO BAS CONTRACT HOLDING CONTRACTOR AT A RATE OF $1500.00 DOLLARS A DAY.

ENERGY MANAGEMENT LOW VOLTAGE CONDUIT SPECS:

- ONLY REQUIRED IF LOCAL CODE REQUIRES OR IF ELECTRICAL DRAWINGS SPECIFY LOW VOLTAGE WIRE RAN IN CONDUIT.
- FIELD VERIFY ALL BAS CONDUIT SIZES BASED ON ENERGY MANAGEMENT SYSTEM SINGLE LINE DIAGRAM.
- MULTIPLE ENERGY MANAGEMENT SYSTEM WIRES CAN BE PULLED IN THE SAME CONDUIT IF FIELD CONDITIONS PERMIT.
- ENERGY MANAGEMENT SYSTEM WIRE PULLS SHOWN !!!!CANNOT!!!! BE PULLED IN SAME CONDUIT AS LINE OR HIGH VOLTAGE.
- FALLOW ALL CONDUIT GUIDE LINES AS DESCRIBED IN THE ELECTRICAL DRAWINGS

ALL WIRES SHALL BE LABELED LEGIBLY

DRAWING LIST

1.1 BAS RISER NOTES AND INSTALL CHECK-OFF
1.2 BAS SINGLE LINE RISER DIAGRAM
1.3 BAS COMMUNICATION RISER DIAGRAM

2.1A BAS WESCO GEAR MAIN CONTROL BACKPLATE
2.1B BAS WESCO GEAR BACKPLATE ENLARGED VIEW
2.1C BAS WESCO GEAR BACKPLATE ENLARGED VIEW
2.2 BAS MAIN CONTROL BACKPLATE I/O DETAILS
2.3 BAS MAIN CONTROL BACKPLATE I/O DETAILS

3.1 GENERIC WATTSTOPPER SYSTEM WIRING DETAILS

4.1 CARRIER RTU OPEN INTERFACE DETAILS
4.2 CARRIER SYSTEM VU INTERFACE DETAILS
4.3 PRICE MODULATING DIFFUSER INTERFACE DETAILS

5.1 DENT KW METER INTERFACE DETAILS
5.2 DENT KW METER SOFTWARE SETUP DETAILS

6.1 MISCELLANEOUS BACNET DEVICE INTERFACE DETAILS

7.0 BAS BILL OF MATERIAL

8.1 BAS SEQUENCE OF OPERATION
8.2 BAS SEQUENCE OF OPERATION

BAS APPENDIX

MECHANICAL AND ELECTRICAL REFERENCE PRINTS

BAS_E1.0_WATERFORD LAKES_LIGHTING PLAN
BAS_E2.0_WATERFORD LAKES_POWER PLAN
BAS_E2.1_WATERFORD LAKES_LOW VOLT PLAN
BAS_E2.2_WATERFORD LAKES_POWER PLAN
BAS_E3.0_WATERFORD LAKES_SINGLE-LINE DIAGRAM
BAS_E3.1_WATERFORD LAKES_PANEL SCHEDULE
BAS_E3.2_WATERFORD LAKES_ELECTRICAL DETAILS
BAS_E3.3_WATERFORD LAKES_ELECTRICAL DETAILS

BAS_M1.0_WATERFORD LAKES_MECHANICAL PLAN
BAS_M3.0_WATERFORD LAKES_MECHANICAL SCHEDULES

WESCO FACTORY DRAWINGS

WESCO_IFS DRAWING_WATERFORD LAKES_1-6
WESCO_IFS DRAWING_WATERFORD LAKES_2-6
WESCO_IFS DRAWING_WATERFORD LAKES_3-6
WESCO_IFS DRAWING_WATERFORD LAKES_4-6
WESCO_IFS DRAWING_WATERFORD LAKES_5-6
WESCO_IFS DRAWING_WATERFORD LAKES_6-6

WATT STOPPER LIGHTING SYSTEM INSTALL DOCUMENTS

WATTSTOPPER SUBMITTAL PROVIDED AS A SEPARATE DOCUMENT SET AND WILL BE PROVIDED ONCE THE JOB IS AWARDED AND PO ISSUED TO WATTSTOPPER.

ONCE SUBMITTAL IS AVAILABLE, IT WILL BE ISSUED TO THE INSTALLING CONTRACTORS.

WIRE/POLYTUBE SPEC LEGEND (NOT ALL WILL BE USED)

WINDY CITY WIRE
386 INTERNATIONAL DRIVE, SUITE H
BOLINGBROOK, IL 60440
SUSAN CHRISTY
EMAIL : SCHRISTY@SMARTWIRE.COM
PHONE : 678-317-3190
PHONE : 1-800-379-1191

555619 — 24/8 : CAT5 NETWORK CABLE, PLENUM RATED (WHITE)
WINDY CITY WIRE : 555610 OR EQUAL

556600 — 24/8 : CAT6 NETWORK CABLE, PLENUM RATED (WHITE)
WINDY CITY WIRE : 556600 OR EQUAL

004352 — 22/8 : NOVAR INPUT/OUTPUT WIRE, PLENUM RATED (WHITE)
WINDY CITY WIRE : 004352 OR EQUAL

110DB — 22/2 : WET LOCATION BACNET SPEC WIRE, NON-PLENUM RATED (BLACK)
WINDY CITY WIRE : 107500-110DB OR EQUAL

43000 — 22/2 : CSUSA SPECIFIED BACNET WIRE, SHIELDED, PLENUM RATED (WHITE)
WINDY CITY WIRE : 043000AL OR EQUAL

002394 — 18/12 : CSUSA SPECIFIED T-STAT WIRE, PLENUM RATED (WHITE)
WINDY CITY WIRE : 002394 OR EQUAL

002352 — 18/8 : CSUSA SPECIFIED I/O WIRE, PLENUM RATED (WHITE)
WINDY CITY WIRE : 002352 OR EQUAL

52000L — 18/2 : CSUSA SPECIFIED BACNET WIRE, PLENUM RATED (WHITE)
WINDY CITY WIRE : 052000LC-CS OR EQUAL

002360 — 18/2 : : 0-10V DIMMING FOR LIGHTING, PLENUM RATED (GRAY)
WINDY CITY WIRE : 002360GP OR EQUAL

001320 — 16/2 : CSUSA SPECIFIED POWER WIRE, PLENUM RATED (WHITE)
WINDY CITY WIRE : 001320 OR EQUAL

7969 — 14/2 : SIEMENS SPECIFIED POWER WIRE, PLENUM RATED (BLUE)
WINDY CITY WIRE : 007969SBT OR EQUAL

1/4" — 1/4" BLACK POLY TUBING
KELE : T-101 OR EQUAL

3/8" — 3/8" BLACK POLY TUBING
KELE : T-110 OR EQUAL

— EXISTING WIRE TO BE DEMOLISHED

RISER WIRE SYMBOL KEY

WIRE SPEC REFERENCE → NEW / 43000 / 2x22/2
← INDICATES NEW WIRE
← QUANTITY OF PULLS AND WIRE TYPE

QUANTITY OF PULLS AND WIRE TYPE → ETR / 22/8
← INDICATES EXISTING TO REMAIN WIRE

*QUANTITY EXAMPLES : 2x22/2 = 2 WIRE PULLS OF 22/2, 4x22/8 = 4 WIRE PULLS OF 22/8

SYMBOL AND TEXT ABBREVIATIONS

AC	- ALTERNATING CURRENT
ACU	- AIR CONDITION UNIT
AFF	- ABOVE FINISHED FLOOR
AFMS	- AIRFLOW MEASURING STATION
AHU	- AIR HANDLING UNIT
AWG	- AMERICAN WIRE GAUGE
A/C	- AIR CONDITIONING
ATS	- AUTOMATIC TRANSFER SWITCH
AQS	- WATER SENSING SWITCH
BOH	- BACK OF HOUSE
CC	- PRICE CABLE COUPLER
CHR	- CHILLED WATER RETURN
CHS	- CHILLED WATER SUPPLY
CR	- CONDENSER WATER RETURN
CS	- CONDENSER WATER SUPPLY
CW	- COLD WATER
CIC	- CONTROLS INTERFACE CABINET
CIR	- CIRCUIT
CLG	- COOLING
CO2	- CARBON DIOXIDE SENSOR
CO	- CARBON MONOXIDE SENSOR
CT	- CURRENT SENSING SWITCH
CU	- CONDENSING UNIT
CUH	- CABINET UNIT HEATER
CW	- CONDENSER WATER
CWV	- CONDENSER WATER VALVE
C35	- PRICE FACTORY CABLE
D	- DUCT TEMPERATURE SENSOR
DIA	- DIAMETER
DC	- DIRECT CURRENT
DH	- DUCT HUMIDITY SENSOR
DP	- DIFFERENTIAL PRESSURE SENSOR
DS	- DAIKIN FACTORY T-STAT
E	- ENTHALPY SENSOR
EAT	- ENTERING AIR TEMPERATURE
ECO	- TREND I/O MODULE
EF	- EXHAUST FAN
EM	- EMERGENCY
ETR	- EXISTING TO REMAIN
ELEC	- ELECTRICAL OR ELECTRIC
EUH	- ELECTRIC UNIT HEATER
FBO	- FURNISHED BY OTHERS
FPB	- FAN POWERED BOX
FCU	- FAN COIL UNIT
FPM	- FEET PER MINUTE
GAL	- GALLON
GND	- GROUND
GPM	- GALLONS PER MINUTE
GUH	- GAS UNIT HEATER
HOA	- HAND-OFF-AUTO
HTG	- HEATING
HTR	- HEATER
HVAC	- HTG, VENT, AIR CONDITIONING
HW	- HOT WATER
HWR	- HOT WATER RETURN
HWS	- HOT WATER SUPPLY
IH	- INDOOR HUMIDITY SENSOR
INT	- INTERIOR
IRH	- INFRARED HEATER
I/O	- INPUT/OUTPUT
KW	- KILOWATT
KWH	- KILOWATT HOUR
KWM	- KW METER
LAT	- LEAVING AIR TEMPERATURE
LMBC	- WATTSTOPPER NETWORK BRIDGE
LBS	- POUNDS
LCD	- ACI SENSOR : TUCH2-4-20MA-0056
LCCP	- LIGHTING CONTACTOR CONTROL PANL
LCP	- LIGHTING CONTACTOR PANEL
LTG	- LIGHTING
LWT	- LEAVING WATER TEMPERATURE
M	- MODULATING ACTUATOR/VALVE
MAX	- MAXIMUM
MCB	- MAIN CIRCUIT BREAKER
MECH	- MECHANICAL
MLO	- MAIN LUGS ONLY
MIN	- MINIMUM
MOD	- MODULATING MOTOR/VALVE
MT	- METER
MTB	- MAIN TERMINAL BLOCK
MTR	- MOTOR
N/A	- NOT APPLICABLE
NC	- NORMALLY CLOSED
NO	- NORMALLY OPEN
NTS	- NOT TO SCALE
NUE	- NUETRAL
OC	- OCCUPANCY SENSOR
OAPS	- OUTDOOR AIR PRESSURE PICK-UP
OA	- OUTDOOR AIR TEMP SENSOR
OAF	- OUTDOOR AIR FAN
OH	- OUTDOOR HUMIDITY SENSOR
OR	- OVERRIDE
P	- PRODIGY DIFFUSER TSTAT
PH	- PHOTOCELL
PNL	- PANEL
PP	- LUTRON RELAY PACK
PPM	- PRICE POWER MODULE
PRESS	- PRESSURE
PR	- PRESSURE SENSOR/SWITCH
PSI	- POUNDS PER SQUARE INCH
PSIA	- PSI ABSOLUTE
PSID	- PSI DIFFERENTIAL
PWR	- POWER REQUIRED
QTY	- QUANTITY
R	- CONTROL RELAY
RA	- RETURN AIR
REQ	- REQUIRED
RH	- RELATIVE HUMIDITY
RPM	- REVOLUTIONS PER MINUTE
RPS	- ROOM PRESSURE PICK-UP
RTU	- ROOF TOP UNIT
RU	- SIEMENS ROOM UNIT
RWT	- RETUNR WATER TEMPERATURE
SA	- SUPPLY AIR
SEQ	- RELAY SEQUENCER
SETPT	- SET POINT
S.I.P.	- SECURITY INTERFACE PANEL
SOP	- SEQUENCE OF OPERATION
SQFT	- SQUARE FEET
T	- CONTROL TRANSFORMER
TAB	- TEST AND BALANCE
TB	- TERMINAL BLOCK
TCH	- CARRIER SENSOR : ZS2P-HC-CAR
TEMP	- TEMPERATURE
THS	- CARRIER SENSOR : ZS2P-H-CAR
TS	- CARRIER SENSOR : ZS2P-CAR
TSTAT	- THERMOSTAT
TYP	- TYPICAL
UPS	- UNINTERRUPTIBLE POWER SUPPLY
VA	- VOLT * AMPS
V/PH/HZ	- VOLTS/PHASE/HERTZ
VAV	- VARIABLE AIR VOLUME
VFD	- VARIABLE FREQUENCY DRIVE
WMT	- WATER METER
XFMR	- CONTROL TRANSFORMER
ZN	- ZONE/SPACE SENSOR
2B	- 2 BUTTON OVERRIDE
4B	- 4 BUTTON OVERRIDE
6B	- 6 BUTTON OVERRIDE
8B	- 8 BUTTON OVERRIDE
XB	- 12 BUTTON OVERRIDE
2P	- 2-POSITION MOTOR/VALVE
8500	- LENNOX SENSOR : 14X55

NO:	REVISION DESCRIPTION	DATE	BY
1	BAS BID SET	11/06/20	SMP
2			
3			
4			
5			
6			
7			
8			
9			
10			
11			
12			
13			
14			
15			

ISSUED FOR	ISSUED DATE
BID	11/06/20

COPYRIGHT NOTICE

© 2020 BY CSUSA, ACCU-TEMP, LLC. NO PART OF THIS DRAWING MAY BE TRANSMITTED, STORED IN ANY RETRIEVAL SYSTEM OR REPRODUCED, IN ANY WAY OR BY ANY MEANS, WITHOUT THE EXPRESS WRITTEN CONSENT OF CSUSA, STRATEGIC ACCOUNTS.

STAMP

ARCHITECT

BRR ARCHITECTURE
6700 ANTIOCH PLAZA, SUITE 300
MERRIAM, KS 66204
PHONE : (913) 262-9095
WEB : WWW.BRRARCH.COM

ENGINEER

HENDERSON ENGINEERS INC.
8345 LENEXA DRIVE, SUITE 300
LENEXA, KS 66214
PHONE : (913) 742-5000
WEB : WWW.HENDERSONENGINEERS.COM

OWNER

NIKE INC.
ONE BOWERMAN DRIVE
BEAVERTON, OR 97005
PHONE : (503) 671-6453
WEB : WWW.NIKE.COM

BUILDING AUTOMATION SYSTEM COMPANY

COMFORT SYSTEMS USA
STRATEGIC ACCOUNTS
2655 FORTUNE CIRCLE WEST, SUITE E
INDIANAPOLIS, IN 46241
PHONE: (317)638-5363
FAX: (317)264-3571

ENGR BY: P. SAWYER	PROJECT NO:
CHECKED BY: N/A	PROJECT MGR: J. OSKINS
DATE DRAWN: 11/06/20	CONTROL MFR: NOVAR

PROJECT ADDRESS

NIKE FACTORY STORE - UNITE

WATERFORD LAKES SHOPPING CENTER
ORLANDO, FL

SHEET INFORMATION

TITLE SHEET

SHEET NUMBER

BAS
0.0

GENERAL NOTES

ITEMS ON BAS CHECK-OFF SHEET MUST BE COMPLETED PRIOR TO BAS AND GBS COMMISSIONING AT THE END OF THE JOB (SEE JOB SITE SCHEDULE BY GC FOR EXACT DATES). FAILURE TO PROVIDE A COMPLETE ROUGHED IN AND TERMINATED BAS SYSTEM WILL RESULT IN BAS CONTRACT HOLDING CONTRACTOR BEING BILLED $1500.00 A DAY FOR LOST TIME, TRAVEL, AND LODGING.

DURING INSTALL, IF ANY QUESTIONS COME UP, PLEASE CONTACT THE FOLLOWING SYSTEMS ENGINEER FOR ANSWERS.

PAUL SAWYER

PH: 317-246-5170
EMAIL: PAUL.SAWYER@COMFORTSYSTEMSUSA.COM

RISER NOTES — CHECK-OFF

1. BAS BACKPLATE AND KW METER PROVIDED IN CSUSA BAS PACKAGE IS FACTORY INSTALLED AND WIRED IN IFS BY IFS MANUFACTURER. _____

   BAS INSTALLING CONTRACTOR IS REQUIRED TO:

   1.1 FIELD INSTALL ALL KW METER CT'S AROUND MAIN SERVING EACH PANEL MONITORED

   1.2 PULL WIRE AS DESCRIBED IN THIS DRAWING SET TO PANEL IN IFS

   1.3 TERMINATE FIELD TERMINATIONS AS DESCRIBED IN THIS DRAWING SET.

2. EXHAUST FAN SHOWN FOR REFERENCE ONLY AND IS NOT PART OF THE BAS PACKAGE. FAN IS CONTROLLED VIA SMART BREAKER. _____

   ELECTRICAL CONTRACTOR REQUIRED TO:

   2.1 PULL POWER WIRE AS DESCRIBED IN THE ELECTRICAL DRAWINGS

3. (1) 18 GAUGE 2 CONDUCTOR AND (1) 18 GAUGE 8 CONDUCTOR SHIELDED WIRES (SEE COVER FOR SPEC) FOR RTU ZONE SENSOR AND FUTURE T-STAT. (TYP. ALL RTU'S) _____

4. CARRIER RTU WITH FACTORY INSTALLED BACNET BOARD, OUTDOOR AIR SENSOR, SUPPLY AIR SENSOR, AND ECONOMIZER SHOWN FOR REFERENCE. _____

   BAS INSTALLING CONTRACTOR IS REQUIRED TO:

   4.1 PULL WIRE AS DESCRIBED IN THIS DRAWING

   4.2 TERMINATE WIRES AS DESCRIBED IN THIS DRAWING SET.

5. WATTSTOPPER DEVICES SUPPLIED IN CSUSA BAS PACKAGE. REFERENCE WATTSTOPPER SUBMITTAL PACKAGE FOR ADDITIONAL INFORMATION AND WIRE PULLS. _____

   BAS INSTALLING CONTRACTOR REQUIRED TO:

   5.1 INSTALL ALL WATTSTOPPER NETWORK BRIDGES, ROOM CONTROLLERS, AND SWITCHES REQUIRED FOR A COMPLETE LIGHTING SYSTEM.

   5.2 PULL ALL WIRE AS DESCRIBED IN THIS DRAWING SET AND THE INSTALL DOCUMENTS FOR THE WATTSTOPPER LIGHTING CONTROLS.

   5.3 TERMINATE ALL WIRES AS DESCRIBED IN THIS DRAWING SET AND WATTSTOPPER LIGHTING SYSTEM DOCUMENTATION.

6. OUTDOOR SENSOR ASSEMBLY MOUNTS TO SIDE OF RTU USING 1/2" CONDUIT FACING NORTH AND AWAY FROM ARTIFICIAL LIGHT SOURCES. _____

   BAS INSTALLING CONTRACTOR IS REQUIRED TO:

   6.1 SUPPLY MATERIAL SPECIFIED IN INTERFACE DETAIL

   6.2 MOUNT CONDUIT TO SIDE OF UNIT

   6.3 MOUNT ASSEMBLY TO CONDUIT ON SIDE OF UNIT,

   6.4 PULL WIRES THROUGH UNIT AND UP CONDUIT TO SENSORS MOUNTED ON ASSEMBLY

   6.5 TERMINATE WIRES ON SENSORS AND ON EMS BACKPLATE AS DESCRIBED IN THIS DRAWING SET.

   6.6 ALL UNIT PENETRATIONS AND TOP OF CONDUIT WHERE WIRE COMES OUT MUST BE SEALED WATER TIGHT.

7. SECURITY INTERFACE PANEL (S.I.P.) MOUNTS NEXT TO SECURITY HEAD END. _____

   BAS INSTALLING CONTRACTOR IS REQUIRED TO:

   7.1 MOUNT S.I.P. NEXT TO SECURITY SYSTBAS HEAD END (TYPICALLY MOUNTED IN AV ROOM)

   7.2 PIPE INTO SECURITY HEAD END FOR SECURITY INTERFACE

   7.3 PULL WIRE AS DESCRIBED IN THIS DRAWING SET

   7.4 TERMINATE WIRES AS DESCRIBED IN THIS DRAWING SET.

8. SECURITY PANEL SHOWN FOR REFERENCE ONLY. ALL SECURITY WORK PROVIDED BY OTHERS. _____

9. PRICE FACTORY PROVIDED CAT5 PATCH CABLE FOR CONNECTION BETWEEN PRICE MASTER DIFFUSER AND FACTORY PROVIDED THERMOSTAT. _____

RISES NOTES CONTINUED — CHECK-OFF

10. PRICE MASTER/DRONE MODULATING DIFFUSER PROVIDED IN CSUSA BAS PACKAGE SHOWN FOR REFERENCE. _____

    MECHANICAL CONTRACTOR IS REQUIRED TO:

    10.1 INSTALL DIFFUSER IN CEILING

    10.2 FIELD INSTALL PRESSURE RELIEF COLLAR PROVIDED WITH EACH MASTER DIFFUSER BETWEEN DIFFUSER AND DUCT CONNECTION.

    BAS INSTALLING CONTRACTOR IS REQUIRED TO:

    10.3 PULL WIRE AS DESCRIBED IN THIS DRAWING SET

    10.4 TERMINATE WIRES AS DESCRIBED IN THIS DRAWING SET.

11. PRICE FACTORY PROVIDED CABLE PART# C35 FOR CONNECTION BETWEEN MASTER DIFFUSER AND PRICE POWER MODULE (PPM) AND/OR DRONE DIFFUSER. _____

12. PRICE DIFFUSER POWER MODULE SUPPLIED IN CSUSA BAS PACKAGE. _____

    BAS INSTALLING CONTRACTOR REQUIRED TO:

    12.1 MOUNT PRICE POWER MODULE (PPM) ABOVE CEILING IN LOCATION SHOWN IN ELECTRICAL DRAWINGS

    12.2 POWER PPM WITH DEDICATED 20 AMP 120V CIRCUIT

    12.3 PULL WIRE AS DESCRIBED IN THIS DRAWING SET

    12.4 TERMINATE WIRE AS DESCRIBED IN THIS DRAWING SET.

13. PRICE CABLE COUPLER FACTORY PART # CC FOR COUPLING (2) C35 CABLES TOGETHER TO EXTEND THE LENGTH OF CABLE FOR POWER. (IF REQUIRED) _____

14. ZONE DAMPER SHOWN FOR REFERENCE. CSUSA BAS PACKAGE ONLY CONTAINS ACTUATOR TO BE FIELD INSTALLED ON DAMPER SHAFT PROVIDED BY OTHERS. _____

    BAS INSTALLING CONTACTOR REQUIRED TO:

    14.1 INSTALL DAMPER ACTUATOR ON DAMPER SHAFT (PROVDED BY OTHERS)

    14.2 PULL WIRE AS DESCRIBED IN THIS DRAWING SET.

    14.3 TERMINATE WIRES AS DESCRIBED IN THIS DRAWING SET.

15. (2) TOTAL WIRE PULLS OF 18 GAUGE 2 CONDUCTOR (SEE COVER FOR SPEC) WIRE PULLED FROM BAS PANEL TO 8 BUTTON LIGHTING OVERRIDE MOUNTED IN ASM OFFICE. _____

    BAS INSTALLING CONTRACTOR IS REQUIRED TO:

    15.1 MOUNT OVERRIDE BUTTON IN A SINGLE GANG BOX

    15.2 PULL WIRE AS DESCRIBED IN THIS DRAWING.

    15.3 TERMINATE WIRES AS DESCRIBED IN THIS DRAWING SET.

16. NETWORK GEAR SHOWN FOR REFERENCE ONLY AND IS NOT SUPPLIED IN THE CSUSA BAS PACKAGE. SYSTEM TIES INTO NETWORK GEAR VIA CAT5 NETWORK CABLED PULLED BETWEEN BAS PANEL IN IFS AND THE NETWORK GEAR AND TERMINATED ON NETWORK PORT FOR REMOTE MONITORING AND CONNECTION. _____

17. FACTORY RS485 WIRING PROVIDED BY IFS MANUFACTURER. WIRE IS COILED UP IN SECTION PANEL IS LOCATED IN AND REQUIRES FIELD ROUTING TO THE BAS CONTROLLER ONCE IT IS INSTALLED AT THE TIME OF COMMISSIONING. _____

18. UNIT HEATER SHOWN FOR REFERENCE. BAS SYSTEM CONTROLS UNIT HEATER (UP TO 2 STAGES OF HEAT) VIA 2 RELAY SEQUENCER CONTROL BOARD. _____

    BAS INSTALLING CONTRACTOR REQUIRED TO:

    19.1 MOUNT SEQUENCER BOARD IN HEATER AND WIRE TO THE HEATER LOW VOLTAGE THERMOSTAT TERMINAL BLOCK.

    19.2 TERMINATE WIRES AS DESCRIBED IN THE BAS DRAWING SET.

NO:	REVISION DESCRIPTION	DATE	BY
1	BAS BID SET	11/06/20	SMP
2			
3			
4			
5			
6			
7			
8			
9			
10			
11			
12			
13			
14			
15			
16			
17			

ISSUED FOR	ISSUED DATE
BID	11/06/20

COPYRIGHT NOTICE

© 2020 BY CSUSA, ACCU-TEMP, LLC. NO PART OF THIS DRAWING MAY BE TRANSMITTED, STORED IN ANY RETRIEVAL SYSTEM OR REPRODUCED, IN ANY WAY OR BY ANY MEANS, WITHOUT THE EXPRESS WRITTEN CONSENT OF CSUSA, STRATEGIC ACCOUNTS.

STAMP

ARCHITECT

BRR ARCHITECTURE
6700 ANTIOCH PLAZA, SUITE 300
MERRIAM, KS 66204
PHONE : (913) 262-9095
WEB : WWW.BRRARCH.COM

ENGINEER

HENDERSON ENGINEERS INC.
8345 LENEXA DRIVE, SUITE 300
LENEXA, KS 66214
PHONE : (913) 742-5000
WEB : WWW.HENDERSONENGINEERS.COM

OWNER

NIKE INC.
ONE BOWERMAN DRIVE
BEAVERTON, OR 97005
PHONE : (503) 671-6453
WEB : WWW.NIKE.COM

BUILDING AUTOMATION SYSTEM COMPANY

COMFORT SYSTEMS USA
STRATEGIC ACCOUNTS
2655 FORTUNE CIRCLE WEST, SUITE E
INDIANAPOLIS, IN 46241
PHONE: (317)638-5363
FAX: (317)264-3571

ENGR BY: P. SAWYER	PROJECT NO:
CHECKED BY: N/A	PROJECT MGR: J. OSKINS
DATE DRAWN: 11/06/20	CONTROL MFR: NOVAR

PROJECT ADDRESS

NIKE FACTORY STORE - UNITE

WATERFORD LAKES SHOPPING CENTER
ORLANDO, FL

SHEET INFORMATION

BUILDING AUTOMATION SYSTEM
RISER DIAGRAM NOTES
AND CHECK-OFF SHEET

SHEET NUMBER

BAS
1.1

RISER GENERAL NOTES

1. SEE COVER FOR WIRE SPECIFICATIONS AND SYMBOL ABBREVIATIONS.
2. SEE EMS APPENDIX DRAWINGS FOR EQUIPMENT LOCATIONS.
3. SEE EMS 1.3 AND FLOW DIAGRAM FOR ADDITIONAL WIRING PULLS AND DETAILS.
4. SEE EMS 1.1 FOR RISER NOTES AND EMS INSTALL CHECK-OFF LIST.
5. ALL WIRES PULL LISTED IN THIS DETAIL ARE NEW UNLESS NOTED.
6. SEE MECHANICAL AND ELECTRICAL PRINTS FOR EQUIPMENT LOCATIONS.
7. REFERENCE WATTSTOPPER INSTALL DOCUMENTS AND DETAILS FOR ADDITIONAL WIRE PULLS.

SPECIAL CONTROL NOTES

HOT WATER RE-CIRCULATION PUMP

- EMS CONTROLS THE PUMP VIA FACTORY INSTALLED SMART BREAKER IN WESCO GEAR.

EXHAUST FANS

- EMS CONTROLS EXHAUST FANS (EF-1 AND EF-2) VIA FACTORY INSTALLED SMART BREAKER IN WESCO GEAR.

RISER WIRE SYMBOL KEY

* QUANTITY EXAMPLES : 2x22/2 = 2 WIRE PULLS OF 22/2, 4x22/8 = 4 WIRE PULLS OF 22/8

WIRE SPEC REFERENCE → NEW / 43000 / 2x22/2 ← INDICATES NEW WIRE; QUANTITY OF PULLS AND WIRE TYPE

QUANTITY OF PULLS AND WIRE TYPE → ETR / 22/8 ← INDICATES EXISTING TO REMAIN WIRE

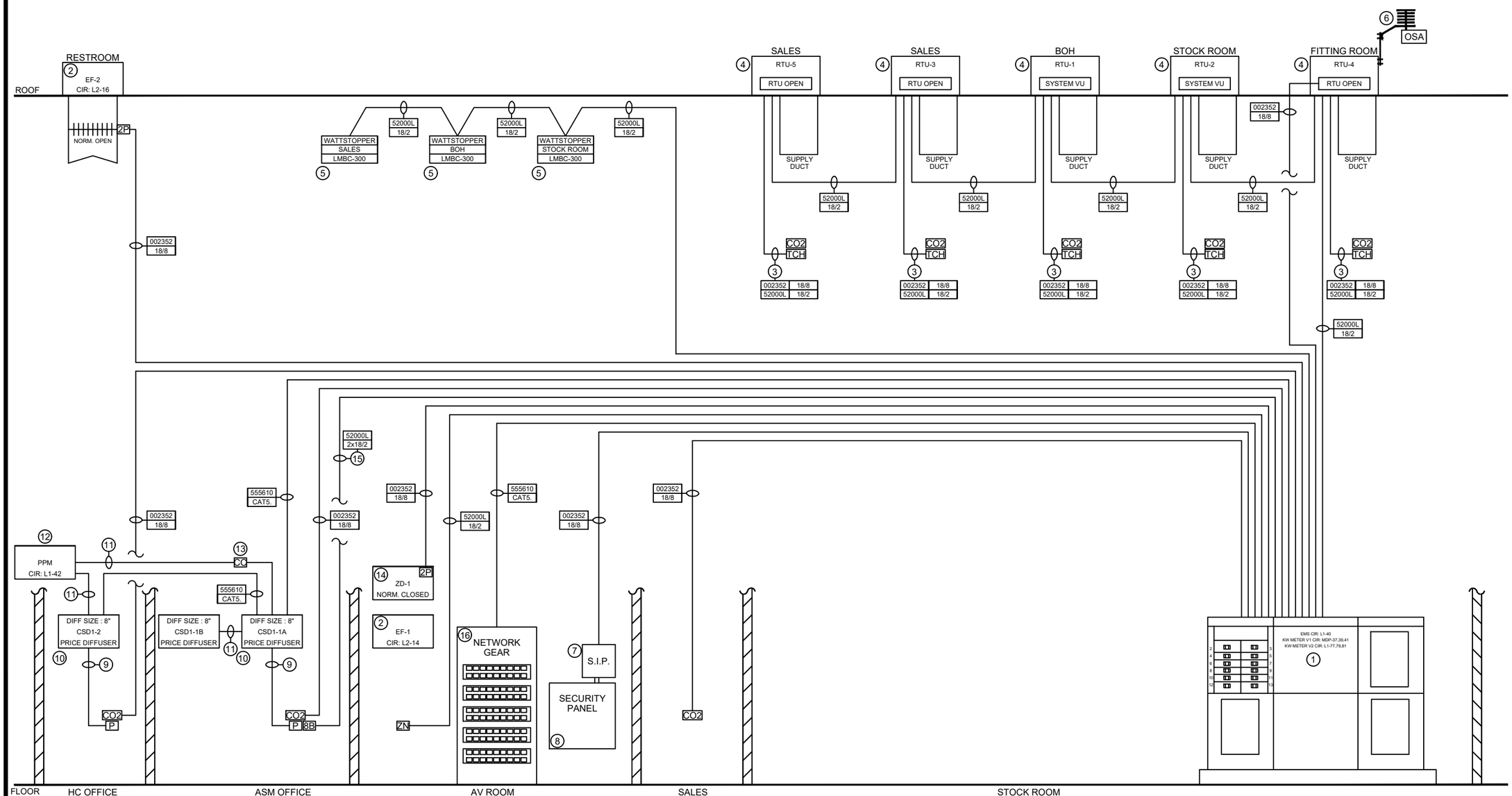

NO:	REVISION DESCRIPTION	DATE	BY
1	BAS BID SET	11/06/20	SMP
2			
3			
4			
5			
6			
7			
8			
9			
10			
11			
12			
13			
14			
15			
16			

ISSUED FOR	ISSUED DATE
BID	11/06/20

COPYRIGHT NOTICE

© 2020 BY CSUSA, ACCU-TEMP, LLC. NO PART OF THIS DRAWING MAY BE TRANSMITTED, STORED IN ANY RETRIEVAL SYSTEM OR REPRODUCED, IN ANY WAY OR BY ANY MEANS, WITHOUT THE EXPRESS WRITTEN CONSENT OF CSUSA, STRATEGIC ACCOUNTS.

STAMP

ARCHITECT

BRR ARCHITECTURE
6700 ANTIOCH PLAZA, SUITE 300
MERRIAM, KS 66204
PHONE : (913) 262-9095
WEB : WWW.BRRARCH.COM

ENGINEER

HENDERSON ENGINEERS INC.
8345 LENEXA DRIVE, SUITE 300
LENEXA, KS 66214
PHONE : (913) 742-5000
WEB : WWW.HENDERSONENGINEERS.COM

OWNER

NIKE INC.
ONE BOWERMAN DRIVE
BEAVERTON, OR 97005
PHONE : (503) 671-6453
WEB : WWW.NIKE.COM

BUILDING AUTOMATION SYSTEM COMPANY

COMFORT SYSTEMS USA
STRATEGIC ACCOUNTS
2655 FORTUNE CIRCLE WEST, SUITE E
INDIANAPOLIS, IN 46241
PHONE: (317)638-5363
FAX: (317)264-3571

ENGR BY: P. SAWYER	PROJECT NO:
CHECKED BY: N/A	PROJECT MGR: J. OSKINS
DATE DRAWN: 11/06/20	CONTROL MFR: NOVAR

PROJECT ADDRESS

NIKE FACTORY STORE - UNITE

WATERFORD LAKES SHOPPING CENTER
ORLANDO, FL

SHEET INFORMATION

BUILDING AUTOMATION SYSTEM
SINGLE-LINE RISER DIAGRAM

SHEET NUMBER

BAS
1.2

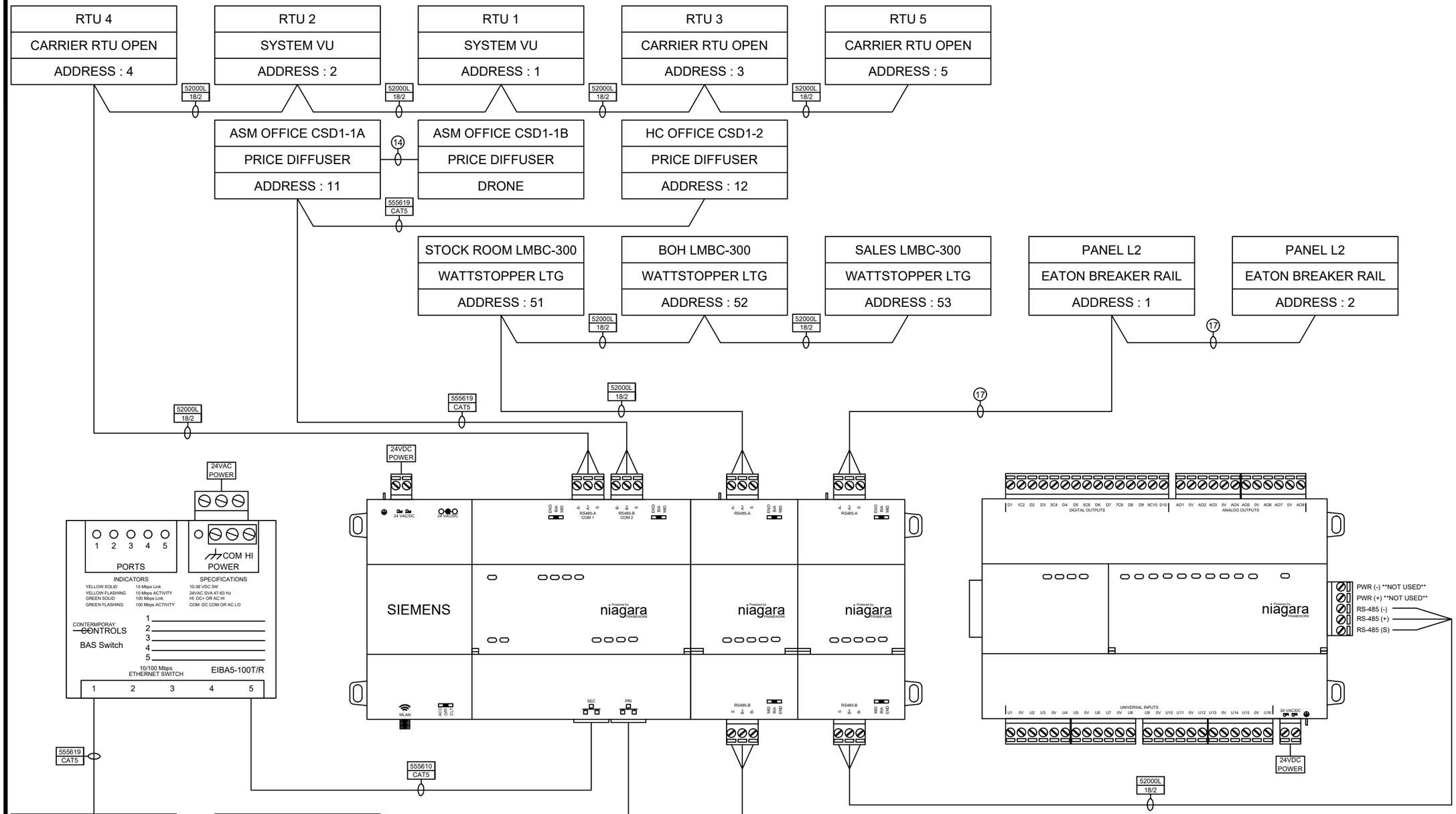

COMMUNICATIONS CONFIGURATION

PRIMARY LAN :	SET UP FOR REMOTE CONNECTION USING NIKE NETWORK. NIKE PROVIDES IP PRIOR TO SYSTEM COMMISSIONING.
	IP ADDRESS : TBD
SECONDARY LAN :	CONFIGURED FOR FIELD CONNECTION AND BACNET OVER IP COMMUNICATION
	IP ADDRESS : 192.168.0.10
ES1 COM 1 :	BACNET MS/TP
ES1 COM 2 :	BACNET MS/TP
EXP CARD 1 COM A :	BACNET MS/TP
EXP CARD 1 COM B :	BACNET MS/TP
EXP CARD 2 COM A :	MODBUS MS/TP
EXP CARD 2 COM B :	NDIO MS/TP

PART NUMBER(S)

NOVAR	: ES1	: FRONT END CONTROLLER
NOVAR	: NPB-8000-2X-485	: COMM PORT EXPANSION
SIEMENS	: IO-R-34	: 34 PT I/O MODULE

COMMUNICATION RISER GENERAL NOTES

1. SEE DRAWING EMS 1.2 FOR SINGLE LINE RISER DIAGRAM DETAIL AND WIRE SPECIFICATIONS.
2. SEE COVER FOR WIRE SPECIFICATIONS.
3. REFERENCE APPENDIX DRAWINGS AND MEP SET FOR EQUIPMENT LOCATIONS.
4. ROUTE WIRE AS DESCRIBED IN THIS DETAIL FROM ES1 (FIELD INSTALLED AT TIME OF EMS COMMISSIONING) TO EACH DEVICE AS DESCRIBED IN THIS DETAIL.
5. WHEN TERMINATING WIRE BETWEEN DEVICES, MAKE SURE TO MAINTAIN POLARITY FROM DEVICE (+ TO +, - TO -, SHIELD TO SHIELD)
6. WIRE BETWEEN ES1 AND EATON BREAKER RAILS IS SUPPLIED AND WIRED BY EATON. FIELD WIRING BETWEEN ES1 AND FIRST RAIL IN LOOP IS REQUIRED. WIRE FOR FIELD WIRING IS FACTORY SUPPLIED AND COILED UP NEAR BREAKER PANEL FOR ROUTING BACK TO ES1.

NO:	REVISION DESCRIPTION	DATE	BY
1	BAS BID SET	11/06/20	SMP

ISSUED FOR	ISSUED DATE
BID	11/06/20

COPYRIGHT NOTICE
© 2020 BY CSUSA, ACCU-TEMP, LLC. NO PART OF THIS DRAWING MAY BE TRANSMITTED, STORED IN ANY RETRIEVAL SYSTEM OR REPRODUCED, IN ANY WAY OR BY ANY MEANS, WITHOUT THE EXPRESS WRITTEN CONSENT OF CSUSA, STRATEGIC ACCOUNTS.

STAMP

ARCHITECT
BRR ARCHITECTURE
6700 ANTIOCH PLAZA, SUITE 300
MERRIAM, KS 66204
PHONE : (913) 262-9095
WEB : WWW.BRRARCH.COM

ENGINEER
HENDERSON ENGINEERS INC.
8345 LENEXA DRIVE, SUITE 300
LENEXA, KS 66214
PHONE : (913) 742-5000
WEB : WWW.HENDERSONENGINEERS.COM

OWNER
NIKE INC.
ONE BOWERMAN DRIVE
BEAVERTON, OR 97005
PHONE : (503) 671-6453
WEB : WWW.NIKE.COM

BUILDING AUTOMATION SYSTEM COMPANY
COMFORT SYSTEMS USA
STRATEGIC ACCOUNTS
2655 FORTUNE CIRCLE WEST, SUITE E
INDIANAPOLIS, IN 46241
PHONE: (317)638-5363
FAX: (317)264-3571

ENGR BY: P. SAWYER	PROJECT NO:
CHECKED BY: N/A	PROJECT MGR: J. OSKINS
DATE DRAWN: 11/06/20	CONTROL MFR: NOVAR

PROJECT ADDRESS
NIKE FACTORY STORE - UNITE
WATERFORD LAKES SHOPPING CENTER
ORLANDO, FL

SHEET INFORMATION
BUILDING AUTOMATION SYSTEM
COMMUNICATIONS
SINGLE-LINE RISER DIAGRAM

SHEET NUMBER
BAS
1.3

V4 WESCO BACKPLATE

SYMBOLS

X : FIELD WIRING SYMBOL

X : FACTORY LINE VOLTAGE WIRING

X : FACTORY LOW VOLTAGE WIRING

PANEL BILL OF MATERIAL

SUB-PANEL DIMENSION : 28" W x 39" T

WIRE DUCT :	T1-1030-W	(QTY - 1)
WIRE DUCT :	T1-3030-W	(QTY - 3)
TERMINAL BLOCK :	M4/6	(QTY - 26)
GROUND BLOCK :	M4/6P	(QTY - 1)
CIRCUIT BREAKER :	1C5UL	(QTY - 3)
END STOP :	BAM2	(QTY - 16)
DIN RAIL :	BAM1000	(QTY - 3)
24VAC POWER SUPPLY :	PSH100A100AB10	(QTY - 1)
24VDC POWER SUPPLY :	6EP3332-6SB00-0AY0	(QTY - 2)
CONTROLLER :	ES1	(QTY - 1)
EXPANSION MODULE :	NPB-8000-2X-485	(QTY - 2)
I/O MODULE :	IO-R-16	(FUTURE USE)
I/O MODULE :	IO-R-34	(QTY - 1)
BAS NETWORK SWITCH :	EIBA5-100T/R	(QTY - 1)

GENERAL CONTROL NOTES

1. IO-R-34 RELAY OUTPUTS HAVE 24VAC JUMPED ACROSS COMMON TERMINALS SUPPLIED BY IFS MANUFACTURE CONTROL TRANSFORMER FOR CONTROL THE IFS MANUFACTURE SMART BREAKER CONTROL BOARDS.

BACK PLATE MANUFACTURER ASSEMBLY NOTES

1. ALL WIRE SHOULD BE 14 GAUGE WIRE.
2. POWER BACKPLATE WITH DEDICATED 120VAC, 20 AMB CIRCUIT.
3. GROUND EACH DEVICE AS DESCRIBED IN THIS DETAIL.
4. POWER EACH DEVICE WITH CONTROLLER 24VDC AS SHOWN IN THIS DETAIL.
5. JUMP POSITIVE 24VDC ACROSS RELAY COMMONS ON IO-R-34.
6. INSTALL 5 AMP BREAKER FOR LINE VOLTAGE GOING TO EACH 24VDC POWER SUPPLY(6EP3332-6SB00-0AY0) AS SHOWN.
7. INSTALL 5 AMP BREAKER FOR LINE VOLTAGE GOING TO 24VAC POWER SUPPLY (PSH100A100AB10).
8. COMMON IO-R-34 "0V" WITH NEGATIVE 24VDC OF INPUT/OUTPUT DC POWER SUPPLY AS SHOWN IN THIS DETAIL.
9. ADD JUMPER BAR ON TERMINAL BLOCKS SHOWN JUMPED TOGETHER SO JUMPERS DO NOT NEED ADDED IN THE FIELD.
10. LABEL EACH POWER SUPPLY AS SHOWN IN THIS DETAIL.
11. LABEL EACH BREAKER FOR WHICH POWER SUPPLY IT SERVES.
12. DEVICES MOUNT IN LOCATION SHOWN. ADDITIONAL DEVICES MAY BE ADDED IN THE FUTURE AND SPACE MUST BE AVAILABLE FOR EXPANSION.

FIELD WIRING NOTES

1. VERIFY 500 OHM RESISTOR IS INSTALLED PARALLEL TO EACH CURRENT SENSOR AND "0V" INPUT TERMINAL.
2. WIRE IO-R-34 MODULES FOR COMMUNICATION AS DESCRIBED IN EMS 1.3 RISER DIAGRAM USING BACNET RATED COMMUNICATION WIRE.
3. WIRE KW METER FOR COMMUNICATION AS DESCRIBED IN EMS 1.3 RISER DIAGRAM USING BACNET RATED COMMUNICATION WIRE.

PROGRAMMING NOTES

1. LAN 1 ADDRESS ON ES1 IS PROVIDED BY NIKE.
2. LAN 2 ADDRESS ON ES1 IS 192.168.0.10
3. BACNET IP ADDRESS FOR DENT METER IS 192.168.0.9

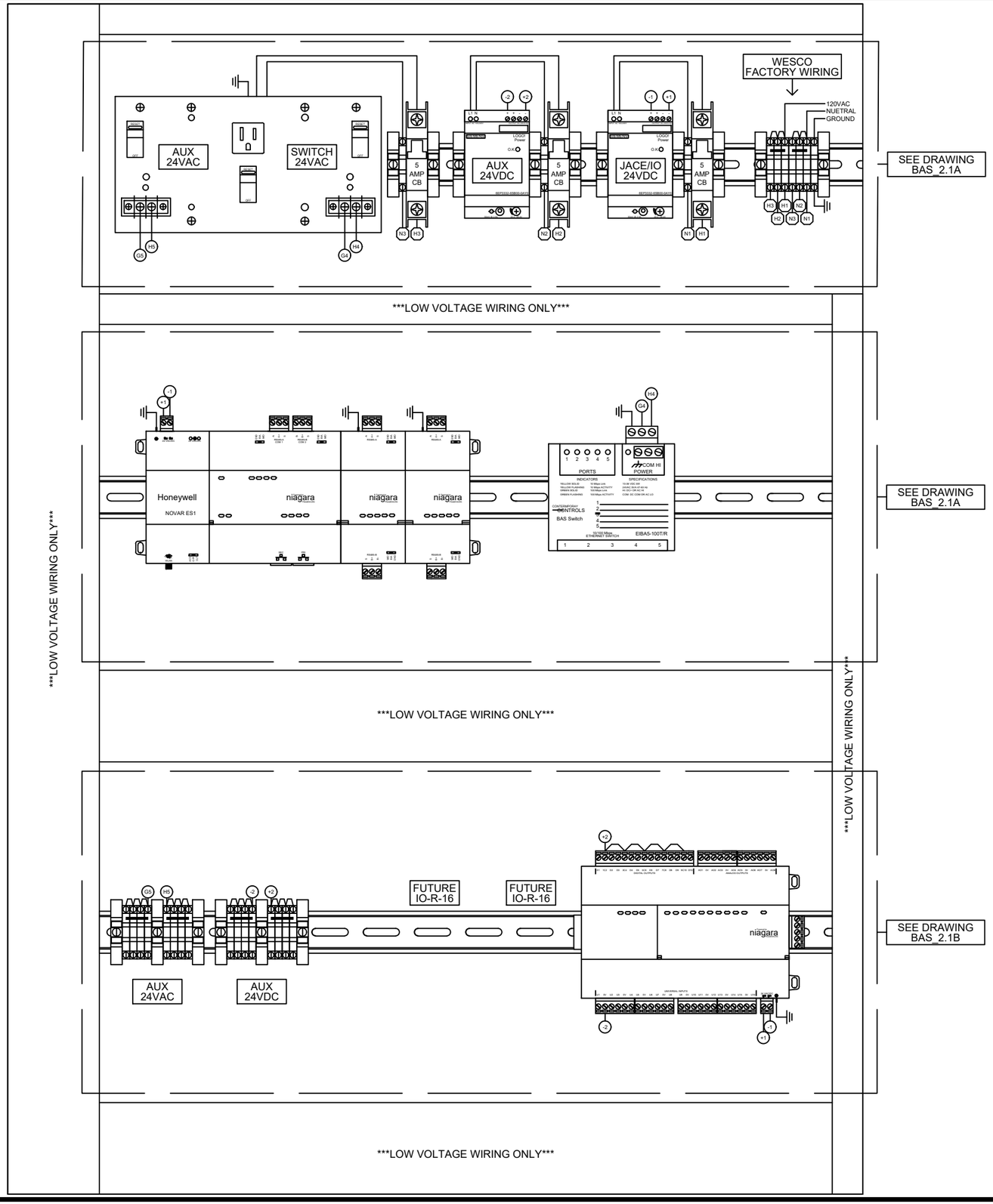

POINTS LIST

INPUT TYPES

(D) = DIGITAL (P) = PULSE
(T) = THERMISTOR
(C) = CURRENT
(V) = VOLTAGE

*****VERIFY 500 OHM RESISTOR IS INSTALLED*****
*****PARALLEL TO EACH CURRENT SENSOR *****
*****AND "0V" INPUT TERMINAL*****

IO-R-34 UNIVERSAL INPUTS

1. OUTDOOR LIGHT LEVEL (C)
2. OUTDOOR TEMPERATURE (T)
3. OUTDOOR HUMIDITY LEVEL (C)
4. AV ROOM TEMPERATURE (T)
5.
6. ASM OFFICE CO2 LEVEL (C)
7. HC OFFICE CO2 LEVEL (C)
8.
9. SALES CO2 LEVEL (C)
10.
11.
12.
13. AV ROOM ZONE DAMPER OPEN (D)
14. EF-2 DAMPER OPEN (D)
15. SECURITY ARMED/DISARMED (D)
16. SECURITY ALARM (D)

IO-R-34 DIGITAL RELAY OUTPUTS (NO)

1. AV ROOM ZONE DAMPER OPEN (+24VDC)
2. EF-2 DAMPER CLOSE (+24VDC)
3. SPARE (+24VDC)
4. SPARE (+24VDC)
5. SPARE (+24VDC)
6. SPARE (+24VDC)
7. SPARE (+24VDC)
8. SPARE (+24VDC)
9. SPARE (+24VDC)
10. SPARE (+24VDC)

IO-R-34 ANALOG OUTPUTS

1. SPARE (0-10VDC)
2. SPARE (0-10VDC)
3. SPARE (0-10VDC)
4. SPARE (0-10VDC)
5. SPARE (0-10VDC)
6. SPARE (0-10VDC)
7. SPARE (0-10VDC)
8. SPARE (0-10VDC)

NO:	REVISION DESCRIPTION	DATE	BY
1	BAS BID SET	11/06/20	SMP
2			
3			
4			
5			
6			
7			
8			
9			
10			
11			
12			
13			
14			
15			
16			

ISSUED FOR	ISSUED DATE
BID	11/06/20

COPYRIGHT NOTICE

© 2020 BY CSUSA, ACCU-TEMP, LLC. NO PART OF THIS DRAWING MAY BE TRANSMITTED, STORED IN ANY RETRIEVAL SYSTEM OR REPRODUCED, IN ANY WAY OR BY ANY MEANS, WITHOUT THE EXPRESS WRITTEN CONSENT OF CSUSA, STRATEGIC ACCOUNTS.

STAMP

ARCHITECT

BRR ARCHITECTURE
6700 ANTIOCH PLAZA, SUITE 300
MERRIAM, KS 66204
PHONE : (913) 262-9095
WEB : WWW.BRRARCH.COM

ENGINEER

HENDERSON ENGINEERS INC.
8345 LENEXA DRIVE, SUITE 300
LENEXA, KS 66214
PHONE : (913) 742-5000
WEB : WWW.HENDERSONENGINEERS.COM

OWNER

NIKE INC.
ONE BOWERMAN DRIVE
BEAVERTON, OR 97005
PHONE : (503) 671-6453
WEB : WWW.NIKE.COM

BUILDING AUTOMATION SYSTEM COMPANY

COMFORT SYSTEMS USA
STRATEGIC ACCOUNTS
2655 FORTUNE CIRCLE WEST, SUITE E
INDIANAPOLIS, IN 46241
PHONE: (317)638-5363
FAX: (317)264-3571

ENGR BY: P. SAWYER	PROJECT NO:
CHECKED BY: N/A	PROJECT MGR: J. OSKINS
DATE DRAWN: 11/06/20	CONTROL MFR: NOVAR

PROJECT ADDRESS

NIKE FACTORY STORE - UNITE

WATERFORD LAKES SHOPPING CENTER
ORLANDO, FL

SHEET INFORMATION

BUILDING AUTOMATION SYSTEM
WESCO GEAR
MAIN CONTROL PANEL DETAIL

SHEET NUMBER

BAS
2.1A

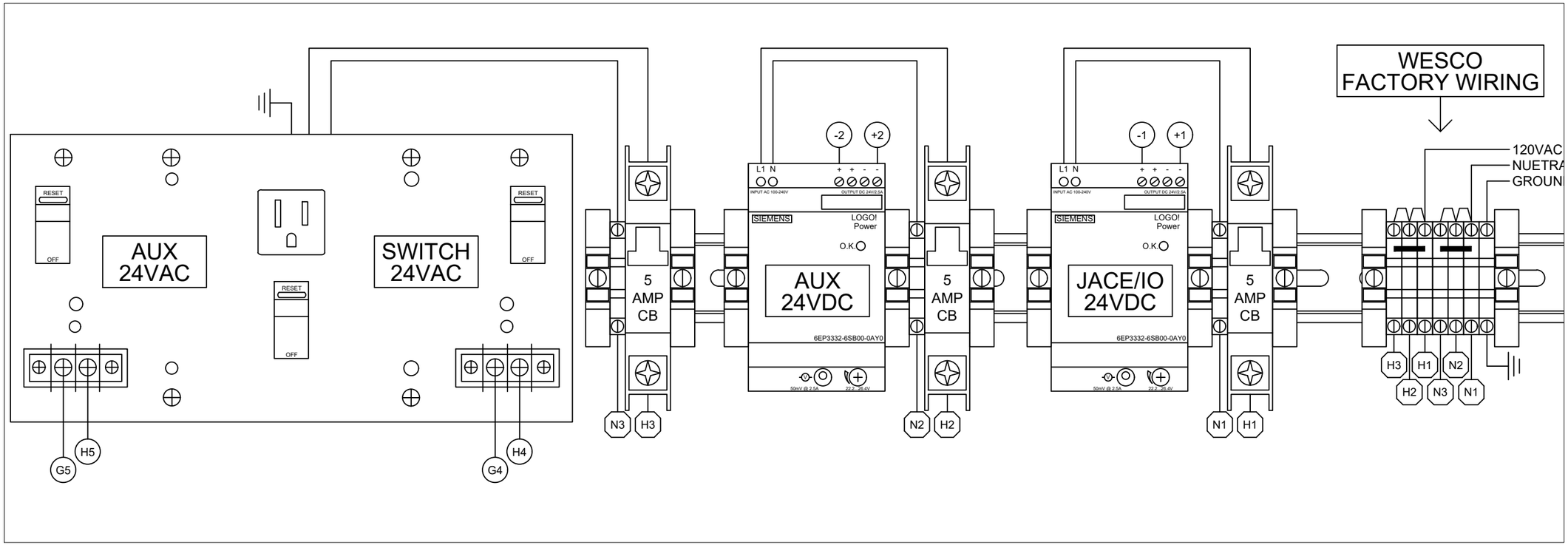

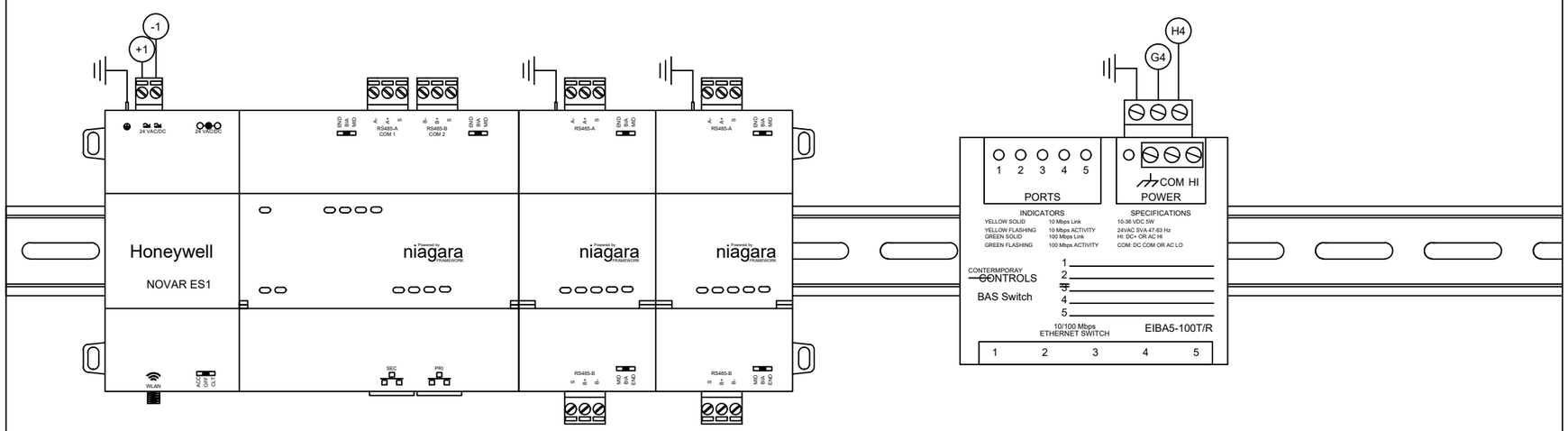

V VOLTAGE WIRING ONLY***

NO:	REVISION DESCRIPTION	DATE	BY
1	BAS BID SET	11/06/20	SMP
2			
3			
4			
5			
6			
7			
8			
9			
10			
11			
12			
13			
14			
15			
16			

ISSUED FOR	ISSUED DATE
BID	11/06/20

COPYRIGHT NOTICE

© 2020 BY CSUSA, ACCU-TEMP, LLC. NO PART OF THIS DRAWING MAY BE TRANSMITTED, STORED IN ANY RETRIEVAL SYSTEM OR REPRODUCED, IN ANY WAY OR BY ANY MEANS, WITHOUT THE EXPRESS WRITTEN CONSENT OF CSUSA, STRATEGIC ACCOUNTS.

STAMP

ARCHITECT

BRR ARCHITECTURE
6700 ANTIOCH PLAZA, SUITE 300
MERRIAM, KS 66204
PHONE : (913) 262-9095
WEB : WWW.BRRARCH.COM

ENGINEER

HENDERSON ENGINEERS INC.
8345 LENEXA DRIVE, SUITE 300
LENEXA, KS 66214
PHONE : (913) 742-5000
WEB : WWW.HENDERSONENGINEERS.COM

OWNER

NIKE INC.
ONE BOWERMAN DRIVE
BEAVERTON, OR 97005
PHONE : (503) 671-6453
WEB : WWW.NIKE.COM

BUILDING AUTOMATION SYSTEM COMPANY

COMFORT SYSTEMS USA
STRATEGIC ACCOUNTS
2655 FORTUNE CIRCLE WEST, SUITE E
INDIANAPOLIS, IN 46241
PHONE: (317)638-5363
FAX: (317)264-3571

ENGR BY: P. SAWYER	PROJECT NO:
CHECKED BY: N/A	PROJECT MGR: J. OSKINS
DATE DRAWN: 11/06/20	CONTROL MFR: NOVAR

PROJECT ADDRESS

NIKE FACTORY STORE - UNITE

WATERFORD LAKES SHOPPING CENTER
ORLANDO, FL

SHEET INFORMATION

BUILDING AUTOMATION SYSTEM
WESCO GEAR
MAIN CONTROL PANEL
ENLARGED DETAILS

SHEET NUMBER

BAS
2.1B

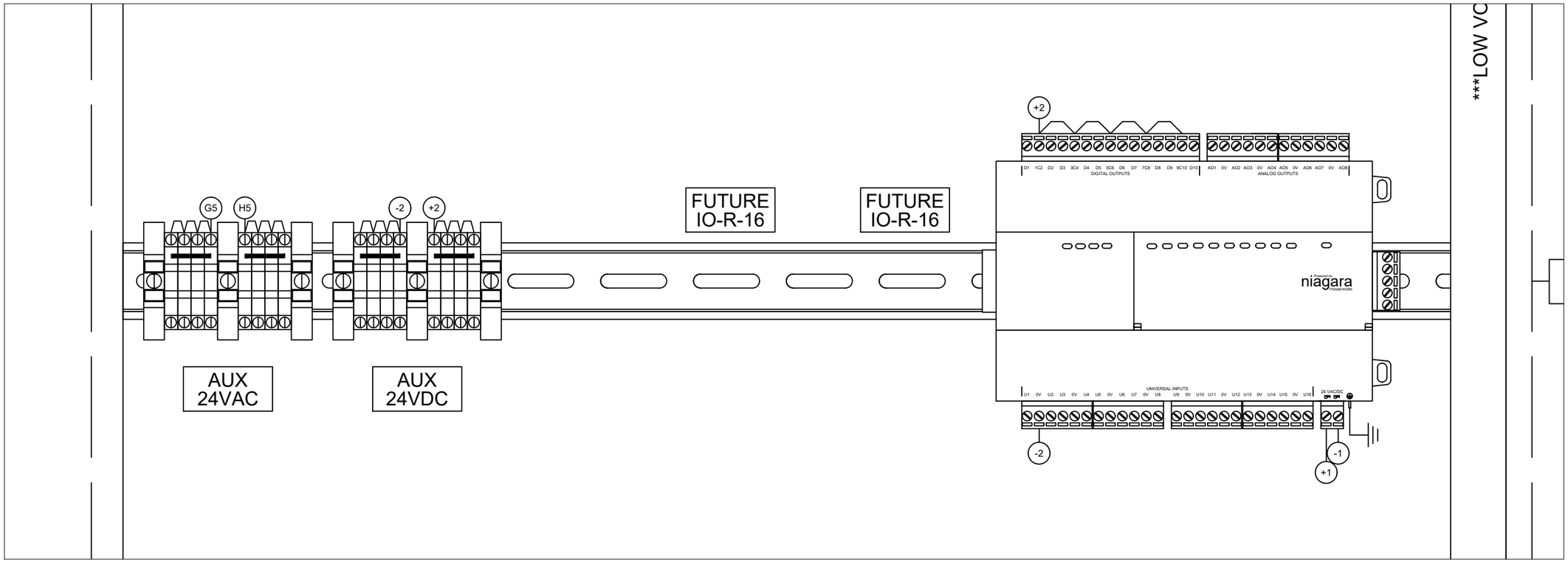

NO:	REVISION DESCRIPTION	DATE	BY
1	BAS BID SET	11/06/20	SMP
2			
3			
4			
5			
6			
7			
8			
9			
10			
11			
12			
13			
14			
15			
16			

ISSUED FOR	ISSUED DATE
BID	11/06/20

COPYRIGHT NOTICE

© 2020 BY CSUSA, ACCU-TEMP, LLC. NO PART OF THIS DRAWING MAY BE TRANSMITTED, STORED IN ANY RETRIEVAL SYSTEM OR REPRODUCED, IN ANY WAY OR BY ANY MEANS, WITHOUT THE EXPRESS WRITTEN CONSENT OF CSUSA, STRATEGIC ACCOUNTS.

STAMP

ARCHITECT

BRR ARCHITECTURE
6700 ANTIOCH PLAZA, SUITE 300
MERRIAM, KS 66204
PHONE : (913) 262-9095
WEB : WWW.BRRARCH.COM

ENGINEER

HENDERSON ENGINEERS INC.
8345 LENEXA DRIVE, SUITE 300
LENEXA, KS 66214
PHONE : (913) 742-5000
WEB : WWW.HENDERSONENGINEERS.COM

OWNER

NIKE INC.
ONE BOWERMAN DRIVE
BEAVERTON, OR 97005
PHONE : (503) 671-6453
WEB : WWW.NIKE.COM

BUILDING AUTOMATION SYSTEM COMPANY

COMFORT SYSTEMS USA
STRATEGIC ACCOUNTS
2655 FORTUNE CIRCLE WEST, SUITE E
INDIANAPOLIS, IN 46241
PHONE: (317)638-5363
FAX: (317)264-3571

ENGR BY: P. SAWYER	PROJECT NO:
CHECKED BY: N/A	PROJECT MGR: J. OSKINS
DATE DRAWN: 11/06/20	CONTROL MFR: NOVAR

PROJECT ADDRESS

NIKE FACTORY STORE - UNITE

WATERFORD LAKES SHOPPING CENTER
ORLANDO, FL

SHEET INFORMATION

BUILDING AUTOMATION SYSTEM
WESCO GEAR
MAIN CONTROL PANEL
ENLARGED DETAILS

SHEET NUMBER

BAS
2.1C

OUTDOOR SENSOR ASSEMBLY

EMS PACKAGE PART

TEMP/RH SENSOR :	BELIMO PART # 22UTH-530X
PHOTOCELL :	BAPI PART # BA/LLV-20-FC
WIRE :	WINDY CITY WIRE PART # 714310VNQ (15 FOOT)

FIELD SUPPLIED MATERIAL REQUIRED

SINGLE GANG BOX :	BELL PART # 5320-0 OR EQUAL WEATHER PROOF SINGLE GANG BOX WITH (3) 1/2" INLETS
BOX COVER :	BELL PART # 2V706 OR EQUAL WEATHER PROOF BOX COVER
CORD CONNECTOR :	HUBBELL PART # SEC50BA OR EQUAL 1/2" LIQUID TIGHT CORD CONNECTOR.

SENSOR TYPE AND POWER REQUIREMENTS

24VDC, LOOP POWERED, CURRENT SENSOR

SENSOR RANGES

TEMPERATURE :	4mA = -40°F, 20mA = 160°F
HUMIDITY :	4mA = 0% RH, 20mA = 100% RH
OUTDOOR LIGHT :	4mA = 0, 20mA = 875 FOOT CANDLES

INSTALL NOTE

1. MOUNT SENSOR TO SIDE OF UNIT USING FIELD SUPPLIED 1/2" CONDUIT. USE BEST PRACTICE FOR SECURING CONDUIT AND PENETRATING INTO THE UNIT.
2. ROUTE WIRE FROM BUILDING INTO UNIT, THROUGH THE UNIT AND UP CONDUIT INTO FIELD SUPPLIED 2X4 WEATHERPROOF BELL BOX WITH COVER.
3. MOUNT PHOTOCELL TO FACE NORTH AND AWAY FROM ANY ARTIFICIAL LIGHT OR ANYTHING THAT WILL SHADOW THE SENSOR CAUSING SENSOR TO READ OFF.
4. DO NOT MOUNT SENSOR ASSEMBLY ABOVE CONDENSER FAN OF UNIT. DOING SO WILL CAUSE THE OUTDOOR TEMPERATURE AND HUMIDITY SENSOR TO READ OFF. IF FOUND DURING COMMISSIONING TO BE MOUNTED IN A LOCATION THAT EFFECTS THE READING OF THE SENSOR. RELOCATION WILL BE REQUIRED AT CONTRACTORS EXPENSE.
5. ALL UNIT PENETRATIONS SHOULD BE WATER TIGHT.

BELIMO OUTDOOR TEMPERATURE AND HUMIDITY CONFIGURATION NOTES

1. JUMPER PINS 6 AND 7 SHOULD HAVE JUMPERS IN PLACE FOR HUMIDITY OPERATION.
2. JUMPER PINS 1 SHOULD NOT HAVE A JUMPER TO ALLOW FOR DEGREES FAHRENHEIT SCALE.
3. JUMPER PINS 2 IS NOT USED.
4. JUMPER PINS 3 SHOULD HAVE A JUMPER IN PLACE.
5. JUMPER PINS 4 AND 5 SHOULD NOT HAVE A JUMPER TO ALLOW FOR CORRECT TEMPERATURE SENSOR RANGE.

BELIMO OUTDOOR TEMPERATURE AND HUMIDITY SENSOR WIRING

WESCO PANEL : AUX +24VDC	OUTDOOR HUMIDITY	22UTH-530X : UB+
IO-R-34 TERM : U3		22UTH-530X : AOI1
WESCO PANEL : AUX +24VDC	OUTDOOR TEMPERATURE	22UTH-530X : UB+
IO-R-34 TERM : U2		22UTH-530X : AOI2

BAPI OUTDOOR PHOTOCELL WIRING

WESCO PANEL : AUX +24VDC	OUTDOOR LIGHT LEVEL	BA/LLV-20-FC : RED WIRE
IO-R-34 TERM : U1		BA/LLV-20-FC : BLACK WIRE

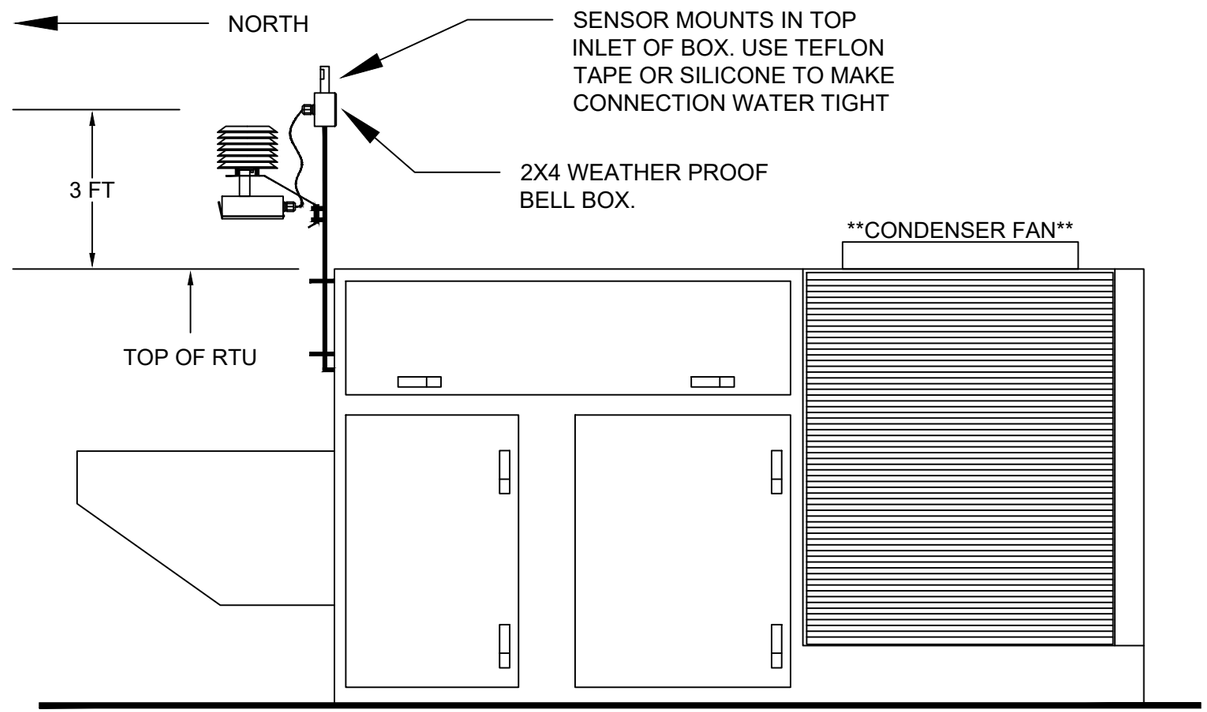

NO:	REVISION DESCRIPTION	DATE	BY
1	BAS BID SET	11/06/20	SMP

ISSUED FOR	ISSUED DATE
BID	11/06/20

COPYRIGHT NOTICE

© 2020 BY CSUSA, ACCU-TEMP, LLC. NO PART OF THIS DRAWING MAY BE TRANSMITTED, STORED IN ANY RETRIEVAL SYSTEM OR REPRODUCED, IN ANY WAY OR BY ANY MEANS, WITHOUT THE EXPRESS WRITTEN CONSENT OF CSUSA, STRATEGIC ACCOUNTS.

STAMP

ARCHITECT

BRR ARCHITECTURE
6700 ANTIOCH PLAZA, SUITE 300
MERRIAM, KS 66204
PHONE : (913) 262-9095
WEB : WWW.BRRARCH.COM

ENGINEER

HENDERSON ENGINEERS INC.
8345 LENEXA DRIVE, SUITE 300
LENEXA, KS 66214
PHONE : (913) 742-5000
WEB : WWW.HENDERSONENGINEERS.COM

OWNER

NIKE INC.
ONE BOWERMAN DRIVE
BEAVERTON, OR 97005
PHONE : (503) 671-6453
WEB : WWW.NIKE.COM

BUILDING AUTOMATION SYSTEM COMPANY

COMFORT SYSTEMS USA
STRATEGIC ACCOUNTS
2655 FORTUNE CIRCLE WEST, SUITE E
INDIANAPOLIS, IN 46241
PHONE: (317)638-5363
FAX: (317)264-3571

ENGR BY: P. SAWYER	PROJECT NO:
CHECKED BY: N/A	PROJECT MGR: J. OSKINS
DATE DRAWN: 11/06/20	CONTROL MFR: NOVAR

PROJECT ADDRESS

NIKE FACTORY STORE - UNITE

WATERFORD LAKES SHOPPING CENTER
ORLAND, FL

SHEET INFORMATION

BUILDING AUTOMATION SYSTEM
WESCO GEAR
MAIN CONTROL PANEL
INPUT/OUTPUT INTERFACE DETAILS

SHEET NUMBER

BAS
2.2

MULITIPLE SENSOR MOUNTING DETAIL

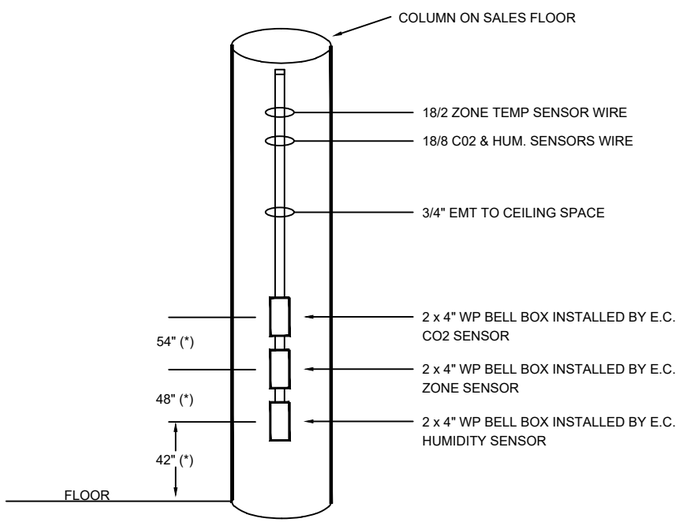

* NOTE: THIS IS THE PREFERRED HEIGHTS
* NOTE: INSTALL FOAM BACKING TO INSULATE SENSORS FROM COLUMN TEMP
* NOTE: FIELD VERIFY HEIGHTS WITH ELECTRICAL PRINTS AND GC.
* NOTE: BOXES SHOULD BE WEATHER PROOF BELL BOXES
* NOTE: FIELD VERIFY CONDUIT ROUTING AND SIZE TO RTU AND IFS

STAINLESS PLATE TEMPERATURE SENSOR DETAIL

ACI PART #

A/CP-SP

SENSOR TYPE

10K TYPE II THERMISTOR

INSTALL NOTE

1. MOUNTS TO FRONT OF SINGLE GANG WEATHERPROOF BELL BOX.
2. POLARITY DOES NOT MATTER

IO-R-34 TERM.

0V — WIRE LEAD
AV ROOM
U4 — WIRE LEAD

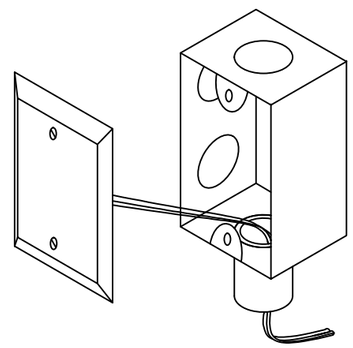

CO2 SENSOR DETAIL

ACI PART #

A/CO2-R2

SENSOR TYPE

24VDC, EXTERNALLY POWERED, CURRENT SENSOR

RANGE (LINEAR)

4mA = 0 PARTS PER MILLION (PPM), 20mA = 2000 PPM

INSTALL NOTE

1. TERMINALS SHOWN IN THE DIAGRAM ARE LOCATED ON THE OPUS BACK PLATE.
2. SENSOR REQUIRES 24VDC FROM OPUS BACK PLATE.
3. SENSOR MOUNTS TO SINGLE GANG WEATHER PROOF BELL BOX.

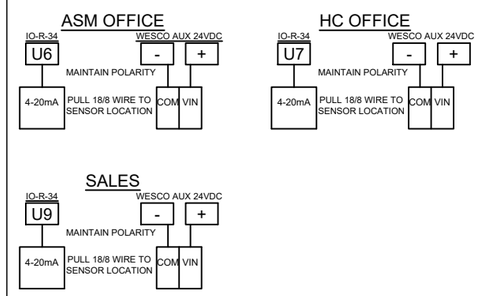

2-POSITION DAMPER ACTUATOR INTERFACE DETAIL

SIEMENS PART #

GQD126.1P

ACTUATOR TYPE

2-POSITION, (2) AUX SWITCHES

CONTROL VOLTAGE

24VDC FROM OPUS PANEL

INSTALL NOTE

1. MOUNT ACTUATOR TO DAMPER SHAFT (SUPPLIED BY OTHERS) AS DETAILED IN THE ACTUATOR MANUFACTURER INSTALL DOCUMENTS.
2. ACTUATOR STATUS SHOULD MAKE WHEN DAMPER IS 85% OPEN.

****AV ROOM ZONE DAMPER OPEN****

IO-R-34 : D1 — ENABLE — ACTUATOR : "1" SUPPLY LEAD
WESCO PANEL : -24VDC — ACTUATOR : "2" NUETRAL LEAD
IO-R-34 : U13 — STATUS — ACTUATOR : "S4" COM LEAD
IO-R-34 : 0V — ACTUATOR : "S6" NUETRAL LEAD

****EF-2 DAMPER CLOSE****

IO-R-34 : D2 — ENABLE — ACTUATOR : "1" SUPPLY LEAD
WESCO PANEL : -24VDC — ACTUATOR : "2" NUETRAL LEAD
IO-R-34 : U14 — STATUS — ACTUATOR : "S4" COM LEAD
IO-R-34 : 0V — ACTUATOR : "S6" NUETRAL LEAD

SECURITY INTERFACE DETAILS

CSUSA PART #

S.I.P.

INSTALL NOTE

1. S.I.P. IS 4 SQ BOX WITH CONTACTS SUPPLIED IN EMS PACKAGE.

SECURITY NOTES

1. DRY CONTACTS TO BE SUPPLIED BY INSTALLING ALARM COMPANY.
2. SECURITY ARMED POINT TO BE OPEN WHEN SYSTEM IS ARMED AND CLOSED WHEN DISARMED.
3. SECURITY ALARM POINT SHOULD BE NORMALLY CLOSED, OPEN ON ALARM.
4. SECURITY ALARM PANEL PROVIDED AND INSTALLED BY OTHERS.
5. WIRE FROM ALARM PANEL TO S.I.P. PANEL PROVIDED BY ALARM CONTRACTOR.
6. SECURITY INTERFACE PANEL (S.I.P.) PROVIDED BY CONTROLS CONTRACTOR AND INSTALL AND WIRED BY E.C.
7. INTERFACE TO SECURITY PANEL IS NOT INTENDED FOR USE AS A LIFE SAFETY DEVICE. THE ENERGY MANAGEMENT SYSTEM IS NOT INTENDED TO BE USED AS A LIFE SAFETY DEVICE.

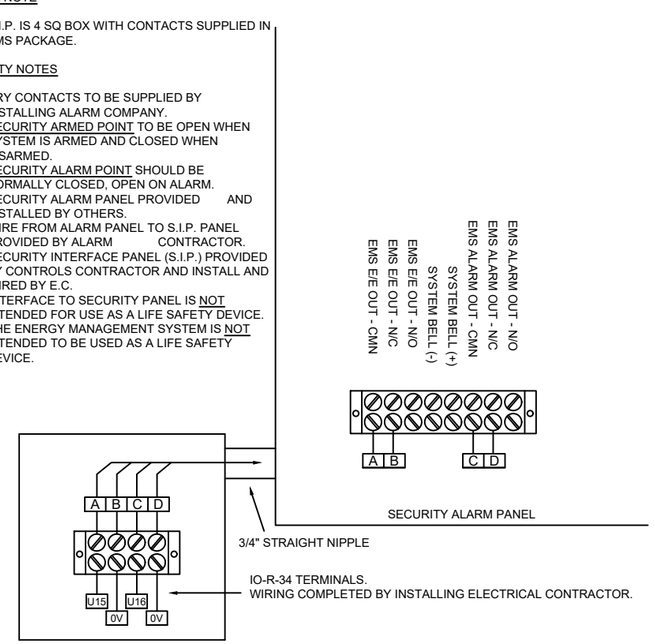

NO:	REVISION DESCRIPTION	DATE	BY
1	BAS BID SET	11/06/20	SMP

ISSUED FOR	ISSUED DATE
BID	11/06/20

COPYRIGHT NOTICE

© 2020 BY CSUSA, ACCU-TEMP, LLC. NO PART OF THIS DRAWING MAY BE TRANSMITTED, STORED IN ANY RETRIEVAL SYSTEM OR REPRODUCED, IN ANY WAY OR BY ANY MEANS, WITHOUT THE EXPRESS WRITTEN CONSENT OF CSUSA, STRATEGIC ACCOUNTS.

STAMP

ARCHITECT

BRR ARCHITECTURE
6700 ANTIOCH PLAZA, SUITE 300
MERRIAM, KS 66204
PHONE : (913) 262-9095
WEB : WWW.BRRARCH.COM

ENGINEER

HENDERSON ENGINEERS INC.
8345 LENEXA DRIVE, SUITE 300
LENEXA, KS 66214
PHONE : (913) 742-5000
WEB : WWW.HENDERSONENGINEERS.COM

OWNER

NIKE INC.
ONE BOWERMAN DRIVE
BEAVERTON, OR 97005
PHONE : (503) 671-6453
WEB : WWW.NIKE.COM

BUILDING AUTOMATION SYSTEM COMPANY

COMFORT SYSTEMS USA
STRATEGIC ACCOUNTS
2655 FORTUNE CIRCLE WEST, SUITE E
INDIANAPOLIS, IN 46241
PHONE: (317)638-5363
FAX: (317)264-3571

ENGR BY: P. SAWYER	PROJECT NO:
CHECKED BY: N/A	PROJECT MGR: J. OSKINS
DATE DRAWN: 11/06/20	CONTROL MFR: NOVAR

PROJECT ADDRESS

NIKE FACTORY STORE - UNITE

WATERFORD LAKES SHOPPING CENTER
ORLANDO, FL

SHEET INFORMATION

BUILDING AUTOMATION SYSTEM
WESCO GEAR
MAIN CONTROL PANEL
INPUT/OUTPUT INTERFACE DETAILS

SHEET NUMBER

BAS
2.3

WATTSTOPPER INSTALL GENERAL NOTES

1. DETAIL IS GENERIC AND SHOWN FOR REFERENCE ONLY. PRIOR TO INSTALL, REVIEW THE WATTSTOPPER SYSTEM SUBMITTAL FOR SITE SPECIFIC DETAILS.
2. SEE LIGHTING PLANS, EMS APPENDIX DRAWINGS AND WATTSTOPPER SUBMITTAL FOR EQUIPMENT LOCATIONS.
3. SEE COVER FOR WIRE SPECIFICATIONS.
4. WATTSTOPPER DEVICES ARE SUPPLIED IN THE BAS PACKAGE. SYSTEM WILL BE PROGRAMMED AND COMMISSIONED AT THE TIME OF BAS COMMISSIONING.
5. IT IS IDEAL TO MOUNT ALL ROOM CONTROLLERS IN A CENTRAL LOCATION. KEEP IN MIND THAT THE MAX CAT5 WIRE PULL BETWEEN DEVICES IS 300 FEET. IF WIRE PULLS ARE GOING TO BE OVER 300 FEET, THEN LOCATING THE ROOM CONTROLLER CLOSER TO THE NETWORKED DEVICES IS REQUIRED.

WATTSTOPPER INSTALL GENERAL NOTES

6. MAXIMUM DLM NETWORK TOTAL WIRE PULL IS 1000 FEET. IF MORE THAN 1000 FEET WILL BE REQUIRED BETWEEN ALL DEVICES IN THE NETWORK, THEN THE SYSTEM MUST BE SPLIT INTO MULTIPLE NETWORKS AND TIED TOGETHER VIA A NETWORK MANAGER (JACE CONTROLLER)
7. DURING THE INSTALL OF THE WATTSTOPPER SYSTEM, PRINT OFF A LARGE PRINT OF THE LIGHTING PLAN DEDICATED FOR USE WITH THE LIGHTING SYSTEM INSTALL. AS THE DEVICES ARE INSTALLED, PULL THE SERIAL NUMBER STICKER OFF EACH DEVICE AND PLACE IT ON THE FLOOR PLAN LAYOUT NEXT TO THE LOCATION OF THAT PARTICULAR DEVICE ON THE PLAN. THIS WILL BE USED FOR TROUBLE SHOOTING, PROGRAMMING, AND COMMISSIONING DURING THE START-UP OF THE BAS SYSTEM. FAILURE TO PERFORM THIS PRIOR TO INSTALL WILL RESULT IN DELAYED LIGHTING SYSTEM COMMISSIONING AND POSSIBLE CHANGE ORDER FOR A RETURN TRIP.

TROUBLE SHOOTING TIPS

1. CHECK ROOM CONTROLLER STATUS LIGHT

IF LIGHT IS FLASHING RED : CONTROLLER IS OPERATING AS IT SHOULD BE
IF LIGHT IS SOLID RED : CONTROLLER IS NOT FUNCTIONING PROPERLY.

IF STATUS LIGHT IS SOLID, DO THE FOLLOWING

UNPLUG ALL CABLES FROM ROOM CONTROLLER, DOES THE LIGHT START BLINKING AFTER 30 SECONDS? IF SO, THEN GO TO NEXT STEP. IF LIGHTS STAYS SOLID, CONTROLLER NEEDS REPLACED.

START TO PLUG EACH CABLE IN ONE AT A TIME. WAIT 30 SECONDS BETWEEN PLUGGING EACH CABLE IN. IF LIGHT BLINKS WITH CABLE IN, PLUG IN THE NEXT CABLE. IF LIGHT STAYS SOLID AFTER CABLE WAS PLUGGED IN, THEN ISSUE IS WITH THE CABLE. CONTINUE TO CHECK EACH CABLE AND REPAIR AS NEEDED UNTIL CONTROLLER IS FUNCTIONING WITH ALL CABLES.

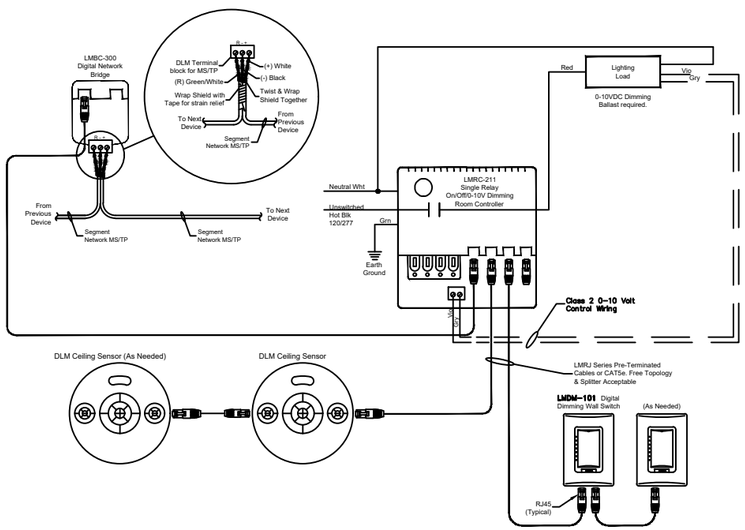

TYPICAL SINGLE ZONE CONTROL

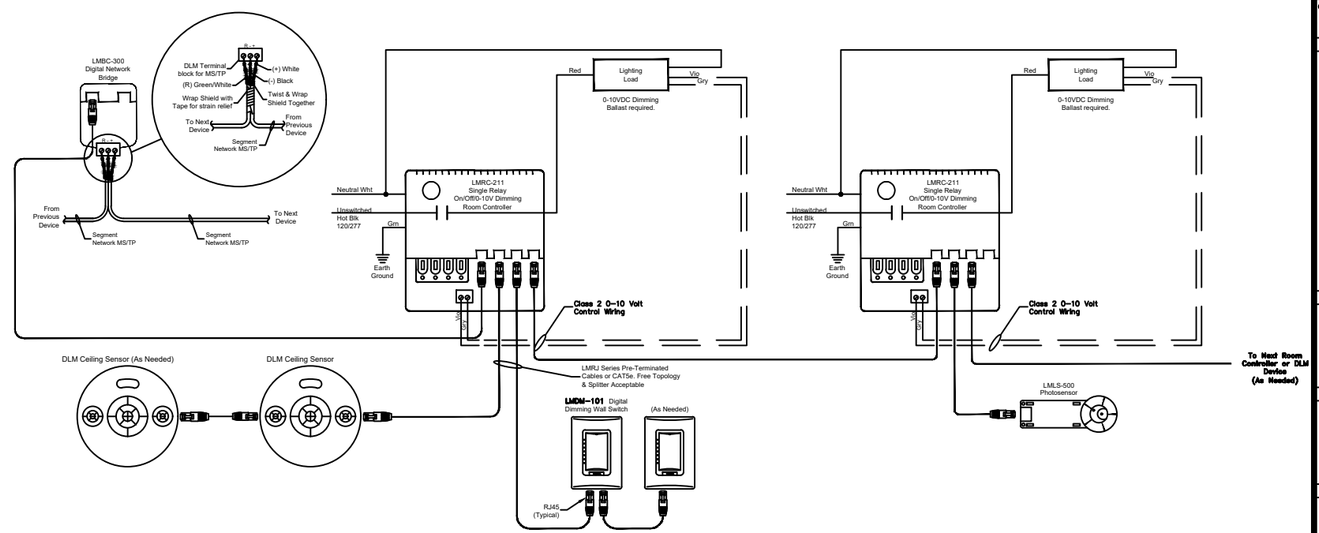

TYPICAL MULTI ZONE CONTROL W/ DAYLIGHT HARVESTING

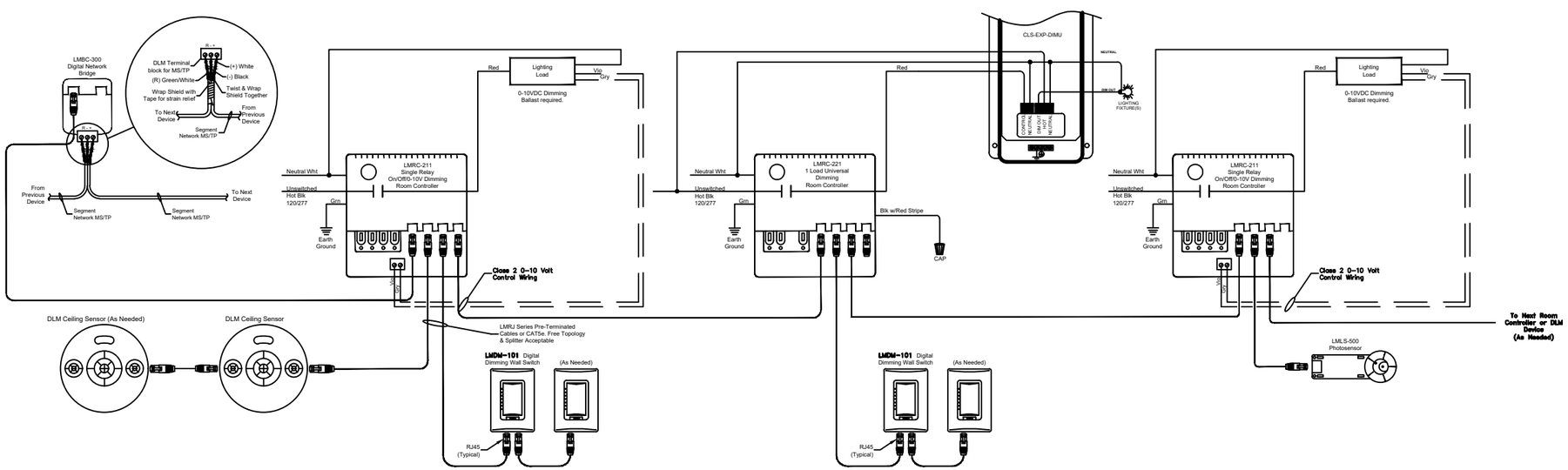

TYPICAL MULTI ZONE CONTROL W/ DAYLIGHT HARVESTING AND ELV TRACK LIGHTING

NO:	REVISION DESCRIPTION	DATE	BY
1	BAS BID SET	11/06/20	SMP
2			
3			
4			
5			
6			
7			
8			
9			
10			
11			
12			
13			
14			
15			
16			

ISSUED FOR	ISSUED DATE
BID	11/06/20

COPYRIGHT NOTICE

© 2020 BY CSUSA, ACCU-TEMP, LLC. NO PART OF THIS DRAWING MAY BE TRANSMITTED, STORED IN ANY RETRIEVAL SYSTEM OR REPRODUCED, IN ANY WAY OR BY ANY MEANS, WITHOUT THE EXPRESS WRITTEN CONSENT OF CSUSA, STRATEGIC ACCOUNTS.

STAMP

ARCHITECT

BRR ARCHITECTURE
6700 ANTIOCH PLAZA, SUITE 300
MERRIAM, KS 66204
PHONE : (913) 262-9095
WEB : WWW.BRRARCH.COM

ENGINEER

HENDERSON ENGINEERS INC.
8345 LENEXA DRIVE, SUITE 300
LENEXA, KS 66214
PHONE : (913) 742-5000
WEB : WWW.HENDERSONENGINEERS.COM

OWNER

NIKE INC.
ONE BOWERMAN DRIVE
BEAVERTON, OR 97005
PHONE : (503) 671-6453
WEB : WWW.NIKE.COM

BUILDING AUTOMATION SYSTEM COMPANY

COMFORT SYSTEMS USA
STRATEGIC ACCOUNTS
2655 FORTUNE CIRCLE WEST, SUITE E
INDIANAPOLIS, IN 46241
PHONE: (317)638-5363
FAX: (317)264-3571

ENGR BY: P. SAWYER	PROJECT NO:
CHECKED BY: N/A	PROJECT MGR: J. OSKINS
DATE DRAWN: 11/06/20	CONTROL MFR: NOVAR

PROJECT ADDRESS

NIKE FACTORY STORE - UNITE

WATERFORD LAKES SHOPPING CENTER
ORLANDO, FL

SHEET INFORMATION

BUILDING AUTOMATION SYSTEM
GENERIC WATTSTOPPER SYSTEM
WIRING DETAIL

SHEET NUMBER

BAS
3.1

FACTORY INSTALLED CARRIER RTU OPEN

REPLACEMENT FACTORY PARTS

(1)	WIRING HARNESS KIT	: PART # OPN-RTUHRN
(1)	CONTROL BOARD	: PART # OPN-RTUM
(1)	OUTDOOR TEMP SENSOR	: PART # A/CP-BP-20'CL2P
(1)	OUTDOOR SENSOR CLIP	: PART # A/MOUNTING CLIP-1/4"
(1)	DUCT TEMP SENSOR	: PART # A/CP-DO-4

FIELD INSTALLED PARTS (REMOVE PARTS NOT NEEDED)

(1)	SPACE TEMP/C02/RH SENSOR	: PART # ZS2-HC-CAR

GENERAL NOTES

1. RTU OPEN BOARD SHOULD BE FACTORY INSTALLED AND WIRED IN UNIT.

   BOARD IS FACTORY WIRED TO UNIT ECONOMIZER ACTUATOR AS DETAILED.

   BOARD IS FACTORY WIRED TO THE UNIT THERMOSTAT TERMINALS.

   OUTDOOR AIR TEMPERATURE AND SUPPLY DUCT TEMPERATURE SENSORS ARE FACTORY INSTALLED AND WIRED TO BOARD.

   REVERSING VALVE, POWER EXHAUST AND DEHUMIDIFICATION CONTROL SHOULD ALL BE FACTORY WIRED TO THE BOARD IF THEY ARE FACTORY INSTALLED OPTIONS.

2. SPACE TEMPERATURE SENSOR IS SUPPLIED IN BAS PACKAGE AND FIELD INSTALLED BY BAS INSTALLING CONTRACTOR.

   FIELD VERIFY EXACT SENSOR TYPE REQUIRED FOR EACH UNIT. DEPENDING ON FUNCTION OF UNIT A STANDARD TEMPERATURE SENSOR OR COMBINATION COMMUNICATING RNET SENSOR MIGHT BE REQUIRED.

FIELD SETTINGS AND TERMINATION NOTES

1. POWER UNIT DOWN PRIOR TO FIELD INTERFACING AND SETTING OF SWITCHES.
2. WIRE THE MS/TP NETWORK TO TERMINAL BLOCK J19.
3. SET THE CONTROLLERS ADDRESS USING THE ROTARY SWITCHES SW1 AND SW2. ADDRESS SHOULD MATCH THE UNIT NUMBER (EXAMPLE BELOW = 1). SEE COMMUNICATIONS RISER DIAGRAM FOR EXACT ADDRESSING IF DIFFERENT THAN UNIT NUMBER.

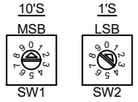

4. SET THE COMMUNICATION PROTOCOL AND BAUD RATE USING DIP SWITCH SW3.

   SWITCHES ON : 1,2 & 4
   SWITCHES OFF : 3,5 & 6
   SWITCHES NOT USED : 7 & 8

5. AFTER ALL WIRING IS COMPLETE AND SWITCH SETTINGS ARE CONFIRMED. POWER UP UNIT AND VERIFY PROPER OPERATION.

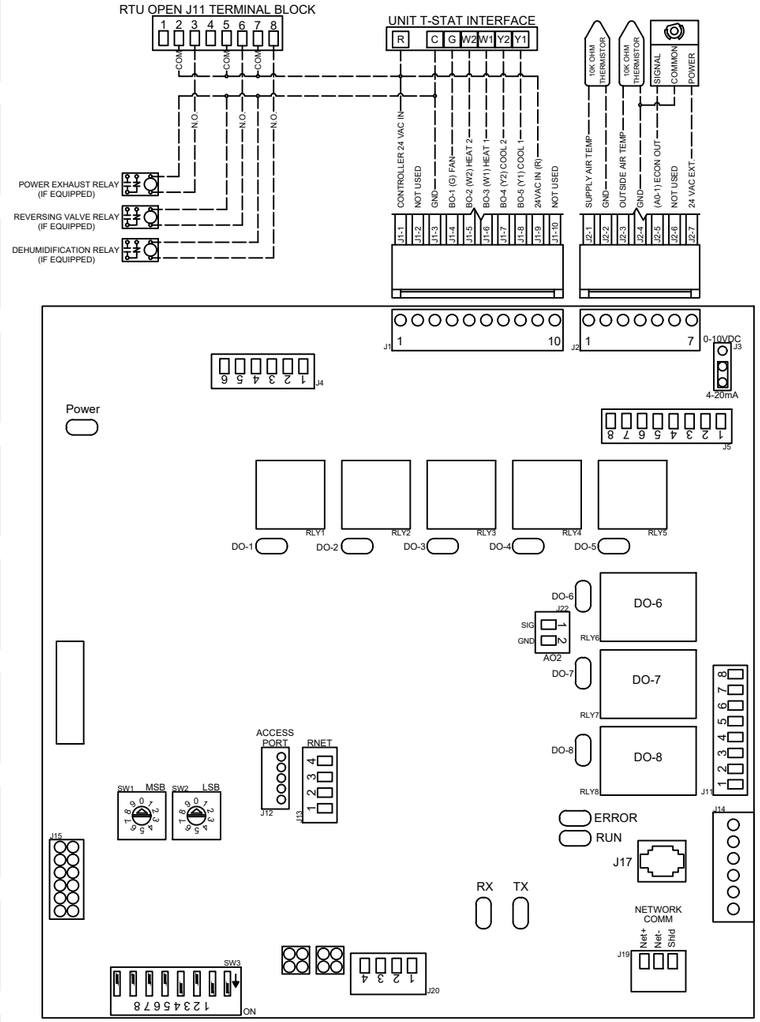

RTU OPEN BOARD BACNET MS/TP WIRING DETAIL

INTERFACE NOTES

MAINTAIN POLARITY AS SHOWN IN THIS DETAIL OR BOARDS WILL NOT COMMUNICATE.

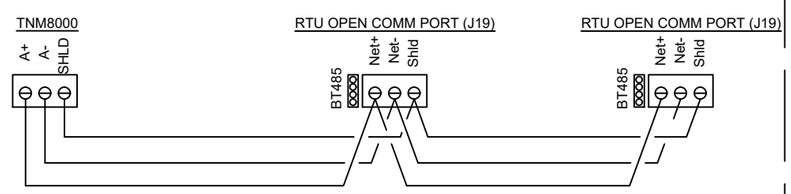

CARRIER ZS COMBO ZONE SENSOR

SENSOR TYPE

CARRIER RNET

NOTES

1. POWER DOWN UNIT PRIOR TO INSTALLATION OF SENSOR!!!!!!
2. THE RNET CABLE IS WIRED TO THE CONTROLLER. THE SHIELD WIRE AND THE GROUND WIRE SHOULD BE INSERTED INTO THE CONTROLLERS "GND" TERMINAL.
3. SENSOR MOUNTS TO FRONT OF SINGLE GANG BOX. IF MOUNTED ON A COLUMN OR POLE, INSTALL IN A WEATHER PROOF SINGLE GANG BELL BOX.
4. MAINTAIN POLARITY AS SHOWN IN THIS DETAIL.
5. LEAVE DIP SWITCH SETTINGS ON SENSOR AS DEFAULT
6. ONCE SENSOR IS INSTALLED POWER UNIT BACK UP AND VERIFY OPERATION.
7. IF REQUIRED, CALIBRATE SENSOR USING CARRIER I-VU SOFTWARE AND USB CABLE.

OPERATION NOTES

1. ZSP2 SENSOR PROVIDES OCCUPANCY OVERRIDE AND SET POINT ADJUST TO THE OCCUPANT.
2. ZS2 SENSOR PROVIDES TEMP, RH, AND CO2 READINGS TO CONTROLLER ONLY

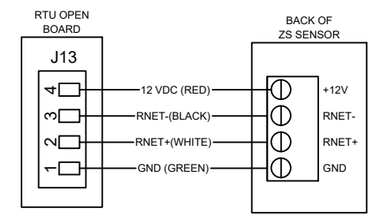

NO:	REVISION DESCRIPTION	DATE	BY
1	BAS BID SET	11/06/20	SMP
2			
3			
4			
5			
6			
7			
8			
9			
10			
11			
12			
13			
14			
15			
16			
17			
18			

ISSUED FOR	ISSUED DATE
BID	11/06/20

COPYRIGHT NOTICE

© 2020 BY CSUSA, ACCU-TEMP, LLC. NO PART OF THIS DRAWING MAY BE TRANSMITTED, STORED IN ANY RETRIEVAL SYSTEM OR REPRODUCED, IN ANY WAY OR BY ANY MEANS, WITHOUT THE EXPRESS WRITTEN CONSENT OF CSUSA, STRATEGIC ACCOUNTS.

STAMP

ARCHITECT

BRR ARCHITECTURE
6700 ANTIOCH PLAZA, SUITE 300
MERRIAM, KS 66204
PHONE : (913) 262-9095
WEB : WWW.BRRARCH.COM

ENGINEER

HENDERSON ENGINEERS INC.
8345 LENEXA DRIVE, SUITE 300
LENEXA, KS 66214
PHONE : (913) 742-5000
WEB : WWW.HENDERSONENGINEERS.COM

OWNER

NIKE INC.
ONE BOWERMAN DRIVE
BEAVERTON, OR 97005
PHONE : (503) 671-6453
WEB : WWW.NIKE.COM

BUILDING AUTOMATION SYSTEM COMPANY

COMFORT SYSTEMS USA
STRATEGIC ACCOUNTS
2655 FORTUNE CIRCLE WEST, SUITE E
INDIANAPOLIS, IN 46241
PHONE: (317)638-5363
FAX: (317)264-3571

ENGR BY: P. SAWYER	PROJECT NO:
CHECKED BY: N/A	PROJECT MGR: J. OSKINS
DATE DRAWN: 11/06/20	CONTROL MFR: NOVAR

PROJECT ADDRESS

NIKE FACTORY STORE - UNITE

WATERFORD LAKES SHOPPING CENTER
ORLAND, FL

SHEET INFORMATION

BUILDING AUTOMATION SYSTEM
CARRIER FACTORY INSTALLED
RTU OPEN BOARD INTERFACE DETAIL

SHEET NUMBER

BAS
4.1

DETAIL TO BE RELEASED ON NEXT ISSUE

NO:	REVISION DESCRIPTION	DATE	BY
1	BAS BID SET	11/06/20	SMP
2			
3			
4			
5			
6			
7			
8			
9			
10			
11			
12			
13			
14			
15			
16			
17			
18			

ISSUED FOR	ISSUED DATE
BID	11/06/20

COPYRIGHT NOTICE

© 2020 BY CSUSA, ACCU-TEMP, LLC. NO PART OF THIS DRAWING MAY BE TRANSMITTED, STORED IN ANY RETRIEVAL SYSTEM OR REPRODUCED, IN ANY WAY OR BY ANY MEANS, WITHOUT THE EXPRESS WRITTEN CONSENT OF CSUSA, STRATEGIC ACCOUNTS.

STAMP

ARCHITECT

BRR ARCHITECTURE
6700 ANTIOCH PLAZA, SUITE 300
MERRIAM, KS 66204
PHONE : (913) 262-9095
WEB : WWW.BRRARCH.COM

ENGINEER

HENDERSON ENGINEERS INC.
8345 LENEXA DRIVE, SUITE 300
LENEXA, KS 66214
PHONE : (913) 742-5000
WEB : WWW.HENDERSONENGINEERS.COM

OWNER

NIKE INC.
ONE BOWERMAN DRIVE
BEAVERTON, OR 97005
PHONE : (503) 671-6453
WEB : WWW.NIKE.COM

BUILDING AUTOMATION SYSTEM COMPANY

COMFORT SYSTEMS USA
STRATEGIC ACCOUNTS
2655 FORTUNE CIRCLE WEST, SUITE E
INDIANAPOLIS, IN 46241
PHONE: (317)638-5363
FAX: (317)264-3571

ENGR BY: P. SAWYER	PROJECT NO:
CHECKED BY: N/A	PROJECT MGR: J. OSKINS
DATE DRAWN: 11/06/20	CONTROL MFR: NOVAR

PROJECT ADDRESS

NIKE FACTORY STORE - UNITE

WATERFORD LAKES SHOPPING CENTER
ORLANDO, FL

SHEET INFORMATION

BUILDING AUTOMATION SYSTEM
CARRIER FACTORY INSTALLED
SYSTEM VU CONTROLS
INTERFACE DETAILS

SHEET NUMBER

BAS
4.2

MASTER CONTROL BOARD

NOTES

IN COMMUNICATINS CABLES ARE INTERFACED CORRECTLY, THE "TX" AND "RX" LED'S WILL BE LIT AND FLASHING.

FACTORY INSTALLED 24VAC TRANSFORMER ON DIFFUSERS IS NOT USED. DIFFUSERS GET POWER FROM PRICE POWER MODULE (PPM) UNLESS NOTED.

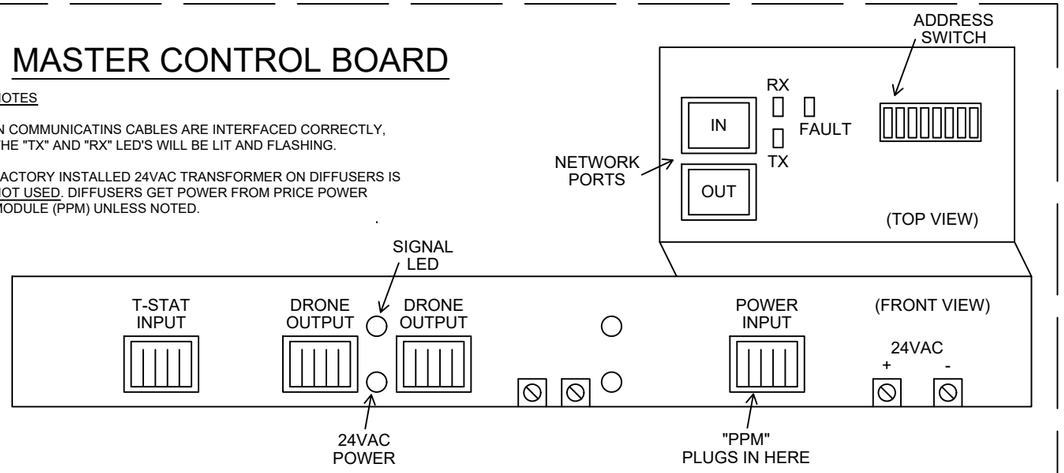

DRONE CONTROL BOARD

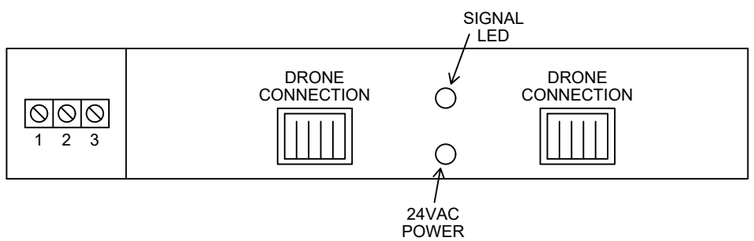

ADDRESS

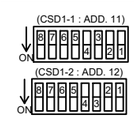

PRICE POWER MODULE (PPM)

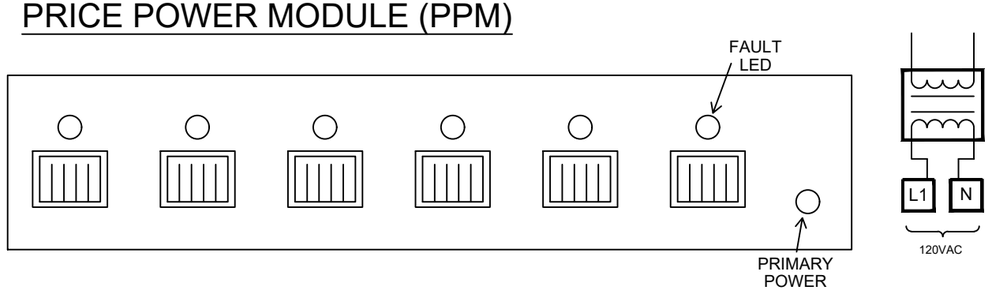

NOTES

1. MOUNT PPM IN CEILING IN A LOCATION THAT WILL BE EASY TO GET TO. EACH MASTER CONTROL BOARD WILL RECEIVE POWER FROM THIS MODULE.
2. VERIFY PPM IS POWERED WITH 120VAC. PRIMARY POWER LED WILL BE LIT.
3. RUN SUPPLIED CABLE PART# C35 FROM PPM TO EACH MASTER DIFFUSER AND PLUG ONE END INTO ANY ONE OF THE PLUGS ON THE PPM AND PLUG THE OTHER END INTO THE "POWER INPUT" ON THE MASTER DIFFUSER. REPEAT FOR ALL MASTER DIFFUSERS. (DRONE DIFFUSER DO NOT REQUIRE POWER FROM "PPM")
4. MOUNT ROOM THERMOSTAT AT 48" ABOVE FLOOR (FIELD VERIFY).
5. TAKE SUPPLIED CAT 5 NETWORK CABLE AND RUN IT FROM THERMOSTAT LOCATION TO THE CONTROL BOARD ON THE MASTER DIFFUSER AND INSERT CABLE END INTO "T-STAT INPUT".
6. SKIP STEP 6 & 7 IF NO DRONE DIFFUSER - TAKE SUPPLIED CABLE PART# C35 AND RUN IT FROM THE MASTER DIFFUSER CONTROL BOARD TO CLOSET DRONE DIFFUSER. PLUG THE END AT THE MASTER CONTROL BOARD INTO THE "DRONE OUTPUT" AND PLUG THE OTHER END INTO THE "DRONE CONNECTION" ON THE DRONE CONTROL BOARD.
7. FOR TWO OR MORE DRONE DIFFUSER, TAKE SUPPLIED CABLE PART# C35 AND RUN TO THE NEXT DRONE DIFFUSER. PLUG THE END AT THE FIRST DRONE DIFFUSER INTO THE SECOND "DRONE CONNECTION" AND PLUG THE END AT THE NEW DRONE DIFFUSER INTO "DRONE CONNECTION".
8. FOR CONTROLS INTERFACE VIA BACNET. EACH DIFFUSER IS SUPPLIED WITH A CAT5 NETWORK CABLE. RUN THE CAT5 CABLE BETWEEN EACH MASTER DIFFUSER AND PLUG INTO "RJ45 OUT" ON FIRST UNIT IN THE LOOP AND "RJ45 IN" ON SECOND UNIT IN LOOP. THEN PULL A CAT5 FROM OPUS PANEL TO THE FIRST UNIT IN LOOP, TERMINATE WITH "RJ45" (TYPICAL ETHERNET PIN OUT) AND PLUG INTO "RJ45 IN" PLUGS FOUND ON TOP OF EACH MASTER CONTROL BOARD. AT OPUS PANEL, TERMINATE ORANGE/WHITE WIRE TO COMM PORT "+" AND TERMINATE ORANGE WIRE TO COMM PORT "-".

NO:	REVISION DESCRIPTION	DATE	BY
1	BAS BID SET	11/06/20	SMP

ISSUED FOR	ISSUED DATE
BID	11/06/20

COPYRIGHT NOTICE

© 2020 BY CSUSA, ACCU-TEMP, LLC. NO PART OF THIS DRAWING MAY BE TRANSMITTED, STORED IN ANY RETRIEVAL SYSTEM OR REPRODUCED, IN ANY WAY OR BY ANY MEANS, WITHOUT THE EXPRESS WRITTEN CONSENT OF CSUSA, STRATEGIC ACCOUNTS.

STAMP

ARCHITECT

BRR ARCHITECTURE
6700 ANTIOCH PLAZA, SUITE 300
MERRIAM, KS 66204
PHONE : (913) 262-9095
WEB : WWW.BRRARCH.COM

ENGINEER

HENDERSON ENGINEERS INC.
8345 LENEXA DRIVE, SUITE 300
LENEXA, KS 66214
PHONE : (913) 742-5000
WEB : WWW.HENDERSONENGINEERS.COM

OWNER

NIKE INC.
ONE BOWERMAN DRIVE
BEAVERTON, OR 97005
PHONE : (503) 671-6453
WEB : WWW.NIKE.COM

BUILDING AUTOMATION SYSTEM COMPANY

COMFORT SYSTEMS USA
STRATEGIC ACCOUNTS
2655 FORTUNE CIRCLE WEST, SUITE E
INDIANAPOLIS, IN 46241
PHONE: (317)638-5363
FAX: (317)264-3571

ENGR BY: P. SAWYER	PROJECT NO:
CHECKED BY: N/A	PROJECT MGR: J. OSKINS
DATE DRAWN: 11/06/20	CONTROL MFR: NOVAR

PROJECT ADDRESS

NIKE FACTORY STORE - UNITE

WATERFORD LAKES SHOPPING CENTER
ORLANDO, FL

SHEET INFORMATION

BUILDING AUTOMATION SYSTEM
PRICE MODULATING DIFFUSER
INTERFACE DETAILS

SHEET NUMBER

BAS
4.3

IFS FACTORY INSTALL NOTES

1. MOUNT METER TO FRONT OF GEAR IN A LOCATION THE POWER AND CT WIRES CAN BE ROUTED TO AND THE DOOR STILL BE ABLE TO BE OPENED FOR FIELD WORK.
2. METER IS CAPABLE OF REFERENCING (2) SEPARATE VOLTAGES. POWER METER OFF OF DEDICATED 3 POLE 20 AMP BREAKER IN PANEL "MDP". IF A TRANSFORMER IS USED TO STEP DOWN POWER FROM 480/277V TO 208/120V THEN PROVIDED A SECOND 3 POLE 20 AMP BREAKER IN PANEL "A" AND WIRE BACK TO METER TO PROVIDE A SECOND VOLTAGE REFERENCE. ***LABEL BREAKER(S) AS METER DISCONNECT***ADD NOTE IF (2) BREAKERS ARE USED THAT BOTH BREAKERS NEED SHUT OFF TO SHUTDOWN METER***
3. PLACE CT'S IN GENERAL LOCATION OF GEAR FOR MONITORING OF EACH PIECE OF EQUIPMENT (EC TO WRAP CT'S AROUND CIRCUIT ONCE INSTALLED) AS SCHEDULED AND WIRE CT'S BACK TO METER. POLARITY BETWEEN CT AND METER CHANNEL MUST BE MAINTAINED FOR PROPER OPERATION. (SEE CT INSTALL NOTES BELOW AND REFERENCE NEXT PAGE)

CT POSITIVE	TO	METER CHANNEL POSITIVE
CT NEGATIVE	TO	METER CHANNEL NEGATIVE
CT SHIELD	TO	METER CHANNEL SHIELD

FIELD INSTALLED GENERAL NOTES

1. !!!!!!!!ALL WORK SHOULD BE PERFORMED BY A QUALIFIED ELECTRICIAN USING PROPER SAFETY EQUIPMENT!!!!!!!!
2. EC (ELECTRICAL CONTRACTOR) REQUIRED TO WRAP CT'S AROUND CIRCUIT FOR MONITORED EQUIPMENT AS DESCRIBED IN THE ELECTRICAL DRAWINGS AND TABLE IN THIS DRAWING SET. CT SHOULD BE FACTORY INSTALLED BY HILL PHOENIX IN THE GENERAL LOCATION OF THE CIRCUIT IN THE GEAR AND WIRED BACK TO THE DENT PS48 KW METER FACTORY MOUNTED TO THE FRONT OF THE GEAR READY FOR EC TO WRAP CT AROUND CIRCUIT ONCE ALL FIELD WIRING IS COMPETE.

CT INSTALL NOTES

CT'S SHOULD BE INSTALLED AND WIRED TO METER BY HILL PHOENIX
CT'S WRAPPED AROUND CIRCUIT BY EC IN FIELD
SEE TABLE ON NEXT PAGE FOR CHANNEL AND ELEMENT ASSIGNMENTS

SEE DETAILS TO THE RIGHT THAT COVER MULTIPLE SCENARIOS FOR MONITORING EQUIPMENT.

1. 4-WIRE, 3-PHASE, WYE LOAD - L1-N, L2-N, L3-N
2. 3-WIRE, 3-PHASE DELTA
3. 2-WIRE, SINGLE PHASE LOAD (ANY CHANNEL AS LONG AS THE ELEMENT THE CHANNEL IS LOCATED ON IS ASSIGNED TO THE PROPER VOLTAGE REFERENCE)

SPLIT CORE CT INSTALLATION

1. OPEN THE CT BY HOLDING ON TO THE REMOVABLE LEG AND PULLING IT APART.
2. CONNECT CT AROUND THE CIRCUIT TO BE MEASURED.
3. RE-CONNECT THE REMOVABLE LEG. THE CIRCUIT SHOULD BE IN THE INSIDE OF THE CT WINDOW. MAKE SURE THE CT LEG CORE ALIGNS WITH THE MAIN HOUSING CORE.
4. REPEAT SETS 1-3 IF YOU9 ARE USING MORE THAN ONE CT.
5. CONNECT THE "WHITE WIRE LEAD" ON THE CT TO THE POSITIVE TERMINAL OF THE CHANNEL ON THE CORRECT ELEMENT OF THE DENT PS48 METER.
6. CONNECT THE "BLACK WIRE LEAD" ON THE CT TO THE NEGATIVE TERMINAL OF THE CHANNEL ON THE CORRECT ELEMENT OF THE DENT PS48 METER.

ROCOIL CT INSTALLATION (BLUE ROPE CT)

1. OPEN THE CT BY SQUEEZING THE CONNECTOR AND PULLING APART.
2. CONNECT CT AROUND THE CIRCUIT TO BE MEASURED.
3. PUSH THE CONNECTOR BACK TOGETHER. THE CIRCUIT SHOULD BE IN THE INSIDE OF THE CT WINDOW.
4. REPEAT STEPS 1-3 IF YOU ARE USING MORE THAN ONE CT.
5. CONNECT THE "BROWN WIRE LEAD" ON THE CT TO THE NEGATIVE TERMINAL OF THE CHANNEL ON THE CORRECT ELEMENT OF THE DENT PS48 METER.
6. CONNECT THE "WHITE WIRE LEAD" ON THE CT TO THE POSITIVE TERMINAL OF THE CHANNEL ON THE CORRECT ELEMENT OF THE DENT PS48 METER.

PROGRAMMING NOTES

1. METER TO BE CONFIGURED USING THE VIEWPOINT HD SOFTWARE AND USB CABLE.

COMMUNICATION NOTES

1. METER COMMUNICATES TO BAS SYSTEM VIA BACNET OVER IP.
2. CONNECT ETHERNET PORT (LOCATED ABOVE TOUCH SCREEN) VIA CAT5 PATCH CABLE TO BAS SWITCH INSTALLED ON BAS BACKPLATE IN CONTROLS SECTION OF THE GEAR.

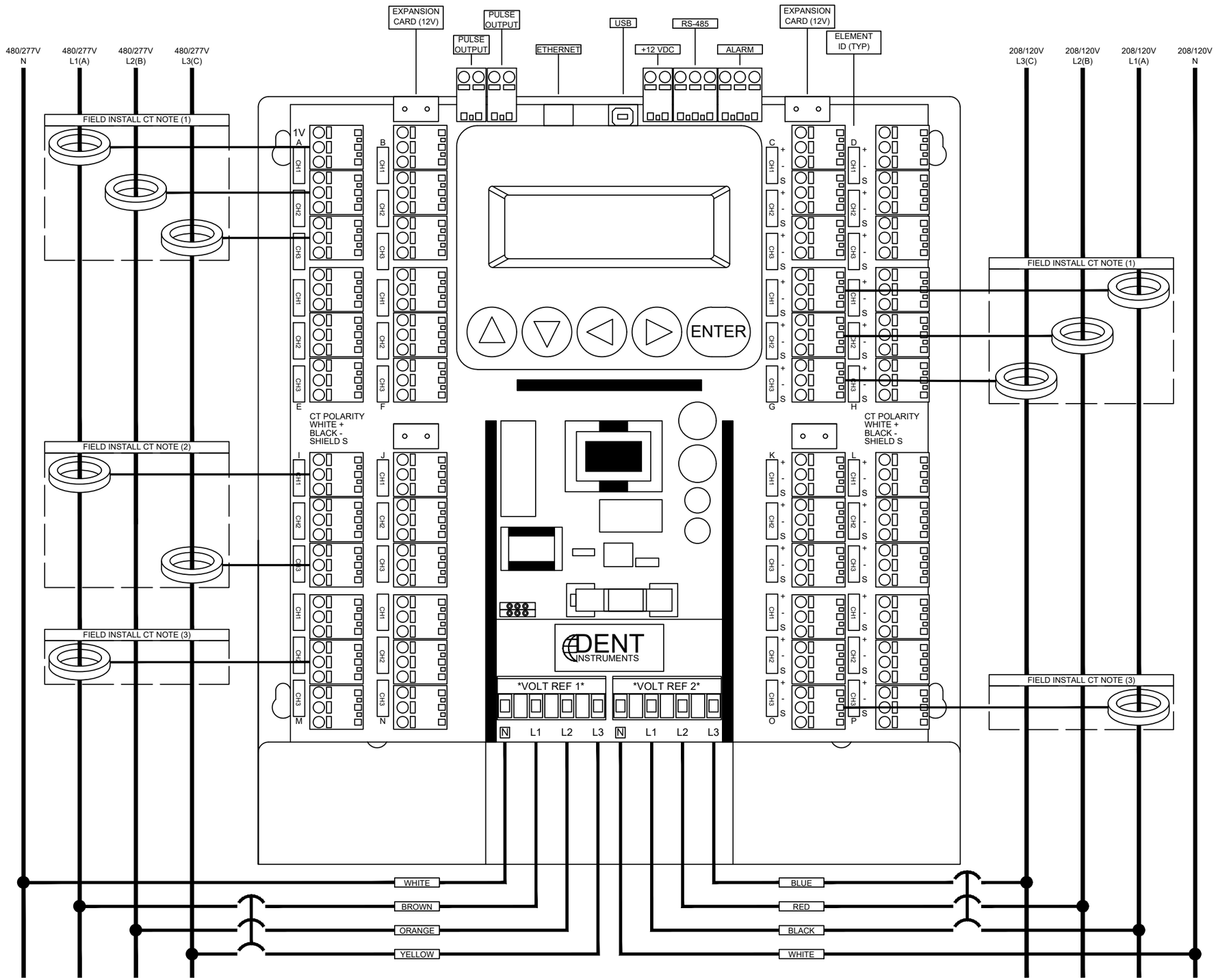

NO:	REVISION DESCRIPTION	DATE	BY
1	BAS BID SET	11/06/20	SMP
2			
3			
4			
5			
6			
7			
8			
9			
10			
11			
12			
13			
14			
15			
16			
17			
18			
19			
20			

ISSUED FOR	ISSUED DATE
BID	11/06/20

COPYRIGHT NOTICE

© 2020 BY CSUSA, ACCU-TEMP, LLC. NO PART OF THIS DRAWING MAY BE TRANSMITTED, STORED IN ANY RETRIEVAL SYSTEM OR REPRODUCED, IN ANY WAY OR BY ANY MEANS, WITHOUT THE EXPRESS WRITTEN CONSENT OF CSUSA, STRATEGIC ACCOUNTS.

STAMP

ARCHITECT

BRR ARCHITECTURE
6700 ANTIOCH PLAZA, SUITE 300
MERRIAM, KS 66204
PHONE : (913) 262-9095
WEB : WWW.BRRARCH.COM

ENGINEER

HENDERSON ENGINEERS INC.
8345 LENEXA DRIVE, SUITE 300
LENEXA, KS 66214
PHONE : (913) 742-5000
WEB : WWW.HENDERSONENGINEERS.COM

OWNER

NIKE INC.
ONE BOWERMAN DRIVE
BEAVERTON, OR 97005
PHONE : (503) 671-6453
WEB : WWW.NIKE.COM

BUILDING AUTOMATION SYSTEM COMPANY

COMFORT SYSTEMS USA
STRATEGIC ACCOUNTS
2655 FORTUNE CIRCLE WEST, SUITE E
INDIANAPOLIS, IN 46241
PHONE: (317)638-5363
FAX: (317)264-3571

ENGR BY: P. SAWYER	PROJECT NO:
CHECKED BY: N/A	PROJECT MGR: J. OSKINS
DATE DRAWN: 11/06/20	CONTROL MFR: NOVAR

PROJECT ADDRESS

NIKE FACTORY STORE - UNITE

WATERFORD LAKES SHOPPING CENTER
ORLANDO, FL

SHEET INFORMATION

BUILDING AUTOMATION SYSTEM
KW METER INTERFACE DETAIL

SHEET NUMBER

BAS
5.1

DENT PS48 PROGRAMMING AND WIRING GUIDE

VOLTAGE REFERENCE 1:		MDP-37,39,41 : 480Y/277V											L1-77,79,81 : 208Y/120V		:VOLTAGE REFERENCE 2	
EQUIPMENT MONITORED	CIRCUIT	SERVICE TYPE	VOLTAGE REFERENCE	AMPS	CT PART NUMBER	VOLTAGE REFERNCE	ASSIGNED ELEMENT	CT CHANEL	ASSIGNED ELEMENT	VOLTAGE REFERNCE	CT PART NUMBER	AMPS	VOLTAGE INPUT	SERVICE TYPE	CIRCUIT	EQUIPMENT MONITORED
	INCOMING				CT-R16-A4-U	L1-L2		CH-1		L1-L2	CT-R16-A4-U				INCOMING	
PANEL MDP	UTILITY	4-WIRE, 3-PHASE (WYE)	V INPUT 1 : 480Y/277V	400	CT-R16-A4-U	L2-L3	A	CH-2	C	L2-L3	CT-R16-A4-U	150	V INPUT 2 : 208Y/120V	4-WIRE, 3-PHASE (WYE)	FEED FROM	PANEL L1
	FEEDS				CT-R16-A4-U	L3-L1		CH-3		L3-L1	CT-R16-A4-U				TRANSFORMER	
						L1-L2		CH-1		L1-L2	CT-R16-A4-U				INCOMING	
		DISABLE ELEMENT				L2-L3	B	CH-2	D	L2-L3	CT-R16-A4-U	150	V INPUT 2 : 208Y/120V	4-WIRE, 3-PHASE (WYE)	FEED FROM	PANEL L2
						L3-L1		CH-3		L3-L1	CT-R16-A4-U				TRANSFORMER	
						L1-L2		CH-1		L1-L2						
		DISABLE ELEMENT				L2-L3	E	CH-2	G	L2-L3				DISABLE ELEMENT		
						L3-L1		CH-3		L3-L1						
						L1-L2		CH-1		L1-L2						
		DISABLE ELEMENT				L2-L3	F	CH-2	H	L2-L3				DISABLE ELEMENT		
						L3-L1		CH-3		L3-L1						
						L1-L2		CH-1		L1-L2						
		DISABLE ELEMENT				L2-L3	I	CH-2	K	L2-L3				DISABLE ELEMENT		
						L3-L1		CH-3		L3-L1						
						L1-L2		CH-1		L1-L2						
		DISABLE ELEMENT				L2-L3	J	CH-2	L	L2-L3				DISABLE ELEMENT		
						L3-L1		CH-3		L3-L1						
						L1-L2		CH-1								
		DISABLE ELEMENT				L2-L3	M	CH-2	O					DISABLE ELEMENT		
						L3-L1		CH-3								
						L1-L2		CH-1		L1-N						
		DISABLE ELEMENT				L2-L3	N	CH-2	P	L2-N				DISABLE ELEMENT		
						L3-L1		CH-3		DISABLE CT						

METER INSTALL BILL OF MATERIAL

PART #	CT AMP RATING	CT USEFUL CURRENT RANGE	CT WINDOW SIZE	DETAILS/CT DEMENSIONS	QTY
CT-HSC-020-U	20	0.25A TO 40A	0.4"	1.64"(T) x 1.16"(W) x 1.04" (D)	0
CT-HSC-050-U	50	0.25A TO 80A	0.4"	1.64"(T) x 1.16"(W) x 1.04" (D)	0
CT-HMC-0100-U	100	1A TO 200A	1.0"	2.76"(T) x 2.00"(W) x 1.52"(D)	0
CT-HMC-0200-U	200	1A TO 300A	1.0"	2.76"(T) x 2.00"(W) x 1.52"(D)	0
CT-SCS-0050-U	50	5A TO 65A	0.75"	2.1" (T) x 2.0" (W) x 0.6" (D)	0
CT-SCS-0100-U	100	2A TO 130A	0.75"	2.1" (T) x 2.0" (W) x 0.6" (D)	0
CT-SCM-0100-U	100	5A TO 130A	1.25"	3.35" (T) x 3.25" (W) x 1.00" (D)	0
CT-SCM-0200-U	200	4A TO 260A	1.25"	3.35" (T) x 3.25" (W) x 1.00" (D)	0
CT-SCM-0400-U	400	8A TO 520A	1.25"	3.35" (T) x 3.25" (W) x 1.00" (D)	0
CT-SCM-0600-U	600	12A TO 780A	1.25"	3.35" (T) x 3.25" (W) x 1.00" (D)	0
CT-SCL-0600-U	600	30A TO 780A	2.0"	5.0" (T) x 4.8" (W) x 1.2" (D)	0
CT-SCL-1000-U	1000	20A TO 1300A	2.0"	5.0" (T) x 4.8" (W) x 1.2" (D)	0
CT-R16-A4-U	4000	5A TO 5000A	4.5" DIAMETER	16" (L)	9
CT-R24-A4-U	4000	5A TO 5000A	7.0" DIAMETER	24" (L)	0
CT-R36-A4-U	4000	5A TO 5000A	10.8" DIAMETER	35" (L)	0
CT-R47-A4-U	4000	5A TO 5000A	14.6" DIAMETER	47" (L)	0
				METER WITH DISPLAY AND ENCLOSURE	1
ASE18X18X6				18X18X6 ENCLOSURE FOR PS48 METER	1

SERVICE TYPE NOTES

4-WIRE 3-PHASE (WYE) : TYPICAL 3 PHASE PANEL SERVICE - RTU IS SETUP FOR THIS SERVICE TYPE, BUT DOES NOT USE A NUETRAL
3-WIRE 3-PHASE (DELTA) : TYPICALLY FOUND IN OLD SITES. SERVICE IS VERY RARE AND DOES NOT COME UP OFTEN
3-WIRE 1-PHASE (SPLIT PHASE) : TYPICALLY FOUND IN RESIDENTIAL SERVICES, (2) 120VAC LINES SUPPLIED TO A PREMISES FROM A TRANSFORMER WITH A 240VAC "SECONDARY" WINDING WHICH HAS A "CENTER TAP" CONNECTED TO GROUND - WITH GROUND BE NEUTRAL
2-WIRE 1-PHASE: TYPICAL SINGLE PHASE LOAD EITHER 120VAC OR 277VAC.
3-WIRE DELTA WITH WILD LEG: USED WHEN BOTH SINGLE AND 3-PHASE POWER IS DESIRED TO BE SUPPLIED FROM A 3-PHASE TRANSFORMER. THE 3-PHASE IS CONNECTED IN THE DELTA CONFIGUREATION AND THE CENTER POINT OF 1 IS GROUNDED

GENERAL NOTES

480V/277V WIRE COLOR CODES : BROWN = A(1) PHASE, ORANGE = B(2) PHASE, YELLOW = C(3) PHASE, GRAY = NUETRAL
208V/120V WURE COLOR CODES : BLACK = A PHASE, RED = B PHASE, BLUE = C PHASE, WHITE = NUETRAL
MAIN GOAL FOR PETCO IS TO MONITOR THE VET LOADS FOLLOWED BY FILLING METER UP WITH LARGEST LOADS FIRST
MAIN OVERALL SITE MONITORING POINT USES ROGOWSKI COILS, ALL OTHER LOADS SIZE BASED ON AMPS

METER MESUREMENTS

MEASUREMENT	DEFINITION
VOLTS	THE SI UNIT OF ELECTROMOTIVE FORCE, THE DIFFERENCE OF POTENTIAL THAT WOULD DRIVE ONE AMPERE OF CURRENT AGAINST ONE OHM OF RESITANCE
AMPS	A UNIT OF ELECTRICA CURRENT EQUAL TO A FLOW OF ONE COULOMB PER SECOND
kW	1 kW = 1000W (W = Watts = V x A)
kVAR	kVAR = KILO VOLT AMPERE REACTIVE : IT IS A UNIT OF REACTIVE POWER. ALL THE POWER GIVEN TO A LOAD IS NOT UTILIZED AS USEFUL POWER, SOME POWER IS WASTED. THE POWER WHIS IS NOT CONSUMED IS REACTIVE PWER i.e. kVAR.
kVA	1kVA = 1000VA = 1000W
aPF	
dPF	
kW DEMAND	MAXIMUM RATE OF ELECTRICITY CONSUMPTION OVER A PERIOD OF TIME (5 MIN, 10 MIN, 15 MIN, 30 MIN)
kVA DEMAND	MAXIMUM RATE OF ELECTRICITY CONSUMPTION OVER A PERIOD OF TIME (5 MIN, 10 MIN, 15 MIN, 30 MIN)
IMPORT (RECEIVED) kWh	ENERGY RECEIVED FROM THE GRID
EXPORT (DELIVERED) kWh	ENERGY DELIVERED FROM THE GRID
NET kWh	AMOUNT OF kW USED IN (1) HOUR
IMPORT (RECEIVED) kVAh	
EXPORT (DELIVERED) kVAh	
NET kVAh	
IMPORT (RECEIVED) kVARh	
EXPORT (DELIVERED) kVARh	
NET kVARh	
THD	
THETA	
FREQUENCY	

ALL PARAMETERS FOR EACH PHASE AND SYSTEM TOTAL

NO:	REVISION DESCRIPTION	DATE	BY
1	BAS BID SET	11/06/20	SMP
2			
3			
4			
5			
6			
7			
8			
9			
10			
11			
12			
13			
14			
15			
16			

ISSUED FOR	ISSUED DATE
BID	11/06/20

COPYRIGHT NOTICE

© 2020 BY CSUSA, ACCU-TEMP, LLC. NO PART OF THIS DRAWING MAY BE TRANSMITTED, STORED IN ANY RETRIEVAL SYSTEM OR REPRODUCED, IN ANY WAY OR BY ANY MEANS, WITHOUT THE EXPRESS WRITTEN CONSENT OF CSUSA, STRATEGIC ACCOUNTS.

STAMP

ARCHITECT
BRR ARCHITECTURE
6700 ANTIOCH PLAZA, SUITE 300
MERRIAM, KS 66204
PHONE : (913) 262-9095
WEB : WWW.BRRARCH.COM

ENGINEER
HENDERSON ENGINEERS INC.
8345 LENEXA DRIVE, SUITE 300
LENEXA, KS 66214
PHONE : (913) 742-5000
WEB : WWW.HENDERSONENGINEERS.COM

OWNER
NIKE INC.
ONE BOWERMAN DRIVE
BEAVERTON, OR 97005
PHONE : (503) 671-6453
WEB : WWW.NIKE.COM

BUILDING AUTOMATION SYSTEM COMPANY
COMFORT SYSTEMS USA
STRATEGIC ACCOUNTS
2655 FORTUNE CIRCLE WEST, SUITE E
INDIANAPOLIS, IN 46241
PHONE: (317)638-5363
FAX: (317)264-3571

ENGR BY: P. SAWYER	PROJECT NO:
CHECKED BY: N/A	PROJECT MGR: J. OSKINS
DATE DRAWN: 11/06/20	CONTROL MFR: NOVAR

PROJECT ADDRESS

NIKE FACTORY STORE - UNITE

WATERFORD LAKES SHOPPING CENTER
ORLANDO, FL

SHEET INFORMATION

BUILDING AUTOMATION SYSTEM
KW METER
PROGRAMMING DETAILS

SHEET NUMBER

BAS
5.2

LIGHTING OVERRIDE INTERFACE DETAIL

TOUCHPLATE PART #

ULTS2-0808B-WHT

OVERRIDE TYPE

8-BUTTON WITH LED, BACNET COMMUNICATION

POWER REQUIREMENTS

12 TO 24VAC

DIP SWITCH SETTINGS

BAUD RATE/OPTIONS	: SW7 :	(ON - 1,2,4) (OFF - 3,5,6,7,8)
RS485 TERMINATION	: SW9 :	ALL OFF

PUSH BUTTON ADDRESSING

PB 1 MS/TP ADDRESS	: SW8 :	(ON - 1) (OFF - 2,3,4,5,6,7,8)
PB 2 MS/TP ADDRESS	: SW8 :	(ON - 2), (OFF - 1,3,4,5,6,7,8)

INSTALL NOTE

1. OVERRIDE MOUNTS IN 4X4 BOX.
2. POWER OVERRIDE WITH 24VDC FROM DC POWER SUPPLY.
3. TIE COMMUNICATIONS LOOP INTO COMM PORT AS DIRECTED ON COMMUNICATIONS SINGLE LINE DIAGRAM.
4. SET DIP SWITCHES AS DIRECTED ABOVE PRIOR TO POWERING OVERRIDE.
5. DAISY CHAIN COMM TERMINALS TOGETHER ON EACH PUSH BUTTON FOR COMMUNICATION.

FRONT VIEW

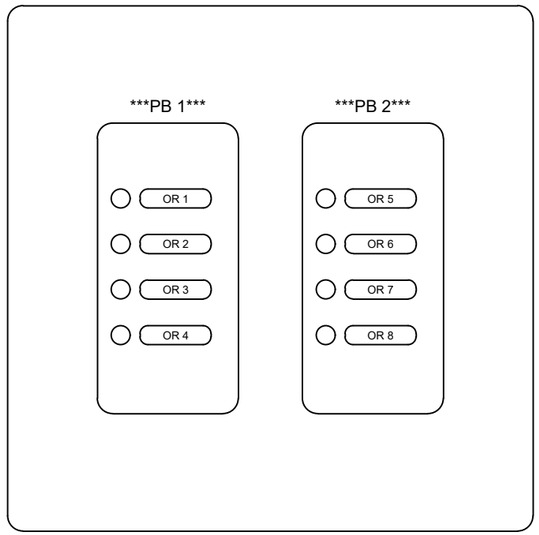

BACK VIEW

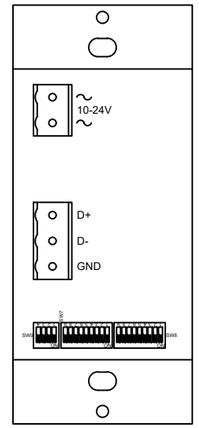

POWER TERM

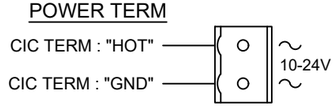

COMM TERM

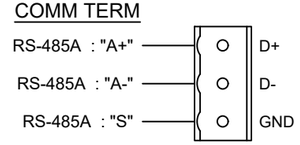

NO:	REVISION DESCRIPTION	DATE	BY
1	BAS BID SET	11/06/20	SMP

ISSUED FOR	ISSUED DATE
BID	11/06/20

COPYRIGHT NOTICE

© 2020 BY CSUSA, ACCU-TEMP, LLC. NO PART OF THIS DRAWING MAY BE TRANSMITTED, STORED IN ANY RETRIEVAL SYSTEM OR REPRODUCED, IN ANY WAY OR BY ANY MEANS, WITHOUT THE EXPRESS WRITTEN CONSENT OF CSUSA, STRATEGIC ACCOUNTS.

STAMP

ARCHITECT

BRR ARCHITECTURE
6700 ANTIOCH PLAZA, SUITE 300
MERRIAM, KS 66204
PHONE : (913) 262-9095
WEB : WWW.BRRARCH.COM

ENGINEER

HENDERSON ENGINEERS INC.
8345 LENEXA DRIVE, SUITE 300
LENEXA, KS 66214
PHONE : (913) 742-5000
WEB : WWW.HENDERSONENGINEERS.COM

OWNER

NIKE INC.
ONE BOWERMAN DRIVE
BEAVERTON, OR 97005
PHONE : (503) 671-6453
WEB : WWW.NIKE.COM

BUILDING AUTOMATION SYSTEM COMPANY

COMFORT SYSTEMS USA
STRATEGIC ACCOUNTS
2655 FORTUNE CIRCLE WEST, SUITE E
INDIANAPOLIS, IN 46241
PHONE: (317)638-5363
FAX: (317)264-3571

ENGR BY: P. SAWYER	PROJECT NO:
CHECKED BY: N/A	PROJECT MGR: J. OSKINS
DATE DRAWN: 11/06/20	CONTROL MFR: NOVAR

PROJECT ADDRESS

NIKE FACTORY STORE - UNITE

WATERFORD LAKES SHOPPING CENTER
ORLANDO, FL

SHEET INFORMATION

BUILDING AUTOMATION SYSTEM
MISCELLANEOUS BACNET DEVICE
INTERFACE DETAILS

SHEET NUMBER

BAS
6.1

BUILDING AUTOMATION SYSTEM BILL OF MATERIAL PROVIDED FOR INSTALL BY OTHERS

DESCRIPTION	DETAILS	SUPPPLIER	SUPPLIER PART #	QUANTITY SUPPLIED FOR INSTALL	CSUSA PART #	DRAWING SYMBOL ABBREVIATION
SPACE MOUNT CO2 SENSOR	0-5VDC OR 0 TO 10VDC OR 4 TO 20mA SIGNAL : 0 TO 2000 PPM : 24VAC OR 24VDC EXTERNAL POWER REQUIRED	ACI	A/CO2-R2	8	CO2	CO2
SPACE TEMPERATURE SENSOR	STAINLESS STEEL PLATE, 10K OHMS @ 77 DEG F : TYPE II THERMISTOR	ACI	A/CP-SP	1	A/CP-SP	ZN
CARRIER TEMPERATURE, HUMIDITY AND CO2 SENSOR	ZS STANDARD TEMPERATURE+HUMIDITY+CO2 SENSOR	CARRIER (KOCH AIR)	ZS2-HC-CAR	5	ZS2-HC-CAR	TCH
5 PORT ETHERNET SWITCH	5 PORT UNMANAGED 10BASE-T/100BASE-TX SWITCH, POWER WITH 24VAC OR 24VDC	CONTEMPORARY CONTROLS	EIAB5-100T	1 (TO PANEL SHOP	NON-CSUSA STOCK	
DENT BACNET METER CT	16" ROPE CT, 5000 AMPS	DENT	CT-R16-A4U	9 (SHIP TO WESCO)	CT-ROPE	
BACNET KW METER	MONITOR UP TO (2) VOLTAGE REFERENCES, MONITOR UP TO (48) SINGLE PH OR (16) 3 PH - 4 WIRE (WYE) LOADS, (REQUIRES 1 TO 48 CT'S DEPENDING ON APPLICATION) : ENCLOSURE WITHOUT DISPLAY	DENT	PS48HD-C-N-N	1 (SHIP TO WESCO)	PS48HD-C-N-N	
BAS BACKPLATE	BACKPLATE BUILT TO UL SPECS AND FACTORY INSTALLED IN ELECTRICAL GEAR	JACKSON CONTROLS	V1_NIKE WESCO BACKPLATE	1 (SHIP TO WESCO)	NIKE - WESCO - BACK	
ALARM INTERFACE PANEL	ENCLOSURE WITH TERMINAL BLOCK, CENTER MOUNTED, 6 CIRCUITS, GREY ABS WITH SOLID COVER	LITECYCLE	SG-TB-6P15-GS	1	S.I.P.	SIP
OUTDOOR TEMPERATUR AND HUMIDITY SENSOR WITH WEATHER SHIELD	BELIMO : ASSEMBLY INCLUDES SHIELD, SENSOR, AND MOUNTING BRACKET - OUTDOOR TEMP : 4ma = -40, 20mA = 160 - OUTDOOR RH : 4mA = 0%RH, 20mA = 100% RH	LYNXSPRING	22UTH-530X	1	NON-CSUSA STOCK	
NOVAR ES1 AX LICENSE	LICENSE TO RUN NOVAR ES1 IN NIAGARA AX	NOVAR	JACE-8000-AX	1	NON-CSUSA STOCK	
NOVAR ES1 CORE DEVICE LICENSE	NOVAR ES1 CORE LICENSE - 25 DEVICES	NOVAR	NC-8025	1	NON-CSUSA STOCK	
NOVAR NETWORK MANAGER	JACE CONGTROLLER : 1000 MHz ARM PROCESSOR : 1GB DDR3 SD RAM : REMOVABLE MICRO-SD CARD W/ 4GB FLASH TOTAL STORAGE/2GB USER STORAGE : WI-FI : USB TYPE A : (2) ISOLATED RS-485 W/ SELECTABLE BIAS AND TERMINATION : (2) ETHERNET PORTS	NOVAR	.NOVAR ES1	1	ES1	
NOVAR ES1 SOFTWARE MAINTENANCE AGREEMENT	CORE LICENSE : 25 DEVICES - SOFTWARE MAINTENANCE AGREEMENT : 18 MONTH INITIAL (MUST BE PURCHASED WITH NC-8010)	NOVAR	SMA-8025-1YR-INIT	1	NON-CSUSA STOCK	
PRICE POWER CABLE	FACTORY PRICE CABLE TO CONNECT MASTER DIFFUSER TO PRICE POWER MODULE (PPM)	PRICE	C35	3	NON-CSUSA STOCK	
PRICE CABLE CONNECTOR	COUPLES TOGETHER (2) PRICE FACTORY CABLES PART # C35	PRICE	CC	3	NON-CSUSA STOCK	
MODULATING MASTER DIFFUSER	BACNET COMMUNICATING DIFFUSER WITH WALL STAT (LDC READOUT, SETPOINT ADJUST, OCCUPANCY SENSOR) : 8"	PRICE	PPD2	2	NON-CSUSA STOCK	
MODULATING DRONE DIFFUSER	DIFFUSER CONTROLLED BY MASTER ROOM DIFFUSER : 8"	PRICE	PPDD	1	NON-CSUSA STOCK	
PRICE POWER MODULE	120VAC POWER SUPPLY FOR PRICE DIFFUSERS	PRICE	PPM	1	NON-CSUSA STOCK	
PRESURE RELEIF COLLAR	RELIEVES PRESSURE INTO RETURN PLENUM : 8"	PRICE	PRC	2	NON-CSUSA STOCK	
PRICE MODULATING DIFFUSER PACKAGE	COMPLETE TURNKEY INSTALL PACKAGE FOR PRICE MODULATING DIFFUSERS	PRICE	PRICE DIFFUSER KIT	1	NON-CSUSA STOCK	
2-POSITION ACTUATOR WITH PROVING SWITCH	SPRING RETURN, 20 IN LBS, 2-POSITION,, (2) AUXILLARY END SWITCHES, 24VAC/DC POWER, 2 WIRE	SIEMENS	GQD126.1P	2	NON-CSUSA STOCK	
REMOTE 34 POINT I/O MODULE	34 POINT INPUT/OUTPUT MODULE (16UI, 10DO, 8AO) EXPANSION MODULE	SIEMENS	IO-R-34	1 (TO PANEL SHOP	IO-R-34	
1NM-8000 ADD ON DUAL PORT RS-485 MODULE	EXPANSION MODULE FOR CONTROLLER TO ADD (2) ADDITIONAL RS-485 PORTS	SIEMENS	NPB-8000-2X-485	2	NON-CSUSA STOCK	
OUTDOOR LIGHT SENSOR	BAPI : 4mA = 0 FC, 20mA = 875 FC	SIEMENS FIELD PURCHASING PORTAL	BA/LLV-20-FC	1	NON-CSUSA STOCK	
8 BUTTON BACNET OVERRIDE	WHITE 8 BUTTON OVERRIDE, BACNET MS/TP COMMUNICATION, FITS DUAL GANG BOX	TOUCHPLATE	ULTS2-0808B-WHT	1	ULTS2-0808-WHT	
WATTSTOPPER NETWORK BRIDGE	CONVERTS WATTSTOPPER PROPRIETARY COMMUNICATION TO BACNET MS/TP FOR INTERFACE BY BAS SYSTEM	WATTSTOPPER	LMBC-300	4	NON-CSUSA STOCK	
WATTSTOPPER OCCUPANCY SENSOR	DIGITAL DUAL TECH CEILING MOUNT OCCUPANCY SENSOR	WATTSTOPPER	LMDC-100	6	NON-CSUSA STOCK	
WATTSTOPPER DIMMING WALL SWITCH	DIGITAL DIMMING WALL SWITCH WITH I.R. AND WHITE TRIM	WATTSTOPPER	LMDM-101-W	8	NON-CSUSA STOCK	
WATTSTOPPER ROOM CONTROLLER	DIGITAL SINGLE RELAY ROOM CONTROLLER WITH ON/OFF/0-10V DIMMING	WATTSTOPPER	LMRC-211	10	NON-CSUSA STOCK	
WATTSTOPPER LIGHTING SYSTEM	WATTSTOPPER LIGHTING CONTROL PACKAGE	WATTSTOPPER	WATTSTOPPER KIT	1	NON-CSUSA STOCK	
18 GAUGE 4 CONDUCTOR WIRE	18 GAUGE 4 CONDUCTOR, SHIELDED, OUTDOOR RATED WIRE	WINDY CITY	714310VNQ	15		

NO:	REVISION DESCRIPTION	DATE	BY
1	BAS BID SET	11/06/20	SMP
2			
3			
4			
5			
6			
7			
8			
9			
10			
11			
12			
13			
14			
15			

ISSUED FOR	ISSUED DATE
BID	11/06/20

COPYRIGHT NOTICE

© 2020 BY CSUSA, ACCU-TEMP, LLC. NO PART OF THIS DRAWING MAY BE TRANSMITTED, STORED IN ANY RETRIEVAL SYSTEM OR REPRODUCED, IN ANY WAY OR BY ANY MEANS, WITHOUT THE EXPRESS WRITTEN CONSENT OF CSUSA, STRATEGIC ACCOUNTS.

STAMP

ARCHITECT

BRR ARCHITECTURE
6700 ANTIOCH PLAZA, SUITE 300
MERRIAM, KS 66204
PHONE : (913) 262-9095
WEB : WWW.BRRARCH.COM

ENGINEER

HENDERSON ENGINEERS INC.
8345 LENEXA DRIVE, SUITE 300
LENEXA, KS 66214
PHONE : (913) 742-5000
WEB : WWW.HENDERSONENGINEERS.COM

OWNER

NIKE INC.
ONE BOWERMAN DRIVE
BEAVERTON, OR 97005
PHONE : (503) 671-6453
WEB : WWW.NIKE.COM

BUILDING AUTOMATION SYSTEM COMPANY

COMFORT SYSTEMS USA
STRATEGIC ACCOUNTS
2655 FORTUNE CIRCLE WEST, SUITE E
INDIANAPOLIS, IN 46241
PHONE: (317)638-5363
FAX: (317)264-3571

ENGR BY: P. SAWYER	PROJECT NO:
CHECKED BY: N/A	PROJECT MGR: J. OSKINS
DATE DRAWN: 11/06/20	CONTROL MFR: NOVAR

PROJECT ADDRESS

NIKE FACTORY STORE - UNITE

WATERFORD LAKES SHOPPING CENTER
ORLANDO, FL

SHEET INFORMATION

BUILDING AUTOMATION SYSTEM
BILL OF MATERIAL

SHEET NUMBER

BAS
7.0

LIGHTING CONTROL SEQUENCE OF OPERATION

REFERENCE THE EMS APPENDIX ELECTRICAL DRAWING FOR ADDITIONAL CONTROL SEQUENCES NOT SPECIFICALLY COVERED IN THIS GENERAL SEQUENCE OF OPERATION FOR THE LIGHTING CONTROL.

THE CONTROL SYSTEM CONSISTS OF 3 SEPARATE SYSTEMS.

SYSTEM 1 : NOVAR BAS SYSTEM

SYSTEM INTERFACES THE WESCO IFS FACTORY INSTALLED SMART BREAKERS AND CONTROL BOARDS VIA RELAY CONTACT CLOSURE.

SYSTEM INTERFACES THE WATTSTOPPER LIGHTING SYSTEM VIA BACNET MS/TP NETWORK

SYSTEM ACTS AS THE THE MASTER TIME CLOCK AND OUTDOOR LIGHT LEVEL MONITOR FOR EACH LIGHTING
ZONES.

SCHEDULE 1 : ATHLETE LEVEL LIGHTING

ENABLED WHEN SECURITY SYSTEM IS DISARMED

SALES GENERAL LIGHTS DIM TO 50% WHEN SCHEDULE IS ACTIVE. DIMMING CONTROL PROVIDED BY WATTSTOPPER SYSTEM.

MANUAL DIMMING CONTROL AND ON/OFF IS PROVIDED BY WATTSTOPPER SYSTEM.

SCHEDULE 2 : CUSTOMER LEVEL LIGHTING

ENABLED WHEN TIME OF DAY SCHEDULE IS ENABLED OR WHEN THE 2 HOUR MASTER LIGHTING OVERRIDE IS ENABLED

SALES GENERAL LIGHTS ARE 100% BRIGHTNESS. DIMMING CONTROL PROVIDED BY WATTSTOPPER SYSTEM.

MANUAL DIMMING CONTROL AND ON/OFF IS PROVIDED BY WATTSTOPPER SYSTEM.

SCHEDULE 3 : SHOW WINDOW SALES DISPLAY LIGHTS

ENABLED WHEN TIME OF DAY SCHEDULE IS ENABLED OR WHEN THE 2 HOUR MASTER LIGHTING OVERRIDE IS ENABLED.

SCHEDULE 4 : SALES DISPLAY LIGHTS

ENABLED WHEN TIME OF DAY SCHEDULE IS ENABLED OR WHEN THE 2 HOUR MASTER LIGHTING OVERRIDE IS ENABLED.

SCHEDULE 5 : STOCK ROOM LIGHTS

ENABLED WHEN SECURITY SYSTEM IS DISARMED.

OCCUPANCY SENSOR AND MANUAL DIMMING/ON/OFF CONTROL PROVIDED BY WATTSTOPPER SYSTEM.

SCHEDULE 6 : BOH PLUGMOLD

ENABLED WHEN TIME OF DAY SCHEDULE IS ENABLED OR WHEN THE 2 HOUR MASTER LIGHTING OVERRIDE IS ENABLED.

SCHEDULE 7 : EXTERIOR SIGNS

ENABLED WHEN TIME OF DAY SCHEDULE IS ENABLED AND THE OUTDOOR LIGHT LEVEL IS BELOW 100 FOOT CANDLES (ADJ) OR WHEN THE MASTER LIGHTING OVERRIDE IS ENABLED.

SYSTEM ACTS AS THE MASTER LIGHTING OVERRIDE FOR ALL THE SPECIFIC ZONES.

OVERRIDE 1 : ATHLETE LEVEL LIGHTING
OVERRIDE 2 : CUSTOMER LEVEL LIGHTING
OVERRIDE 3 : SHOW WINDOW DISPLAY LIGHTING
OVERRIDE 4 : EXTERIOR SIGNS
OVERRIDE 5 : DISPLAY LIGHTING
OVERRIDE 6 : STOCK ROOM LIGHTS
OVERRIDE 7 : OFFICE RECEPTACLES
OVERRIDE 8 : ALL LIGHTS ON/ALL LIGHTS OFF

SYSTEM 2 : WESCO IFS SMART BREAKER CONTROL RAILS.

SYSTEM COMMUNICATES TO BAS SYSTEM VIA MODBUS COMMUNICATION. SMART BREAKER IS CONTROLLABLE VIA SOFTWARE POINT.

SYSTEM 3 : WATTSTOPPER LIGHTING SYSTEM

SYSTEM IS STAND-ALONE AND TIES TO THE NOVAR BAS SYSTEM VIA BACNET MS/TP INTERFACE.

THE SYSTEM WILL CONTROL LIGHTING CIRCUITS DIRECTLY VIA ROOM CONTROLLERS AND WILL PROVIDE ON/OFF AND DIMMING CONTROL AS DETAILED IN THE ELECTRICAL DRAWINGS.

THE SYSTEM WILL PROVIDE LOCAL WALL SWITCHES FOR DIMMING AND ON/OFF CONTROL IN EACH LOCATION REQUIRED PER THE ELECTRICAL DRAWINGS.

REFERENCE EMS APPENDIX AND ELECTRICAL DRAWINGS PROVIDED FOR CONSTRUCTION FOR ADDITIONAL CONTROL SEQUENCES AND HOW ALL THE DEVICES PROVIDED IN THE WATTSTOPPER PACKAGE BIND TOGETHER.

SECURITY SYSTEM INTERLOCK

WHEN THE SECURITY SYSTEM IS IN ALARM, ALL LIGHTS WILL ENABLED.

WHEN SECURITY SYSTEM IS ARMED, SALES GENERAL LIGHTING WILL REMAIN ON FOR 10 MINUTES (ADJ) AFTER ALARM SET TO ALLOW FOR ATHLETE TO LEAVE BUILDING SAFELY

RTU SEQUENCE OF OPERATION

TIME OF DAY SCHEDULE

THE UNIT WILL BE SCHEDULED WITH A MINIMUM OF AN OCCUPIED AND UNOCCUPIED SCHEDULE. ADDITIONAL SCHEDULES WILL BE AVAILABLE FOR IMPLEMENTATION REMOTELY AS NEEDED.

SUPPLY FAN CONTROL

THE SUPPLY FAN SHALL RUN CONTINUOUSLY DURING OCCUPIED TIMES AND INTERMITTENTLY DURING UNOCCUPIED TIMES.

A **FAN OFF DELAY** ALLOWS THE SUPPLY FAN TO CONTINUE AFTER HEATING COOLING STOPS

IF THE FOLLOWING ALARMS ARE ACTIVE,, THE FAN TURNS OFF IMMEDIATELY,REGARDLESS OF THE OCCUPANCY STATE OR DEMAND.

FIRE SHUTDOWN
SUPPLY AIR TEMP SENSOR ALARM
SECURITY SYSTEM IS IN ALARM
SAFETY CHAIN
SPACE TEMP SENSOR ALARM

COOLING CONTROL

THE COOLING STAGES ARE CONTROLLED BY THE COOLING CONTROL PID LOOP AND COOLING CAPACITY ALGORITHM. THEY CALCULATE THE DESIRED NUMBER OF STAGES NEEDED TO SATISFY THE SPACE BY COMPARING THE SPACE TEMPERATURE TO THE EFFECTIVE OCCUPIED COOLING SETPOINT WHEN OCCUPIED AND EFFECTIVE UNOCCUPIED COOLING SETPOINT WHEN UNOCCUPIED.

THE FOLLOWING CONDITIONS MUST BE TRUE FOR THE COOLING ALGORITHM TO OPERATE.

OUTDOOR AIR TEMPERATURE IS GREATER THAN THE **COOLING LOCKOUT TEMPERATURE**

THE INDOOR FAN IS ON

THE UNIT HAS A VALID **SUPPLY AIR TEMPERATURE** READING

THE UNIT HAS A VALID **SPACE TEMPERATURE** READING

HEAT MODE IS NOT ACTIVE AND THE 5 MINUTE TIME BETWEEN MODES HAS EXPIRED

ECONOMIZER IS UNAVAILABLE, OR IF THE ECONOMIZER IS ACTIVE, MECHANICAL COOLING IS AVAILABLE IF THE ECONOMIZER IS OPEN > 90% FOR AT LEAST 7.5 MINUTES, THE SUPPLY AIR TEMP (SAT) > [**MINIMUM COOLING SAT** + 5Δ°F] AND SPT > [**EFFECTIVE COOLING SETPOINT** + 0.5Δ°F]

THE COOLING RELAYS ARE CONTROLLED BY THE COOLING CONTROL PID LOOP AND COOLING CAPACITY ALGORITHM. THEY CALCULATE THE DESIRED NUMBER OF STAGES NEEDED TO SATISFY THE SPACE BY COMPARING THE **SPACE TEMPERATURE** TO THE:

EFFECTIVE OCCUPIED COOLING SETPOINT (74°F, ADJ) WHEN OCCUPIED

EFFECTIVE UNOCCUPIED COOLING SETPOINT (85°F, ADJ) WHEN UNOCCUPIED

WHEN THE COOLING ALGORITHM PRECONDITIONS HAVE BEEN MET, THE COMPRESSORS ARE ENERGIZED IN STAGES, AS APPLICABLE. ANTI-RECYCLE TIMERS ARE EMPLOYED TO PROTECT THE EQUIPMENT FROM SHORT-CYCLING. THERE ARE FIXED 3 MINUTES MINIMUM ON-TIMES, AND 5 MINUTE OFF-TIMES FOR EACH COMPRESSOR.

DURING COMPRESSOR ALGORITHM OPERATION, THE CONTROL BOARD MAY REDUCE THE NUMBER OF ACTIVE STAGES IF THE UNIT SUPPLY AIR TEMPERATURE FALLS BELOW THE **MINIMUM COOLING SAT SETPOINT**. A COMPRESSOR STAGES OFF IN THIS FASHION MAY BE STARTED AGAIN AFTER THE NORMAL TIME-GUARD PERIOD HAS EXPIRED, IF THE **SUPPLY AIR TEMPERATURE** HAS INCREASED ABOVE **MINIMUM COOLING SAT SETPOINT**.

ECONOMIZER

THE RTU OPEN PROVIDES AN ANALOG ECONOMIZER OUTPUT FOR UNITS EQUIPPED WITH AN ECONOMIZER. ECONOMIZER DAMPERS MAY BE USED TO PROVIDE INDOOR AIR QUALITY CONTROL AND/OR FREE COOLING WHEN OUTSIDE AIR CONDITIONS ARE SUITABLE.

THE FOLLOWING CONDITIONS MUST BE TRUE FOR THE ECONOMIZER OPERATION.

THE **OUTDOOR AIR TEMPERATURE** IS LESS THAN THE **SPACE TEMPERATURE** AND LESS THAN THE **ECONOMIZER HIGH OAT LOCKOUT TEMP** SETPOINT

THE INDOOR FAN IS ON

THE UNIT HAS A VALID **SUPPLY AIR TEMPERATURE** READING

THE UNIT HAS A VALID **SPACE TEMPERATURE** READING

IF THE CONTROL BOARD IS CONFIGURED FOR VFD OR 2-SPEED FAN, THE ECONOMIZER MINIMUM POSITION IS ADJUSTED TO PROVIDE A CONSTANT AMOUNT OF OUTDOOR AIR. IF THE FAN IS ON HIGH SPEED OR IS CONFIGURED FOR SINGLE-SPEED FAN, THE ECONOMIZER MINIMUM POSITION WILL BE SET TO THE **VENT DMPR POS/DCV MIN POS** SETPOINT. IF IT IS CONFIGURED FOR VFD OR 2-SPEED FAN, AND THE FAN IS ON LOW SPEED, THE ECONOMIZER MINIMUM POSITION WILL BE SET TO THE **LOW FAN ECON MIN POS**.

IF ALL PRECEDING CONDITIONS ARE TRUE, THE ECONOMIZER PID LOOP MODULATES THE DAMPER BETWEEN THE MINIMUM POSITION AND 100% OPEN.

DURING ECONOMIZER OPERATION, THE ECONOMIZER POSITION IS REDUCED AS THE SAT FALLS BELOW THE **MINIMUM COOLING SAT** + 5Δ°F, BUT NEVER CLOSES BELOW THE APPLICABLE MINIMUM POSITION.

OPTIMAL START

TEMPERATURE COMPENSATED OPTIMAL START IS A SECOND START METHOD USED FOR GAS OR ELECTRIC HEATING APPLICATIONS. IT SWITCHES FROM UNOCCUPIED TO THE OCCUPIED SETPOINTS AT A CALCULATED TIME PRIOR TO OCCUPANCY. THIS MINIMIZES THE OPERATION OF THE UNITS FAN. THE OPTIMAL START RECOVERY PERIOD MAY BEGIN AS EARLY AS 4 HOURS PRIOR TO OCCUPANCY. THE TIME AT WHICH THE SETPOINTS MOVE IS BASED ON THE DIFFERENCE BETWEEN THE CURRENT SPACE TEMPERATURE AND THE DESIRED SETPOINT, MULTIPLIES BY THE "K" FACTOR, OR RECOVERY RATE, FOR THE REQUIRED MODE OF OPERATION.

ON THE **PROPERTIES** PAGE > **EQUIPMENT** TAB > **CONFIGURATION** > **SETPOINTS** > **OPTIMAL START**, THE DEFAULT VALUE IS SET TO 1 AND MUST BE SET GREATER THAT **0** (**0.00** DISABLES **OPTIMAL START**) AND LESS THAN OR EQUAL TO **4**.

THE SYSTEM IS UNOCCUPIED

TO CHANGE TEMPERATURE COMPENSATED OPTIMAL START SETTING:

IN THE NAVIGATION TREE, SELECT THE EQUIPMENT THAT YOU WANT TO CHANGE

ON THE **PROPERTIES** PAGE > **EQUIPMENT** TAB > **CONFIGURATION** > **SETPOINTS**, CLICK **HEAT START K FACTOR** OR **COOL START K FACTOR**. THE DEFINES THE EQUIPMENT'S RECOVERY RATE IN MINUTES/DEG.

HEATING

THE SPECIFIC HEATING SEQUENCE IS DETERMINED BY THE CONTROLLERS APPLICATION AND CONFIGURATION. THE CONTROL BOARD CONTROLS UP TO TWO STAGES OF GAS OR ELECTRIC HEATING WITH AN ADDITIONAL OUTPUT FOR A REVERSING VALVE (HEAT PUMP APPLICATIONS).

THE FOLLOWING CONDITIONS MUST BE TRUE FOR THE HEATING ALGORITHM TO OPERATE:

THE **OUTDOOR AIR TEMPERATURE** IS LESS THAN THE **HEATING LOCKOUT TEMPERATURE** SETPOINT

THE INDOOR FAN HAS BEEN ON FOR AT LEAST 30 SECONDS

THE UNIT HAS A VALID **SUPPLY AIR TEMPERATURE** READING

THE UNIT HAS A VALID **SPACE TEMPERATURE** READING

NEITHER COOL MORE NOR ECONOMIZER ARE ACTIVE AND THE TIME GUARD BETWEEN MODES HAS EXPIRED.

THE HEATING RELAYS ARE CONTROLLED BY THE HEATING CONTROL PID LOOP AND HEATING STAGES CAPACITY ALGORITHM, WHICH CALCULATE THE DESIRED NUMBER OF STAGES TO SATISFY THE SPACE TEMPERATURE TO THE:

EFFECTIVE OCCUPIED HEATING SETPOINT (68°F, ADJ) WHEN OCCUPIED

EFFECTIVE UNOCCUPIED HEATING SETPOINT (60°F, ADJ) WHEN UNOCCUPIED

WHEN THE HEATING ALGORITHM PRECONDITIONS HAVE BEEN MET, THE HEATING IS ENERGIZED IN STAGES. ANTI-RECYCLE TIMERS ARE EMPLYED TO PROTECT THE EQUIPMENT FROM SHORT-CYCLING. THERE ARE FIXED ONE MINUTE MINIMUM ON AND OFF TIMES FOR EACH HEATING OUTPUT.

DURING HEATING OPERATION, THE CONTROL BOARD MAY REDUCE THE NUMBER OF ACTIVE STAGES IF THE UNIT **SUPPLY AIR TEMPERATURE** EXCEEDS THE **MAXIMUM HEATING SAT** SETPOINT. A HEAT STAGE TURNED OFF IN THIS FASHION MAY BE STARTED AGAIN AFTER THE NORMAL TIME GUARD HAS EXPIRED, IF THE **SUPPLY AIR TEMPERATURE** HAS DECREASED BELOW THE **MAXIMUM HEATING SAT** SETPOINT.

FAN STATUS

FAN STATUS MAY BE CONFIGURED ON ANY UNUSED BINARY INPUT. A TYPICAL APPLICATION WOULD BE AN AIRFLOW SWITCH, CURRENT SENSING RELAY, OR OTHER DEVICE THAT PROVIDES A SUPPLY FAN RUNNING VERIFICATION.

IF THE CONTROLLER LOSES FAN STATUS DURING OPERATION, HEATING AND COOLING ARE DISABLED, THE ECONOMIZER DAMPER (IF AVAILABLE IS CLOSED, AND AN ALARM FOR LOSS OF STATUS IS INDICATED.

IF THE FAN STATUS IS ON WHEN THE CONTROLLER IS COMMANDING THE FAN OFF, THE UNIT REMAINS IN THE OFF STATE. AN ALARM IS GENERATED INDICATING THE THE FAN IS RUNNING WHEN IT SHOULD BE OFF.

NO:	REVISION DESCRIPTION	DATE	BY
1	BAS BID SET	11/06/20	SMP
2			
3			
4			
5			
6			
7			
8			
9			
10			
11			
12			
13			
14			
15			
16			

ISSUED FOR	ISSUED DATE
BID	11/06/20

COPYRIGHT NOTICE

© 2020 BY CSUSA, ACCU-TEMP, LLC. NO PART OF THIS DRAWING MAY BE TRANSMITTED, STORED IN ANY RETRIEVAL SYSTEM OR REPRODUCED, IN ANY WAY OR BY ANY MEANS, WITHOUT THE EXPRESS WRITTEN CONSENT OF CSUSA, STRATEGIC ACCOUNTS.

STAMP

ARCHITECT

BRR ARCHITECTURE
6700 ANTIOCH PLAZA, SUITE 300
MERRIAM, KS 66204

PHONE : (913) 262-9095
WEB : WWW.BRRARCH.COM

ENGINEER

HENDERSON ENGINEERS INC.
8345 LENEXA DRIVE, SUITE 300
LENEXA, KS 66214

PHONE : (913) 742-5000
WEB : WWW.HENDERSONENGINEERS.COM

OWNER

NIKE INC.
ONE BOWERMAN DRIVE
BEAVERTON, OR 97005

PHONE : (503) 671-6453
WEB : WWW.NIKE.COM

BUILDING AUTOMATION SYSTEM COMPANY

COMFORT SYSTEMS USA

STRATEGIC ACCOUNTS
2655 FORTUNE CIRCLE WEST, SUITE E
INDIANAPOLIS, IN 46241

PHONE: (317)638-5363
FAX: (317)264-3571

ENGR BY: P. SAWYER	PROJECT NO:
CHECKED BY: N/A	PROJECT MGR: J. OSKINS
DATE DRAWN: 11/06/20	CONTROL MFR: NOVAR

PROJECT ADDRESS

NIKE FACTORY STORE - UNITE

WATERFORD LAKES SHOPPING CENTER
ORLANDO, FL

SHEET INFORMATION

BUILDING AUTOMATION SYSTEM
SEQUENCE OF OPERATION

SHEET NUMBER

BAS
8.1

AV ROOM ROOM TEMPERATURE CONTROL SEQUENCE OF OPERATION

THE AV ROOM SPACE TEMPERATURE IS MAINTAINED BY CONTROLLING A ZONE DAMPER LOCATED IN THE SUPPLY DUCT FED BY THE LOCAL UNIT SERVING THE SPACES AROUND THE AV ROOM AND A EXHAUST FAN THAT TRANSFERS AIR FROM THE AV ROOM TO THE STOCK ROOM OR ADJACENT SPACE.

THE AV ROOM EXHAUST FAN IS ENABLED WHEN THE SPACE TEMPERATURE RISES 1°F ABOVE THE COOLING SETPOINT (75°F, ADJ). THE FAN CONTINUES TO RUN UNTIL THE SPACE TEMPERATURE DROPS 1°F BELOW THE COOLING SETPOINT.

THE AV ROOM ZONE DAMPER OPENS WHEN THE UNIT SUPPLYING THE AV ROOM WITH CONDITIONED AIR IS IN A COOLING MODE ONLY. IF THE UNIT IS IN FAN ONLY OR HEATING MODE, THEN THE ZONE DAMPER IS CLOSED.

RESTROOM AND JANITORS CLOSET EXHAUST FANS SEQUENCE OF OPERATION

DURING OCCUPIED PERIODS (WHEN SECURITY SYSTEM IS DISARMED), THE RESTROOM AND JANITORS CLOSET EXHAUST FANS ARE ENABLED TO RUN.

THE FAN(S) ARE EQUIPPED WITH A MOTORIZED BACK DRAFT DAMPER. IF THE DAMPER DOES NOT PROVE OPEN, THEN THE FAN IS NOT ENABLED AND ALARM IS GENERATED.

DURING UNOCCUPIED PERIODS (WHEN THE SECURITY SYSTEM IS ARMED), THE RESTROOM AND JANITORS CLOSET EXHAUST FANS ARE DISABLED AND THE DAMPERS ARE CLOSED.

HOT WATER RE-CIRCULATION PUMP SEQUENCE OF OPERATION

DURING OCCUPIED PERIODS (WHEN SECURITY SYSTEM IS DISARMED), THE PUMP IS ENABLED TO RUN.

DURING UNOCCUPIED PERIODS (WHEN SECURITY SYSTEM IS ARMED), THE PUMP IS DISABLED.

OFFICE MODULATING DIFFUSER SEQUENCE OF OPERATION

OCCUPIED MODE

THE UNIT SERVING THE SPACES WHERE THE DIFFUSERS ARE INSTALLED WILL RUN THE FAN CONTINUOUSLY, CYCLING COOLING AND HEATING STAGES TO MAINTAIN THE ACTIVE SPACE TEMPERATURE SETPOINT.

INDIVIDUAL OFFICE DIFFUSERS WILL, THROUGH ITS INDIVIDUAL SPACE SENSOR, MODULATE THE AIRFLOW INTO THE SPACE TO MAINTAIN OCCUPIED SPACE TEMPERATURE SETPOINT (74°F, ADJ) FOR COOLING AND 68°F (ADJ) FOR HEATING.

AN OCCUPANCY SENSOR BUILT INTO THE DIFFUSER THERMOSTAT ALLOWS THE UNIT TO GO INTO UNOCCUPIED MODE WHEN THE ROOM IS VACANT FOR 15 MINUTES (ADJ).

DURING OCCUPIED PERIODS AND NO CALL FOR COOLING OR HEATING, THE DIFFUSER WILL MODULATE TO MAINTAIN MINIMUM AIRFLOW TO THE SPACE AS DETERMINED BY THE TEST AND BALANCE CONTRACTOR.

UNOCCUPIED MODE

THE UNIT SERVING THE SPACE WILL BE OFF. THE UNIT WILL CYCLE ON TO MAINTAIN UNOCCUPIED COOLING AND HEATING SETPOINTS.

THE DIFFUSERS WILL BE DISABLED UNTIL OCCUPIED.

DEMAND CONTROL VENTILATION (DCV) FOR UNIT ONLY SEQUENCE OF OPERATION

THE SYSTEM WILL UTILIZE A CO_2 SENSOR FOR THE SALES AREA, STOCK ROOM, LOUNGE, AND EACH OFFICE. THE SYSTEM WILL MODULATE THE ECONOMIZER ON THE UNITS SERVING EACH AREA BETWEEN ITS MINIMUM OUTDOOR AIR DAMPER POSITION (TBD BY TAB CONTRACTOR) AND MAXIMUM OUTDOOR AIR DAMPER POSITION (TBD BY TAB CONTRACTOR).

THE SYSTEM WILL START TO MODULATE THE DAMPER OPEN WHEN CO_2 LEVEL RISES 100PPM (ADJ) ABOVE AMBIENT CO_2 LEVEL (400PPM) AND CONTINUE TO OPEN TO ITS MAXIMUM POSITION AS CO_2 LEVEL RISES TO AND ABOVE 700PPM (ADJ) ABOVE AMBIENT CO_2 LEVELS. AS THE CO_2 LEVEL DROPS, THE SYSTEM WILL START TO MODULATE THE DAMPERS TO THE MINIMUM POSITION.

DEMAND CONTROL VENTILATION FOR DIFFUSERS ONLY SEQUENCE OF OPERATION

THE SYSTEM WILL UTILIZE A CO_2 SENSOR IN EACH OFFICE. THE MODULATE THE ZONE DAMPER BETWEEN ITS MINIMUM POSITION OF (TBD BY TAB CONTRACTOR) AND MAXIMUM POSITION (TBD BY TAB CONTRACTOR).

THE SYSTEM WILL START TO MODULATE THE DAMPER OPEN WHEN CO_2 LEVEL RISES 100PPM (ADJ) ABOVE AMBIENT CO_2 LEVEL (400PPM) AND CONTINUE TO OPEN TO ITS MAXIMUM POSITION AS CO_2 LEVEL RISES TO AND ABOVE 700PPM (ADJ) ABOVE AMBIENT CO_2 LEVELS. AS THE CO_2 LEVEL DROPS, THE SYSTEM WILL START TO MODULATE THE DAMPERS TO THE MINIMUM POSITION.

ENTHALPY CONTROL

COMPARATIVE ENTHALPY ANALYSIS IS TO BE USED FOR GLOBALLY ENABLING OR DISABLING ANY HVAC SYSTEM ECONOMIZER. GLOBAL INDOOR AND OUTDOOR TEMPERATURE SENSORS AND HUMIDITY SENSORS ARE USED IN THIS CALCULATION.

PHASE LOSS MONITORING

THE BAS WILL MONITOR INCOMING POWER VOLTAGE TO THE BUILDING.THE PHASE LOSS THRESHOLD SHALL BE SET AT 85% OF NOMINAL INCOMING VOLTAGE. UPON DETECTION OF A PHASE LOSS CONDITION, THE SYSTEM WILL GENERATE AN ALARM.

ENERGY MONITORING

THE BAS WILL INCORPORATE REAL TIME MONITORING OF THE SITES ELECTRICAL ENERGY USAGE VIA A KW METER INSTALLED AS DESCRIBED IN THE ELECTRICAL DRAWINGS.

THE SYSTEM MONITORS TOTAL SITE KW USAGE BY MONITORING THE FEEDS COMING IN FROM THE UTILITY SERVICE TO THE MAIN DISTRIBUTION PANEL.

ADDITIONAL SUB-METERING OF EACH PANEL IS ACHIEVED BY MONITORING THE INCOMING FEEDS TO EACH PANEL.

SECURITY SYSTEM MONITORING

THE BAS WILL MONITOR THE SECURITY SYSTEM (PROVIDED BY OTHERS) VIA DRY CONTACT RELAY OUTPUTS PROVIDED BY THE SECURITY SYSTEM.

THE BAS WILL MONITOR SECURITY ARMED AND DISARMED FUNCTION AND WILL USE THE STATE OF THE SECURITY ARMED/DISARMED FUNCTION FOR SCHEDULING OF HVAC UNITS AND LIGHTING.

THE BAS WILL MONITOR THE SECURITY ALARM FUNCTION. WHEN THE SECURITY SYSTEM IS IN ALARM, THE HVAC IS TURNED ON AND ALL LIGHTS ARE TURNED ON TO FULL BRIGHT REGARDLESS OF THE OCCUPANCY STATE AND COMMAND.

NO:	REVISION DESCRIPTION	DATE	BY
1	BAS BID SET	11/06/20	SMP
2			
3			
4			
5			
6			
7			
8			
9			
10			
11			
12			
13			
14			
15			
16			
17			

ISSUED FOR	ISSUED DATE
BID	11/06/20

COPYRIGHT NOTICE

© 2020 BY CSUSA, ACCU-TEMP, LLC. NO PART OF THIS DRAWING MAY BE TRANSMITTED, STORED IN ANY RETRIEVAL SYSTEM OR REPRODUCED, IN ANY WAY OR BY ANY MEANS, WITHOUT THE EXPRESS WRITTEN CONSENT OF CSUSA, STRATEGIC ACCOUNTS.

STAMP

ARCHITECT

BRR ARCHITECTURE
6700 ANTIOCH PLAZA, SUITE 300
MERRIAM, KS 66204

PHONE : (913) 262-9095
WEB : WWW.BRRARCH.COM

ENGINEER

HENDERSON ENGINEERS INC.
8345 LENEXA DRIVE, SUITE 300
LENEXA, KS 66214

PHONE : (913) 742-5000
WEB : WWW.HENDERSONENGINEERS.COM

OWNER

NIKE INC.
ONE BOWERMAN DRIVE
BEAVERTON, OR 97005

PHONE : (503) 671-6453
WEB : WWW.NIKE.COM

BUILDING AUTOMATION SYSTEM COMPANY

COMFORT SYSTEMS USA

STRATEGIC ACCOUNTS
2655 FORTUNE CIRCLE WEST, SUITE E
INDIANAPOLIS, IN 46241

PHONE: (317)638-5363
FAX: (317)264-3571

ENGR BY: P. SAWYER	PROJECT NO:
CHECKED BY: N/A	PROJECT MGR: J. OSKINS
DATE DRAWN: 11/06/20	CONTROL MFR: NOVAR

PROJECT ADDRESS

NIKE FACTORY STORE - UNITE

WATERFORD LAKES SHOPPING CENTER
ORLANDO, FL

SHEET INFORMATION

BUILDING AUTOMATION SYSTEM
SEQUENCE OF OPERATION

SHEET NUMBER

BAS
8.2

PRINT PLAN IN COLOR

REFERENCE WATTSTOPPER
LAYTOUT FOR ADDITIONAL DETAILS

LIGHTING COLOR CODE		
ZONE 1	ATHLETE	GREEN
ZONE 2	CUSTOMER	CYAN
ZONE 3	SHOW WINDOWS	LIGHT PINK
ZONE 4	SALES DISPLAY	ORANGE
ZONE 5	STOCK ROOM	PURPLE
ZONE 6	BOH PLUGMOLD	PINK
ZONE 7	EXT. SIGNS	RED

MASTER OVERRIDE MS1	
PB1	ATHLETE LEVEL OR
PB2	CUSTOMER LEVEL OR
PB3	SHOW WINDOW DISPLAY LIGHTS
PB4	SALES DISPLAY LIGHTS OR
PB5	STOCK ROOM OR
PB6	BOH PLUGMOLD OR
PB7	EXT. SIGNS
PB8	ALL ON / ALL OFF

1 LIGHTING PLAN
1/8" = 1'-0"

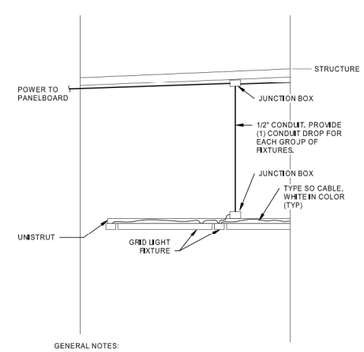

GENERAL NOTES:

1. PROVIDE TYPE 'SO' CABLE FROM JUNCTION BOX TO EACH GRID LIGHT FIXTURE. MAXIMUM OF 6 'SO' CABLES PER JUNCTION BOX. CONCEAL CABLES FROM VIEW TO GREATEST EXTENT POSSIBLE.

2. REFER TO ARCHITECTURAL DRAWINGS FOR MORE INFORMATION.

2 GRID LIGHTING MOUNTING DETAIL
12" = 1'-0"

ELECTRICAL LIGHTING GENERAL NOTES:

1. REFER TO SHEET E0.0 FOR ELECTRICAL GENERAL NOTES.
2. REFER TO SHEET E3.2 FOR LIGHT FIXTURE SCHEDULE.
3. [#] ADJACENT TO LIGHT FIXTURE INDICATES WHICH CIRCUIT FIXTURE SHALL BE CONNECTED TO ON DUAL-CIRCUIT LIGHT FIXTURES.
4. REFER TO PANELBOARD SCHEDULES ON SHEET E3.1 AND LIGHTING ZONE CONTROL SCHEDULE ON SHEET E3.2 FOR CIRCUIT ASSIGNMENTS RELATED TO LIGHTING CONTROL.

☐ ELECTRICAL LIGHTING PLAN NOTES

1 GENERAL AND EMERGENCY EGRESS LIGHTING OUTSIDE OF TENANT SPACE IS RESPONSIBILITY OF LANDLORD.
2 CEILING MOUNTED OCCUPANCY SENSOR AND POWER PACK WITH LOW VOLTAGE MANUAL OVERRIDE SWITCH(ES). REFER TO LIGHTING CONTROL DEVICE SCHEDULE AND DETAIL 2 ON SHEET E3.2 FOR ADDITIONAL INFORMATION.
3 WALL MOUNTED OCCUPANCY SENSOR. REFER TO LIGHTING CONTROL DEVICE SCHEDULE ON SHEET E3.2 FOR ADDITIONAL INFORMATION.
4 MASTER LIGHTING OVERRIDE SWITCH. REFER TO DETAIL 1 ON SHEET E3.2 FOR ADDITIONAL INFORMATION AND ARRANGEMENT OF MASTER SWITCH, LOCAL LIGHTING CONTROL SWITCHES, SECURITY/AUDIO DEVICES, AND HVAC DEVICES. REFER TO DETAIL 2 ON SHEET E3.2 FOR LIGHTING CONTROL DIAGRAM.
5 LOW VOLTAGE SWITCH FOR MANUAL CONTROL OF LIGHT FIXTURES. WHEN TWO LOW VOLTAGE SWITCHES ARE ADJACENT, LOCATE UNDER A SINGLE COVERPLATE. LIGHT SWITCHES SHALL BE LOCATED DIRECTLY NEXT TO DOOR FRAME AND SHALL HAVE PRIORITY OVER OTHER DEVICES LOCATED NEARBY (SUCH AS VOLUME CONTROLS, HVAC SENSORS, ETC). REFER TO LIGHTING CONTROL DEVICE SCHEDULE ON SHEET E3.2 FOR ADDITIONAL INFORMATION.
6 COORDINATE LIGHT FIXTURE AND EXIT SIGN LAYOUT IN STOCKROOM WITH SHELVING PRIOR TO INSTALLATION.
7 EMERGENCY LIGHTING. PROVIDE UNSWITCHED HOT CONDUCTOR TO EACH INTEGRAL EMERGENCY DRIVER.
8 CUSTOM COMBINATION LED PENDANT AND TRACK FIXTURE. COMBINATION FIXTURE IS WIRED SIMILAR TO TWO-CIRCUIT TRACK. PROVIDE (1) CIRCUIT WITH 0-10V DIMMING TO GENERAL LIGHT FIXTURE RUNS, AND PROVIDE (1) NON-DIMMING CIRCUIT TO DISPLAY TRACK SECTIONS.
9 LOCAL LOW VOLTAGE DIMMING SWITCH FOR CONTROL OF FITTING AREA LIGHTS. REFER TO EMS VENDOR DRAWINGS FOR ADDITIONAL INFORMATION.
10 KEYED SWITCH TO HOLD STOCKROOM ROOM CONTROLLERS ON DURING ELECTRICAL EQUIPMENT MAINTENANCE. PROVIDE PERMANENT TYPE WRITTEN LABEL ON COVERPLATE STATING "ELECTRICAL MAINTENANCE LIGHTING".
11 GRID ORNAMENTAL LIGHT FIXTURE. PROVIDE (1) SINGLE GANG JUNCTION BOX MOUNTED AT STRUCTURE. REFER TO DETAIL 2 ON THIS SHEET FOR ADDITIONAL INFORMATION.
12 INSTALL ROOM CONTROLLER IN AN ACCESSIBLE AND WELL-VENTILATED LOCATION. VERIFY FINAL LOCATION IN FIELD WITH CONSTRUCTION PROJECT MANAGER PRIOR TO ROUGH-IN.
13 MIRROR LIGHT. TAPE LIGHT INSTALLED ON FOUR SIDES OF MIRROR AND DRIVER MOUNTED BEHIND MIRROR. COORDINATE FINAL LOCATION WITH ARCHITECT PRIOR TO ROUGH-IN.
14 PROVIDE DIMMING SWITCH FOR MANUAL CONTROL OF LIGHT FIXTURES AND LOCKABLE SWITCH COVER. REFER TO LIGHTING CONTROL DEVICE SCHEDULE AND DETAIL 1 LIGHTING CONTROL DIAGRAM ON SHEET E3.2 FOR ADDITIONAL INFORMATION.

DRAWING USED FOR REFERENCE ONLY AND IS NOT TO BE SUBSTITUTED FOR CURRENT MEP DRAWING

Engineer:

Project Owner:

NIKE, Inc.
One Bowerman Drive
Beaverton, OR 97005
(503) 671-6453
www.nike.com

Project Address:

NIKE FACTORY STORE
WATERFORD LAKES SHOPPING CENTER
449 N. ALAFAYA TRAIL
ORLANDO, FL 32828
TEMPLATE ISSUE DATE: 11/25/2018

Fixture Package:
UNITE

Stamp:

Issued For:
PERMIT/BID

Issue Date:
11/06/2020

Revisions:

NO.	REASON	DATE

PROJECT MANAGER:
KH
CHECKED BY:
DRAWN BY:
Author

Project Number:
62301411

Sheet Title:
ELECTRICAL LIGHTING PLAN

Sheet Number:
BAS-E1.0A

DEAN W. CHANDLER

*****PRINT PLAN FULL SIZE IN COLOR*****

WATTSTOPPER LIGHTING CONTROL SEQUENCE OF OPERATION

LIGHTING ZONES CONTROLLED VIA WESCO SMART BREAKERS
AND TIME OF DAY TIME CLOCK.

- LIGHTING ZONE 1 : ATHLETE LIGHTS
- LIGHTING ZONE 3 : INTERIOR SIGNS & SHOW WINDOWS RECEPTACLES
- LIGHTING ZONE 4 : DISPLAY LIGHTS
- LIGHTING ZONE 6 : BOH PLUGMOLDS
- LIGHTING ZONE 7 : EXTERIOR SIGNS

STOCK ROOM

CONTROLLED VIA NORMAL/AFTER HOURS POINT

AFTER HOURS : SECURITY SYSTEM IS ARMED.

- LIGHTS OFF WHEN OCCUPANCY SENSOR DETECTS NO OCCUPANCY
- 15 MINUTE DELAY AFTER UNOCCUPIED STATE IS DETECTED BEFORE GOING OFF
- LIGHTS ON TO 100 PERCENT WHEN OCCUPANCY SENSOR DETECTS OCCUPANCY

NORMAL HOURS : SECURITY SYSTEM IS DISARMED

- LIGHTS CONTROLLED TO LOCAL OCCUPANCY SENSOR NETWORK
- LIGHTS DIM TO 50 PERCENT WHEN STOCK ROOM IS UNOCCUPIED.
- LIGHTS GO TO 100 PERCENT WHEN STOCK ROOM IS OCCUPIED
- MANUAL ON/OFF/DIMMING SWITCH LOCATED IN ASM OFFICE

EMPLOYEE LOUNGE, HC OFFICE AND ASM OFFICE

CONTROLLED VIA NORMAL/AFTER HOURS POINT

AFTER HOURS : SECURITY SYSTEM IS ARMED

- LIGHTS OFF WHEN OCCUPANCY SENSOR DETECTS NO OCCUPANCY
- 15 MINUTE DELAY AFTER UNOCCUPIED STATE IS DETECTED BEFORE GOING OFF
- LIGHTS ON TO 100 PERCENT WHEN OCCUPANCY SENSOR DETECTS OCCUPANCY

NORMAL HOURS : SECURITY SYSTEM IS DISARMED

- MANUAL ON/OFF/DIMMING SWITCH NEXT TO DOOR
- MANUAL ON WITH SWITCH, AUTO OFF WITH OCCUPANCY SENSOR
- 15 MINUTES DELAY AFTER UNOCCUPIED STATE IS DETECTED BEFORE GOING OFF

SALES GENERAL LIGHTING RESTROOM COORIDOR, AND FITTING ROOM LIGHTING

CONTROLLED VIA SCENE

LIGHTS OFF WHEN SITE IS UNOCCUPIED (SECURITY SYSTEM IS ARMED)

- BAS COMMANDS SCENE 3 WHICH WILL TURN ALL LIGHTS OFF.

LIGHTS ON WHEN SITE IS OCCUPIED (SECURITY SYSTEM IS DISARMED)

- DURING THE ATHLETE SCHEDULE, THE BAS COMMANDS SCENE 1 WHICH PLACES ALL GENERAL AND FITTING ROOM LIGHTS AT 50 PERCENT BRIGHTNESS
- DURING THE CUSTOMER SCHEDULE, THE BAS COMMANDS SCENE 2 WHICH PLACES ALL GENERAL AND FITTING ROOM LIGHTS AT 100 PERCENT BRIGHTNESS
- SALES AND RESTROOM COORIDOR MANUAL ON/OFF/DIMMING SWITCHES INSTALLED IN ASM OFFICE (SEE SWITCH SCHEDULE ON THIS PAGE FOR DETAILS)
- FITTING ROOM MANUAL ON/OFF/DIMMING SWITCHES INSTALLED IN FITTING ROOM (SEE SWITCH SCHEDULE ON THIS PAGE FOR DETAILS)

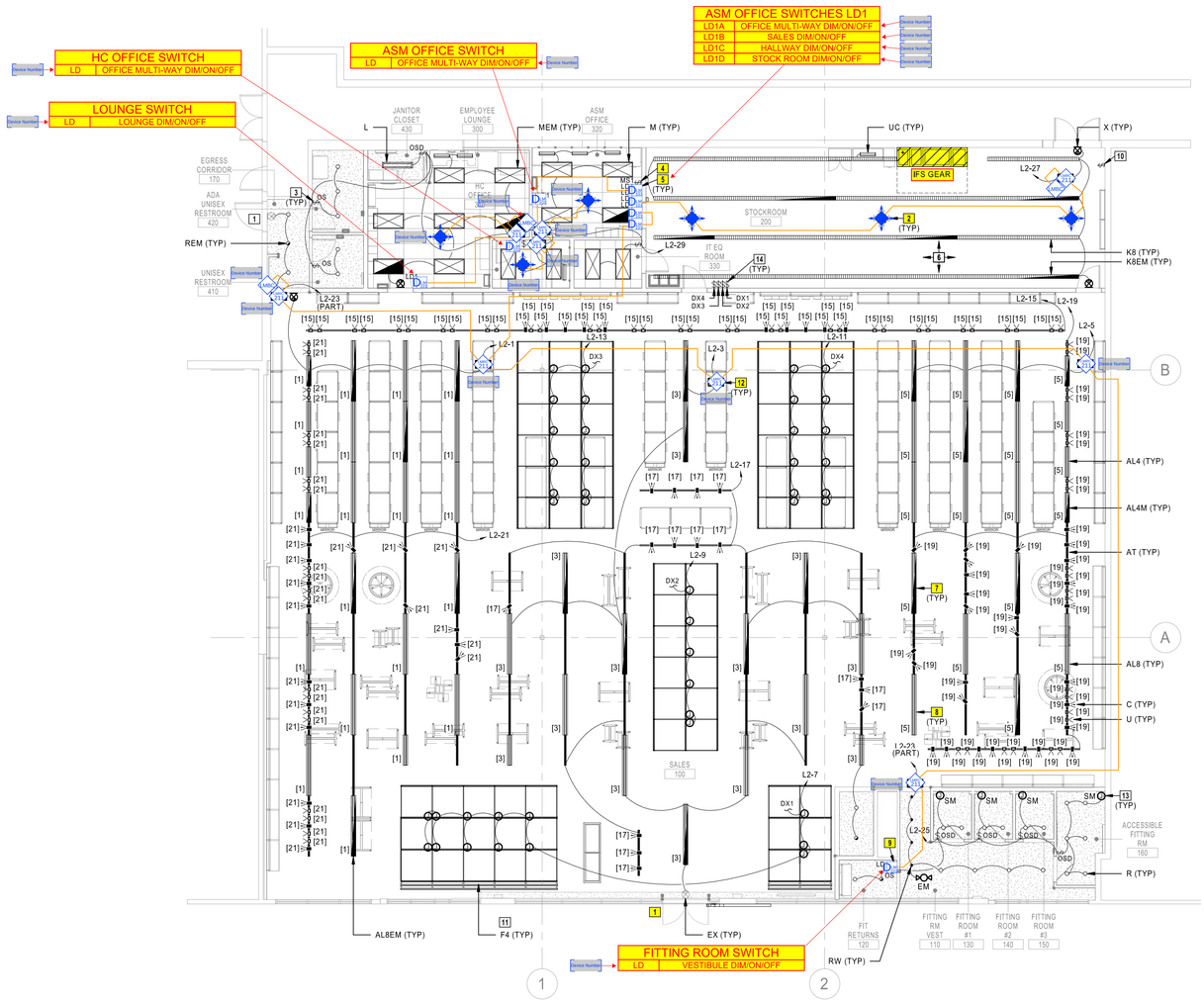

1 LIGHTING PLAN
1/8" = 1'-0"

ELECTRICAL LIGHTING GENERAL NOTES:

1. REFER TO SHEET E0.0 FOR ELECTRICAL GENERAL NOTES.
2. REFER TO SHEET E3.2 FOR LIGHT FIXTURE SCHEDULE.
3. [#] ADJACENT TO LIGHT FIXTURE INDICATES WHICH CIRCUIT FIXTURE SHALL BE CONNECTED TO ON DUAL-CIRCUIT LIGHT FIXTURES.
4. REFER TO PANELBOARD SCHEDULES ON SHEET E3.1 AND LIGHTING ZONE CONTROL SCHEDULE ON SHEET E3.2 FOR CIRCUIT ASSIGNMENTS RELATED TO LIGHTING CONTROL.

ELECTRICAL LIGHTING PLAN NOTES

1 GENERAL AND EMERGENCY EGRESS LIGHTING OUTSIDE OF TENANT SPACE IS RESPONSIBILITY OF LANDLORD.
2 CEILING MOUNTED OCCUPANCY SENSOR AND POWER PACK WITH LOW VOLTAGE MANUAL OVERRIDE SWITCH(ES). REFER TO LIGHTING CONTROL DEVICE SCHEDULE AND DETAIL 2 ON SHEET E3.2 FOR ADDITIONAL INFORMATION.
3 WALL MOUNTED OCCUPANCY SENSOR. REFER TO LIGHTING CONTROL DEVICE SCHEDULE ON SHEET E3.2 FOR ADDITIONAL INFORMATION.
4 MASTER LIGHTING OVERRIDE SWITCH. REFER TO DETAIL 1 ON SHEET E3.2 FOR ADDITIONAL INFORMATION AND ARRANGEMENT OF MASTER SWITCH, LOCAL LIGHTING CONTROL SWITCHES, SECURITY/AUDIO DEVICES, AND HVAC DEVICES. REFER TO DETAIL 2 ON SHEET E3.2 FOR LIGHTING CONTROL DIAGRAM.
5 LOW VOLTAGE SWITCH FOR MANUAL CONTROL OF LIGHT FIXTURES. WHEN TWO LOW VOLTAGE SWITCHES ARE ADJACENT, LOCATE UNDER A SINGLE COVERPLATE. LIGHT SWITCHES SHALL BE LOCATED DIRECTLY NEXT TO DOOR FRAME AND SHALL HAVE PRIORITY OVER OTHER DEVICES LOCATED NEARBY (SUCH AS VOLUME CONTROLS, HVAC SENSORS, ETC). REFER TO LIGHTING CONTROL DEVICE SCHEDULE ON SHEET E3.2 FOR ADDITIONAL INFORMATION.
6 COORDINATE LIGHT FIXTURE AND EXIT SIGN LAYOUT IN STOCKROOM WITH SHELVING PRIOR TO INSTALLATION.
7 EMERGENCY LIGHTING. PROVIDE UNSWITCHED HOT CONDUCTOR TO EACH INTEGRAL EMERGENCY DRIVER.
8 CUSTOM COMBINATION LED PENDANT AND TRACK FIXTURE. COMBINATION FIXTURE IS WIRED SIMILAR TO TWO-CIRCUIT TRACK. PROVIDE (1) CIRCUIT WITH 0-10V DIMMING TO GENERAL LIGHT FIXTURE RUNS, AND PROVIDE (1) NON-DIMMING CIRCUIT TO DISPLAY TRACK SECTIONS.
9 LOCAL LOW VOLTAGE DIMMING SWITCH FOR CONTROL OF FITTING AREA LIGHTS. REFER TO EMS VENDOR DRAWINGS FOR ADDITIONAL INFORMATION.
10 KEYED SWITCH TO HOLD STOCKROOM ROOM CONTROLLERS ON DURING ELECTRICAL EQUIPMENT MAINTENANCE. PROVIDE PERMANENT TYPE WRITTEN LABEL ON COVERPLATE STATING "ELECTRICAL MAINTENANCE LIGHTING".
11 GRID ORNAMENTAL LIGHT FIXTURE. PROVIDE (1) SINGLE GANG JUNCTION BOX MOUNTED AT STRUCTURE. REFER TO DETAIL 2 ON THIS SHEET FOR ADDITIONAL INFORMATION.
12 INSTALL ROOM CONTROLLER IN AN ACCESSIBLE AND WELL-VENTILATED LOCATION. VERIFY FINAL LOCATION IN FIELD WITH CONSTRUCTION PROJECT MANAGER PRIOR TO ROUGH-IN.
13 MIRROR LIGHT. TAPE LIGHT INSTALLED ON FOUR SIDES OF MIRROR AND DRIVER MOUNTED BEHIND MIRROR. COORDINATE FINAL LOCATION WITH ARCHITECT PRIOR TO ROUGH-IN.
14 PROVIDE DIMMING SWITCH FOR MANUAL CONTROL OF LIGHT FIXTURES AND LOCKABLE SWITCH COVER. REFER TO LIGHTING CONTROL DEVICE SCHEDULE AND DETAIL 1 LIGHTING CONTROL DIAGRAM ON SHEET E3.2 FOR ADDITIONAL INFORMATION.

LIGHT FIXTURE SCHEDULE

TYPE	MANUFACTURER / MODEL #	LAMPING / LIGHT SOURCE	DIMMING TYPE	VOLTAGE	INPUT WATTS	INPUT VA	DESCRIPTION	NOTES
AL_	AMERLUX #PROD-A16-BAT80-ASW20-10-35-ST-120/277-X'-CON-0-10V-COMBO	LED	0-10V	120	10/FT	10/FT	PRODUCER COMBO CUSTOM RUNS - BAT80 LED PRODUCER 3500K 10W/FT. FACTORY WIRED INSTALLED PER RUN LENGTHS	
AL_M	AMERLUX #PROD-A16-BAT80-ASW20-10-35-ST-120/277-X'-CON-0-10V-COMBO	LED	0-10V	120	10/FT	10/FT	SAME AS AL_ EXCEPT WITH EMERGENCY BATTERY BACK-UP CAPABLE OF PRODUCING 1000 LUMENS FOR 90 MINUTES MINIMUM.	
AT	AMERLUX #PROD	TRACK	-	120	-	-	PRODUCER COMBO CUSTOM RUNS - CONTECH SINGLE CIRCUIT 120V TRACK. FACTORY WIRED INSTALLED PER RUN LENGTHS	
C	LF ILLUMATION# TXA01-C-J-19C-9230-M-D1-1-SS	LED	-	120/277	19	19	LED TRACK HEAD 2300LUMEN 3000K SILVER INCLUDES SPOT & FLOOD OPTICS	
F4	BARTCO # BFL800-1S-32-120MKX-SL	FLUORESCENT 13T8/48-3500	-	120/277	13	13	CHEVRON FIXTURE	1
K8	MERCURY # MM-132-OCT-C-8T-ELBD-ET8DRVR-UNI	FLUORESCENT 13T8/48-3500	0-10V	120/277	26	26	8'-0" STRIP FIXTURE. PROVIDE WITH ADVANCE T8 DRIVER FACTORY INSTALLED, INCLUDES WIREGUARD	1
K8EM	MERCURY # MM-132-OCT-C-8T-ELBD-ET8DRVR-UNI-B50	FLUORESCENT 13T8/48-3500	0-10V	120/277	26	26	SAME AS K8, EXCEPT WITH EMERGENCY BATTERY BACK-UP CAPABLE OF PROVIDING 500 LUMENS FOR 90 MINUTES MINIMUM.	1
L	CREE# LS4-40L-35K-10V	LED	0-10V	120/277	40	40	4'-0" LED SURFACE WRAP FIXTURE.	
LB	CONTECH LUXBEAM SYSTEM #LB122-X-S	TRACK	-	120	-	-	SINGLE CIRCUIT LUXBEAM SILVER - PROVIDE LENGTHS AS REQUIRED FOR CONTINUOUS RUN COORDINATE WITH MANUFACTURER AND PROVIDE ALL ACCESSORIES REQUIRED FOR COMPLETE INSTALLATION.	
M	PHILIPS #2FGG42B835-4-D-UNV-DIM	LED	0-10V	120/277	35	35	RECESSED 2'x4' LED FIXTURE PROVIDE DRYWALL MOUNTING KIT WHERE REQUIRED.	
MEM	PHILIPS #2FGG42B835-4-D-UNV-DIM-EMLED	LED	0-10V	120/277	35	35	SAME AS M, EXCEPT WITH EMERGENCY BATTERY BACK-UP. 1100 LUMEN, 90 MINUTE MIN.	
R	INTENSE #SS6G3DR-L3-358-0-10VEM7 / IC630CSFW	LED	0-10V	120	19	21	RECESSED 6" LED DOWNLIGHT WITH REMOTE PHOSPHOR TECHNOLOGY, CLEAR OPEN REFLECTOR, SELF FLANGED WHITE TRIM. 1100 DELIVERED LUMENS MINIMUM. 3000K, 80+ CRI, 50,000 HOURS WITH INTEGRAL ELECTRONIC DRIVER.	
REM	INTENSE #SS6G3DR-L3-358-0-10VEM7 / IC630CSFW	LED	0-10V	120	19	21	SAME AS R, EXCEPT WITH EMERGENCY BATTERY BACK-UP CAPABLE OF PRODUCING 450 LUMENS FOR 90 MINUTES MINIMUM.	
RW	INTENSE #GD4WRL335-D101 IRW400C-SFW	LED	0-10V	120	34	34	WALL WASH 4" LED DOWNLIGHT WITH CLEAR OPEN REFLECTOR AND SELF FLANGED WHITE TRIM. 3500K, 80+ CRT, DIMMABLE.	
SM	CONTECH #TLT12V2	LED	0-10V	120	1.5/FT	1.5/FT	PROVIDE EACH MIRROR WITH 50W 0-10V DIMMING DRIVER. COORDINATE EXACT NUMBER OF DRIVERS WITH LIGHTING VENDOR, AND LOCATIONS AND ACCESSORIES WITH ARCHITECT PRIOR TO ORDERING.	
U	CONTECH #CTL182H35DS	LED	-	120/277	41	41	LED WALL WASH HEAD 4700LUMEN 3000K SILVER	
UC	MERCURY LIGHTING #LUC5-8-LED-24-120V	LED	-	120	20	24	UNDERCABINET 2'-0" TASK LIGHT LED FIXTURE WITH ROCKER SWITCH	
EM	EVENLITE #APR-25-LC-U-SD	LED	-	120/277	50	50	EMERGENCY CONCEALED LIGHT WITH EMERGENCY BATTERY BACK-UP CAPABLE OF PRODUCING 900 LUMENS FOR 90 MINUTES MINIMUM. W- WALL MOUNTED AT 8'-0" AFF	
X	LIGHTALARMS #QLXN500-R	LED	-	120/277	5	5	UNIVERSAL MOUNT EXIT SIGN WITH WHITE HOUSING AND RED LETTERS. EMERGENCY BATTERY BACK-UP CAPABLE OF POWERING FIXTURE FOR 90 MINUTES MINIMUM.	

GENERAL NOTES:

A. ALL FIXTURES PURCHASED AND FURNISHED BY OWNER. COORDINATE WITH OWNER CONSTRUCTION PROJECT MANAGER FOR ALL LIGHTING.
B. CONFIRM MOUNTING, FINISH, ACCESSORIES, LAMP COLOR TEMPERATURE, BEAM SPREAD, ETC. WITH ARCHITECT DRAWINGS FOR ALL LIGHT FIXTURES PRIOR TO ORDERING.
C. VERIFY CEILING CONDITIONS AND COORDINATE LIGHT FIXTURE MOUNTING HARDWARE AND TRIMS NEEDED TO SUIT CEILING CONDITIONS PRIOR TO ORDERING.
D. REFER TO ARCHITECTURAL DRAWINGS AND DETAILS FOR FINAL LOCATIONS, MOUNTING HEIGHTS, AND ADDITIONAL MOUNTING INFORMATION. CONTACT ARCHITECT IMMEDIATELY IF THERE ARE DISCREPANCIES BETWEEN THE ARCHITECTURAL AND ELECTRICAL LIGHTING PLANS.
E. REFER TO SPECIFICATIONS FOR ACCEPTABLE LAMP AND BALLAST MANUFACTURERS AND ADDITIONAL INFORMATION.
F. REFER TO PANELBOARD SCHEDULES, DETAILS ON THIS SHEET, AND EMS VENDOR DRAWINGS FOR CONTROL INFORMATION.
G. PROVIDE A MINIMUM OF 12 LAMPS OF EACH TYPE DESIGNATED AS SPARE FOR OWNER USE. LAMPS THAT BURN OUT DURING CONSTRUCTION PRIOR TO OPENING ARE THE RESPONSIBILITY OF THE CONTRACTOR TO REPLACE AND SHALL NOT COME OUT OF THE DESIGNATED SPARE LAMPS FOR OWNER USE.
H. COORDINATE WITH AMERLUX FOR EXACT FIXTURE MODEL NUMBERS. PROVIDE ALL PARTS, PIECES, ETC. REQUIRED FOR A COMPLETE AND FUNCTIONAL SYSTEM.

NETWORK LIGHTING CONTROL SYSTEMS

NETWORK OCCUPANCY SENSORS

SYMBOL TAG	MANUFACTURER MODEL/SERIES	ALTERNATE MANUFACTURER	DEVICE DESCRIPTION	COVERAGE (W X D)	VOLTAGE	NOTES
A	LEGRAND LMDC-100	-	CEILING MOUNT DUAL TECHNOLOGY OCCUPANCY SENSOR. FURNISHED BY EMS VENDOR, INSTALLED BY CONTRACTOR.	PIR MAJOR 32' Ø PIR MINOR 15' Ø ULT MAJOR 25' x 25'	24	

NETWORK ROOM CONTROLLERS (POWER PACK)

SYMBOL TAG	MANUFACTURER MODEL/SERIES	ALTERNATE MANUFACTURER	DEVICE DESCRIPTION	VOLTAGE	NOTES
RD1	LEGRAND LMRC-211	-	DIGITAL ROOM CONTROLLER FOR ON/OFF/0-10V DIMMING CONTROL OF LIGHTING LOADS. FURNISHED BY EMS VENDOR, INSTALLED BY CONTRACTOR.	120/ 277	

NETWORK LIGHTING SWITCHES

SYMBOL TAG	MANUFACTURER MODEL/SERIES	ALTERNATE MANUFACTURER	DEVICE DESCRIPTION	VOLTAGE	NOTES
LV1	LEGRAND LMSW-100 SERIES	-	DIGITAL MULTI-BUTTON SWITCH FOR MANUAL ON/OFF AND SCENE CONTROL. FURNISHED BY EMS VENDOR, INSTALLED BY CONTRACTOR.	24	
LD1	LEGRAND LMDM-101	-	DIGITAL SWITCH FOR MANUAL ON/OFF/DIMMING CONTROL. FURNISHED BY EMS VENDOR, INSTALLED BY CONTRACTOR.	24	

AUXILIARY NETWORK LIGHTING EQUIPMENT

SYMBOL TAG	MANUFACTURER MODEL/SERIES	ALTERNATE MANUFACTURER	DEVICE DESCRIPTION	VOLTAGE	NOTES
B	LEGRAND LMBC-300	-	WIRED NETWORK BRIDGE TO CONNECT DLM ROOM CONTROLLERS TO BACNET NETWORK. FURNISHED BY EMS VENDOR, INSTALLED BY CONTRACTOR.	24	

WATTSTOPPER INSTALLATION NOTES

1. PRINT THIS DRAWING IN FULL SIZE FOR USE DURING THE INSTALL.
2. PULL DLM NETWORK CABLE AS DESCRIBED IN THIS DETAIL AND THE WATTSTOPPER SUBMITTAL THAT WILL BE ISSUED AFTER THE IFC SET IS.
3. PULL DIMMING CONTROL WIRE AS DESCRIBED IN THE GENERIC WATTSTOPPER DETAIL IN THE BAS DRAWING SET AND WATTSTOPPER SUBMITTAL.
4. AS YOU INSTALL THE DEVICES, EACH BOX WILL INCLUDE A STICKER WITH A SERIAL NUMBER. THIS SHOULD MATCH WHAT IS ON THE DEVICE ITSELF. TAKE THE STICKER AND PLACE ON THE BOX NEXT TO THE LOCATION OF THE DEVICE ON THE PRINT.
5. ONCE THE INSTALL IS COMPLETE AND THE DLM NETWORK IS RAN BETWEEN DEVICES AND ALL SERIAL NUMBERS HAVE BEEN PLACED ON THE PRINTS, SET PRINT ASIDE AND GIVE TO CSUSA FIELD ENGINEER DURING COMMISSIONING.
6. ANY QUESTIONS DURING THE INSTALL CAN BE ANSWERED BY PAUL SAWYER @ 317-246-5170.

SYMBOL	DESCRIPTION	QTY	COMMENTS
LMBC	LMBC-300	3	V.2 NETWORK BRIDGE MODULE DLM
	LMDC-100	6	DIGITAL DUAL TECH CEILING MOUNT SENSOR
DIM 101	LMDM-101-W	8	DIGITAL DIMMING WALL SWITCH, 1 PADDLE, W/ I.R.
LMLS 400	LMLS-400	0	DLM DAYLIGHTING SENSOR, ON/OFF/DIMMING, MULTI-CHANNEL.
LMRC 211	LMRC-211	10	DIGITAL V.2 SINGLE RELAY ROOM CONTROLLER, ON/OFF/0-10V DIMMING, 16 AMPERS
LMRC 221	LMRC-221	0	FORWARD PHASE DIMMING SINGLE RELAY ROOM CONTROLLER, 16 AMPERES
	CLS-EXP-DIMU	0	CRESTRON UNIVERSAL DIMMER EXPANSION MODULE.
	DLM NETWORK WIRE		FIELD PROVIDED, PLENUM RATED CAT5 DLM NETWORK WIRING TERMINATED ON EACH END WITH RJ45 PLUG. WINDY CITY WIRE : 555610 OR EQUAL
	DIMMING CONTROL WIRE		0-10VDC DIMMING CONTROL WIRE, PLENUM RATED. FIELD VERIFY EXACT ROUTE OF DIMMING CABLE. WINDY CITY WIRE : 002360GP OR EQUAL

DRAWING USED FOR REFERENCE ONLY AND IS NOT TO BE SUBSTITUTED FOR CURRENT MEP DRAWING

Engineer:

Project Owner:

NIKE, Inc.
One Bowerman Drive
Beaverton, OR 97005
(503) 671-6453
www.nike.com

Project Address:

NIKE FACTORY STORE
WATERFORD LAKES SHOPPING CENTER
449 N. ALAFAYA TRAIL
ORLANDO, FL 32828
TEMPLATE ISSUE DATE: 11/26/2018

Fixture Package:
UNITE

Stamp:

Issued For:
PERMIT/BID

Issue Date:
11/06/2020

Revisions:

NO.	REASON	DATE

PROJECT MANAGER:
KH
CHECKED BY:
DRAWN BY:
Author

Project Number:
62301411

Sheet Title:
ELECTRICAL LIGHTING PLAN

Sheet Number:
BAS-E1.0B

DEAN W. CHANDLER

LIGHTING COLOR CODE		
ZONE 1	ATHLETE	GREEN
ZONE 2	CUSTOMER	CYAN
ZONE 3	SHOW WINDOWS	LIGHT PINK
ZONE 4	SALES DISPLAY	ORANGE
ZONE 5	STOCK ROOM	PURPLE
ZONE 6	BOH PLUGMOLD	PINK
ZONE 7	EXT. SIGNS	RED

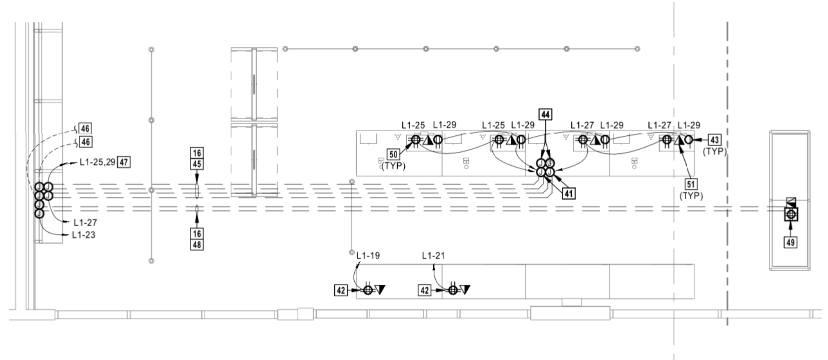

③ ENLARGED CASH WRAP POWER PLAN
1/4" = 1'-0"

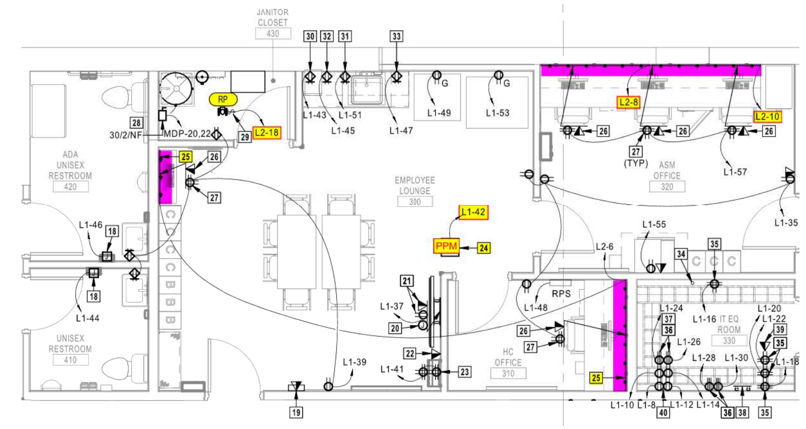

② ENLARGED BACK OF HOUSE POWER PLAN
1/4" = 1'-0"

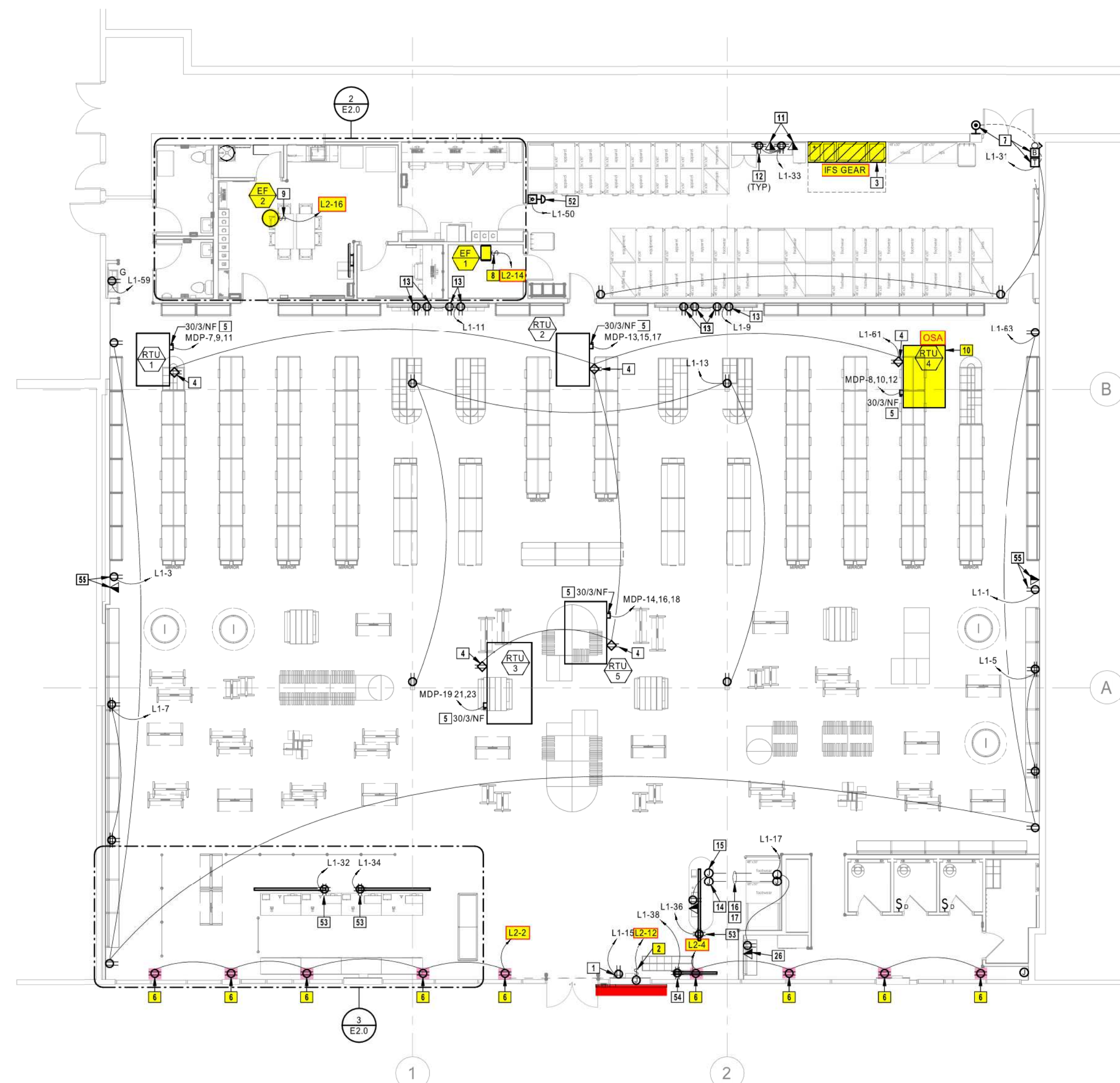

① POWER PLAN
1/8" = 1'-0"

ELECTRICAL POWER GENERAL NOTES:

1. REFER TO SHEET E0.0 FOR ELECTRICAL GENERAL NOTES.
2. REFER TO SHEET E2.1 FOR DATA CONDUIT REQUIREMENTS AND COORDINATION.

ELECTRICAL POWER PLAN NOTES

1 ELECTRONIC ARTICLE SURVEILLANCE (EAS) SYSTEM. COORDINATE REQUIREMENTS WITH SYSTEM SUPPLIER AND PROVIDE ALL CONCEALED AND UNDER SLAB RACEWAYS, LINE VOLTAGE AND LOW VOLTAGE CONDUCTORS, ETC., AS NECESSARY FOR A COMPLETE AND FUNCTIONAL SYSTEM.

2 BUILDING SIGNAGE. PROVIDE WEATHERPROOF JUNCTION BOX WITH LOCKABLE TOGGLE DISCONNECT SWITCH AND CONNECT TO SIGNAGE AS REQUIRED. COORDINATE FINAL LOCATION AND REQUIREMENTS WITH SIGN INSTALLER AND ARCHITECT PRIOR TO ROUGH-IN.

3 EMS PANEL PROVIDED IN IFS SWITCHBOARD. PROVIDE CONNECTION OF TELE/DATA LINES TO KRONE FRAME AND TERMINATE AS DIRECTED BY NIKE IT DEPARTMENT. CONNECTION FOR CISCO SWITCHES (SWITCH 1 OR SWITCH 2) SHALL BE CONNECTED TO ANY PORT BETWEEN 13 AND 20. COORDINATE ALL REQUIREMENTS WITH EMS CONTRACTOR PRIOR TO ROUGH-IN AND FINAL CONNECTIONS.

4 CONVENIENCE RECEPTACLE. PROVIDE CONNECTION TO WEATHER RESISTANT GFCI TYPE RECEPTACLE IN WEATHER PROOF IN-USE ENCLOSURE (WP/GFCI/WR) INTEGRAL TO MECHANICAL EQUIPMENT. DO NOT POWER RECEPTACLE THROUGH UNIT. PROVIDE 120V HOME RUN AS INDICATED. COORDINATE FINAL LOCATION WITH MECHANICAL CONTRACTOR PRIOR TO ROUGH-IN.

5 ROOFTOP UNIT. PROVIDE CONNECTION TO DISCONNECT SWITCH INTEGRAL TO MECHANICAL EQUIPMENT. COORDINATE FINAL LOCATION, REQUIREMENTS AND POWER CONNECTION WITH MECHANICAL CONTRACTOR PRIOR TO ROUGH-IN.

6 SHOW WINDOW/DISPLAY WINDOW RECEPTACLE MOUNTED HORIZONTALLY WITHIN 18" ABOVE TOP OF WINDOW TO CENTER OF RECEPTACLE OR RECESSED WITHIN DISPLAY/SOFFIT. COORDINATE EXACT LOCATION WITH OTHER CEILING ELEMENTS. COVERPLATE FINISH SHALL MATCH SURROUNDING WALL COLOR.

7 RECEIVING BELL, PUSH BUTTON AND TRANSFORMER. PROVIDE PUSH BUTTON, EDWARDS #1786C-B, MOUNTED AT 48" ABOVE FINISHED GRADE. PROVIDE BELL, EDWARDS #340-4G5, MOUNTED AT STRUCTURE ABOVE. PROVIDE TRANSFORMER, EDWARDS #592, MOUNTED NEXT TO BELL AT STRUCTURE. CONNECT ALL DEVICES AND PROVIDE ANY NECESSARY COMPONENTS TO ENSURE A FULLY FUNCTIONAL SYSTEM.

8 EXHAUST FAN TO BE INTERCONNECTED WITH TEMPERATURE SENSOR IN AV ROOM. PROVIDE CONNECTION TO DISCONNECT SWITCH INTEGRAL TO MECHANICAL EQUIPMENT AND COORDINATE INTERCONNECTION WITH MECHANICAL AND CONTROLS CONTRACTORS PRIOR TO ROUGH-IN.

9 EXHAUST FAN. PROVIDE CONNECTION TO DISCONNECT SWITCH INTEGRAL TO MECHANICAL EQUIPMENT. COORDINATE FINAL LOCATION, REQUIREMENTS AND POWER CONNECTION WITH MECHANICAL CONTRACTOR PRIOR TO ROUGH-IN.

10 EMS SENSOR MAST. PROVIDE 3/4" CONDUIT FROM OPUS CONTROL PANEL TO JUNCTION BOX MOUNTED TO UNDERSIDE OF ROOF. PROVIDE 3/4" RIGID CONDUIT WITH PULL WIRE FROM JUNCTION BOX TO EMS SENSOR MAST ON ROOF. SEAL ROOF PENETRATION PER SPECIFICATIONS. CONFIRM FINAL REQUIREMENTS, MOUNTING, LOCATIONS, AND CONDUIT ROUTING WITH MECHANICAL CONTRACTOR AND EMS VENDOR PRIOR TO ROUGH-IN.

11 DATA OUTLET, LOCATED W THIN 10" OF QUAD RECEPTACLE. PROVIDE SQUARE 4-11/16" X 2-1/2" JUNCTION BOX WITH SINGLE GANG MUD RING MOUNTED AT 15" AFF UNLESS NOTED OTHERWISE. PROVIDE 1" CONDUIT FOR (2) DATA AND (2) VOICE CABLES ROUTED TO TELEPHONE BACKBOARD. REFER TO DETAIL 4 ON SHEET E3.3 FOR VOICE/DATA OUTLET CONFIGURATION.

12 ALL DEVICES SHOWN IN THIS AREA EXCEPT PLUGMOLD SHALL BE MOUNTED BELOW COUNTER UNLESS NOTED OTHERWISE.

13 FOOTWEAR INITIATIVE. REFER TO ARCHITECTURAL DRAWINGS FOR ELEVATIONS AND MOUNTING LOCATIONS.

14 PROVIDE (1) PULL BOX IN SERVICE HUB MOUNTED AT 6" AFF FOR DATA. COORDINATE FINAL LOCATION WITH OWNER AND CABINETRY PROVIDER PRIOR TO ROUGH-IN. ROUTE 1" FLEX CONDUIT TO RECEPTACLE FROM THE TOP OF THE PULL BOX.

15 PROVIDE (1) JUNCTION BOXES IN SERVICE HUB MOUNTED AT 6" AFF FOR POWER. COORDINATE FINAL LOCATION WITH OWNER AND CABINETRY PROVIDER PRIOR TO ROUGH-IN. ROUTE 1" FLEX CONDUIT FROM THE TOP OF THE JUNCTION BOX.

16 SAW CUT AND TRENCH AS REQUIRED FOR ELECTRICAL AND DATA CONDUITS. REPAIR TRENCH TO MATCH SURROUNDING CONSTRUCTION, MATERIALS AND FINISHES. COORDINATE ALL CUTTING/TRENCHING WITH OWNER AND LANDLORD REPRESENTATIVE PRIOR TO STARTING WORK. REFER TO ARCHITECTURAL DEMOLITION AND NEW WORK PLANS FOR ADDITIONAL INFORMATION.

17 ROUTE (1) 1-1/2" POWER AND (1) 1-1/2" DATA CONDUIT FROM SERVICE HUB WALL INTO JUNCTION BOXES AT STRUCTURE ABOVE.

18 HAND DRYER. PROVIDE JUNCTION BOX AT 42" AFF AND CONNECT TO EQUIPMENT. COORDINATE FINAL LOCATION AND ELECTRICAL REQUIREMENTS WITH ARCHITECT AND MANUFACTURER PRIOR TO ROUGH-IN.

19 EMPLOYEE TIME CLOCK. PROVIDE 4-11/16" X 2-1/2" JUNCTION BOX WITH SINGLE GANG MUD RING. PROVIDE 1" CONDUIT FOR (1) DATA AND (1) VOICE CABLES ROUTED TO IT EQUIPMENT ROOM. COORDINATE FINAL LOCATION AND MOUNTING HEIGHT WITH ARCHITECT PRIOR TO ROUGH-IN.

20 SATELLITE EQUIPMENT. PROVIDE 1" CONDUIT FROM TELEVISION EQUIPMENT TO JUNCTION BOX MOUNTED TO UNDERSIDE OF ROOF. PROVIDE 1" RIGID CONDUIT WITH PULL WIRE FROM JUNCTION BOX TO SATELLITE EQUIPMENT ON ROOF. SEAL ROOF PENETRATION PER SPECIFICATIONS. CONFIRM FINAL REQUIREMENTS, MOUNTING, LOCATIONS, AND CONDUIT ROUTING WITH ARCHITECT PRIOR TO ROUGH-IN.

21 WALL MOUNTED TELEVISION. MOUNT RECEPTACLE AND DATA OUTLET AT 7'-10" A.F.F. COORDINATE FINAL LOCATION AND MOUNTING HEIGHT WITH ARCHITECT PRIOR TO ROUGH-IN.

22 TELEVISION TOUCHPAD. PROVIDE DATA OUTLET AT 48" AFF. REFER TO ARCHITECTURAL DRAWINGS FOR ADDITIONAL INFORMATION.

23 RADIO DOCKING STATION. PROVIDE (2) 20 AMP QUAD RECEPTACLES FOR POWER FOR RADIO DOCKING STATION. COORDINATE EXACT LOCATION AND MOUNTING HEIGHT WITH ARCHITECT PRIOR TO ROUGH-IN.

24 DIFFUSER POWER MODULE FOR MODULATING DIFFUSERS. PROVIDE JUNCTION BOX MOUNTED ABOVE ACCESSIBLE CEILING. COORDINATE FINAL LOCATION, POWER REQUIREMENTS AND CONNECTIONS TO DAMPERS AND DIFFUSERS WITH MECHANICAL CONTRACTOR AND EMS SYSTEM PROVIDER PRIOR TO ROUGH-IN. REFER TO EMS DRAWINGS FOR ADDITIONAL INFORMATION.

25 DESK PLUGMOLD, WIREMOLD WH20GB606TRUSB OR APPROVED EQUAL PROVIDED BY OTHERS. PROVIDE PERMANENT LABEL STATING 'SWITCHED' SHOWING RECEPTACLES ARE CONTROLLED BY THE EMS SYSTEM. PROVIDE JUNCTION BOX AND PLUGMOLD AT 4" ABOVE COUNTER BACKSPLASH. CUT STANDARD PLUGMOLD LENGTHS AS NEEDED TO FIT AREAS INDICATED.

26 DATA OUTLET, LOCATED W THIN 10" OF RECEPTACLE. PROVIDE SQUARE 4-11/16" X 4-11/16" X 2-1/2" JUNCTION BOX WITH SINGLE GANG MUD RING MOUNTED AT 15" AFF UNLESS NOTED OTHERWISE. PROVIDE 1" CONDUIT FOR (1) DATA AND (1) VOICE CABLES ROUTED TO IT EQUIPMENT ROOM. REFER TO DETAIL 3 ON SHEET E3.3 FOR VOICE/DATA OUTLET CONFIGURATION.

27 ALL DEVICES SHOWN, EXCEPT PLUGMOLD, SHALL BE MOUNTED BELOW COUNTER UNLESS NOTED OTHERWISE.

28 WATER HEATER. PROVIDE 2-POLE NON-FUSED DISCONNECT SWITCH IN NEMA 1 ENCLOSURE. COORDINATE FINAL LOCATION WITH DIVISION 22 CONTRACTOR TO ENSURE SWITCH IS ACCESSIBLE AND ALL CODE REQUIRED CLEARANCES ARE MET.

29 HOT WATER RECIRCULATION PUMP. PROVIDE 1-POLE MOTOR RATED TOGGLE DISCONNECT SWITCH. COORDINATE FINAL LOCATION AND REQUIREMENTS WITH DIVISION 22 CONTRACTOR.

30 MICROWAVE RECEPTACLE MOUNTED BELOW COUNTER TOP AT 26" AFF. COORDINATE FINAL LOCATION WITH ARCHITECT PRIOR TO ROUGH-IN.

31 RECEPTACLE FOR WATER FILTER LOCATED ON COUNTER. COORDINATE EXACT LOCATION AND POWER REQUIREMENTS WITH PLUMBING CONTRACTOR PRIOR TO ROUGH-IN.

32 MOUNT RECEPTACLE HORIZONTALLY 4" ABOVE COUNTER BACKSPLASH.

33 COFFEE MAKER LOCATED ON COUNTERTOP. MOUNT RECEPTACLE HORIZONTALLY 4" ABOVE COUNTER BACKSPLASH.

34 PROVIDE 1" CONDUIT FROM LADDER TRAY TO JUNCTION BOX AT SALES FLOOR, REFER TO DETAIL 6 ON SHEET E3.3 FOR ADDITIONAL INFORMATION.

35 PROVIDE DOUBLE DUPLEX RECEPTACLE FOR IT/SECURITY EQUIPMENT, EACH WITH A DEDICATED NEUTRAL AND GROUND. REFER TO DETAIL 6 ON SHEET E3.3 FOR ADDITIONAL INFORMATION.

36 PROVIDE L5-20R RECEPTACLE WITH A DEDICATED NEUTRAL AND GROUND ABOVE CABINET. REFER TO DETAIL 6 ON SHEET E3.3 FOR ADDITIONAL INFORMATION.

37 A/V HEAD-END EQUIPMENT/CABINET BY OTHERS. (3) 48 PORT PANELS MOUNTED WITHIN CABINET. PROVIDE 1" CONDUIT WITH PULL WIRE TO CABLE TV SERVICE ENTRANCE. MAKE CONNECTIONS AS DIRECTED BY NIKE PROJECT MANAGER.

38 PROVIDE INSULATED COPPER GROUND FROM NIKE IT GROUND BAR TO MAIN GROUND BAR IN IFS GEAR. REFER TO E3.0 FOR GROUND WIRE SIZE AND DETAIL 6 ON SHEET E3.3 FOR GROUND BAR LOCATION. PROVIDE GROUNDING KIT FOR CUPRO-COTE CAT.#A290-GRD.

39 SECURITY PHONE OUTLET. REFER TO DETAIL 6 ON SHEET E3.3 FOR ADDITIONAL INFORMATION.

40 PROVIDE (4) 20-AMP DUPLEX RECEPTACLES, EACH WITH A DEDICATED NEUTRAL AND GROUND, FOR LED TICKER POWER MODULE EQUIPMENT IN A/V CABINET.

41 PROVIDE (2) JUNCTION BOXES IN CASHWRAP MOUNTED AT 6" AFF FOR POWER. COORDINATE FINAL LOCATION WITH OWNER AND CABINETRY PROVIDER PRIOR TO ROUGH-IN. REFER TO DETAIL 7 ON SHEET E3.3 FOR ADDITIONAL INFORMATION. ALL 1" FLEX CONDUITS DAISY-CHAINED TO EACH RECEPTACLE TO BE ROUTED FROM THE TOP OF THE JUNCTION BOXES.

42 DRILL 2" OPENING IN BACK OF FIXTURE AND PROVIDE 20 AMP, DOUBLE DUPLEX RECEPTACLE, SURFACE MOUNTED ON BACK WALL ABOVE TOP SHELF. RECEPTACLE SHALL BE MOUNTED AT 26" AFF TO BOTTOM AND 48" FROM END OF FIXTURE TO SIDE OF RECEPTACLE. RECEPTACLE BOX SHALL CONCEAL 2" OPENING. COORDINATE INSTALLATION WITH FIXTURE VENDOR PRIOR TO ROUGH-IN.

43 20 AMP DUPLEX RECEPTACLE FOR GENERAL POWER. PROVIDE 1" FLEXIBLE TYPE CONDUIT ROUTED THROUGH CASHWRAP ACCESS CHASE FOR EACH CASHWRAP SECTION. ROUTE FROM JUNCTION BOX AT CONDUIT STUB UP DAISY-CHAINING TO THE FARTHEST RECEPTACLE.

44 PROVIDE (2) PULL BOXES IN CASHWRAP MOUNTED AT 6" AFF FOR DATA. COORDINATE FINAL LOCATION WITH OWNER AND CABINETRY PROVIDER PRIOR TO ROUGH-IN. REFER TO DETAIL 7 ON SHEET E3.3 FOR ADDITIONAL INFORMATION. ALL 1" FLEX CONDUITS TO EACH DATA OUTLET TO BE ROUTED FROM THE TOP OF THE PULL BOXES.

45 ROUTE (2) 1-1/2" POWER AND (2) 2" DATA CONDUIT FROM CASHWRAP WALL INTO JUNCTION BOXES AT STRUCTURE ABOVE. REFER TO DETAIL 7 ON SHEET E3.3 FOR JUNCTION BOX LOCATIONS AND ADDITIONAL INFORMATION.

46 ROUTE (2) 2-1/2" CONDUITS FOR DATA CABLING WITH BUSHINGS OVERHEAD TO THE TELEPHONE BACKBOARD IN A/V ROOM. MOUNT TIGHT TO BOTTOM OF ROOF STRUCTURE AND PARALLEL/PERPENDICULAR TO BUILDING LINES. PROVIDE PULLBOX FOR EVERY 100' OF LENGTH OR 180 DEGREES OF CONDUIT BENDS. BUNDLE CABLES LIKE TYPE FOR CONTINUATION TO A/V ROOM. CABLES SHALL BE BUNDLED WITH VELCRO STRAPS. REFER TO DETAIL 3 ON THIS SHEET FOR ADDITIONAL INFORMATION. CONFIRM ALL REQUIREMENTS WITH NIKE IT PRIOR TO ROUGH-IN.

47 PROVIDE DEDICATED NEUTRAL TO EACH CIRCUIT.

48 ROUTE (1) 3/4" POWER AND (1) 1" DATA CONDUIT FROM FLOOR BOX TO NEAREST WALL OR COLUMN.

49 FLUSH 2-GANG FLOOR BOX AND MOUNTING PLATES FURNISHED BY LIGHTING VENDOR. PROVIDE (1) DUPLEX RECEPTACLE AND (1) DATA OUTLET IN FLOOR BOX. COORDINATE EXACT LOCATION WITH ARCHITECTURAL DRAWINGS PRIOR TO ROUGH-IN.

50 20 AMP DOUBLE DUPLEX RECEPTACLE FOR CASHWRAP REGISTER. PROVIDE 1" FLEXIBLE TYPE CONDUIT ROUTED THROUGH CASHWRAP ACCESS CHASE FOR EACH CASHWRAP SECTION. ROUTE FROM JUNCTION BOX AT CONDUIT STUB UP DAISY-CHAINING TO THE FARTHEST RECEPTACLE.

51 DATA OUTLET. PROVIDE 1" FLEXIBLE TYPE CONDUIT ROUTED THROUGH CASHWRAP ACCESS CHASE TO EACH DATA OUTLET. DAISY-CHAINING DATA CONDUIT IS NOT ALLOWED. REFER TO DETAIL 5 ON SHEET E3.3 FOR VOICE/DATA OUTLET CONFIGURATION.

52 PROVIDE POWER CONNECTION AND PUSH BUTTON FOR MOTORIZED WATER SUPPLY SHUTOFF VALVE. REFER TO PLUMBING DRAWINGS AND SPECIFICATIONS FOR ADDITIONAL INFORMATION.

53 LED TICKER. REFER TO DETAIL 10 ON SHEET E3.3 FOR ADDITIONAL INFORMATION. PROVIDE ALL COMPONENTS SHOWN UNLESS OTHERWISE NOTED. PAINT THE CONDUIT AND JUNCTION BOX TO MATCH CEILING OR ROOF STRUCTURE COLOR. COORDINATE FINAL LOCATION AND CONFIRM REQUIREMENTS WITH NIKE IT PRIOR TO ROUGH IN.

54 WINDOW LED TICKER. REFER TO DETAIL 9 ON SHEET E3.3 FOR ADDITIONAL INFORMATION. PROVIDE ALL COMPONENTS SHOWN UNLESS OTHERWISE NOTED. PAINT THE CONDUIT AND JUNCTION BOX TO MATCH CEILING OR ROOF STRUCTURE COLOR. COORDINATE FINAL LOCATION AND CONFIRM REQUIREMENTS WITH NIKE IT PRIOR TO ROUGH IN.

55 GRAPHIC PANEL. PROVIDE DUPLEX RECEPTACLE AND DATA OUTLET AT +34" AFF TO THE CENTER OF DEVICES. THE DEVICES SHALL BE LOCATED WITH THE MIDPOINT BETWEEN THE TWO DEVICES POSITIONED AT THE CENTERLINE OF THE AISLE, WITH 6" SEPARATION BETWEEN THE DUPLEX RECEPTACLE AND DATA OUTLET.

DATA CONDUITS SHALL NOT BE DAISY-CHAINED.

DRAWING USED FOR REFERENCE ONLY AND IS NOT TO BE SUBSTITUTED FOR CURRENT MEP DRAWING

Engineer:

Project Owner:

NIKE, Inc.
One Bowerman Drive
Beaverton, OR 97005
(503) 671-6453
www.nike.com

Project Address:

NIKE FACTORY STORE
WATERFORD LAKES SHOPPING CENTER
449 N. ALAFAYA TRAIL
ORLANDO, FL 32828

TEMPLATE ISSUE DATE: 11/28/2018

Fixture Package: UNITE

Stamp:

Issued For: PERMIT/BID

Issue Date: 11/06/2020

Revisions:

NO.	REASON	DATE

PROJECT MANAGER:
CHECKED BY:
DRAWN BY: Author

Project Number: 62301411

Sheet Title: ELECTRICAL POWER PLAN

Sheet Number: BAS-E2.0

DEAN W. CHANDLER

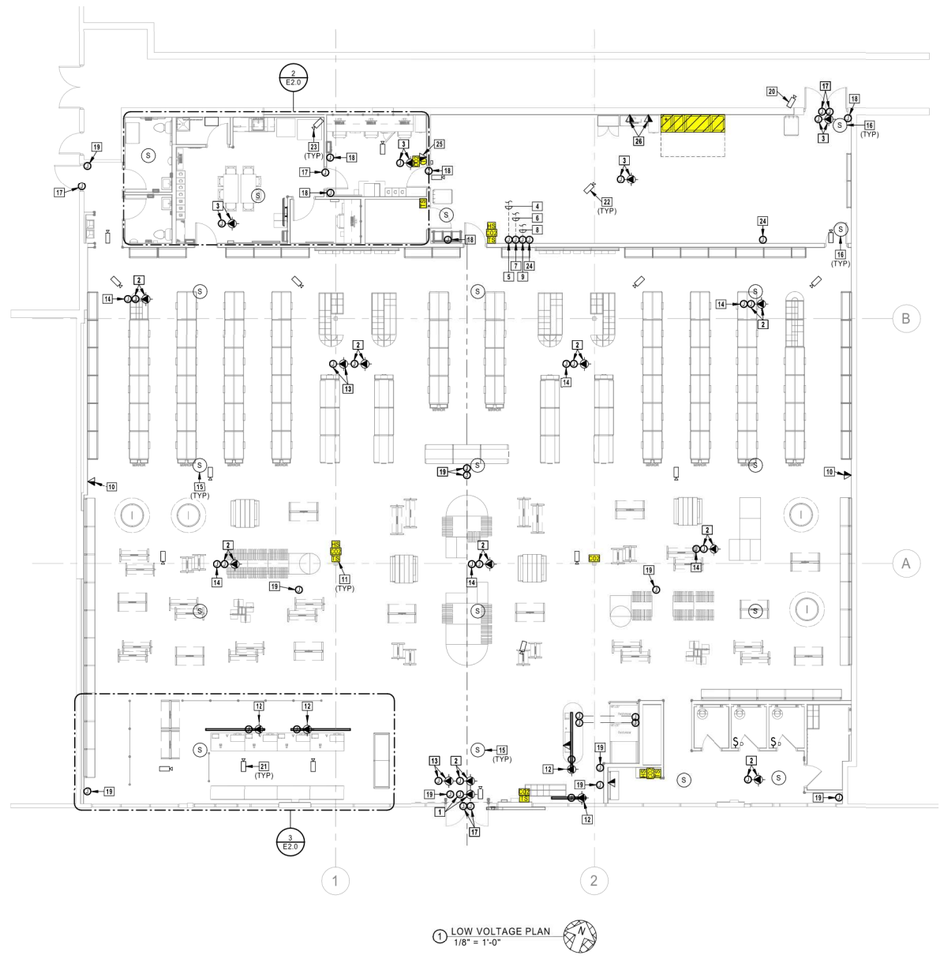

1 LOW VOLTAGE PLAN
1/8" = 1'-0"

ELECTRICAL LOW VOLTAGE GENERAL NOTES:

1. REFER TO SHEET E0.0 FOR ELECTRICAL GENERAL NOTES.
2. REFER TO SHEET E2.0 FOR CONDUIT REQUIREMENTS AND COORDINATION.
3. LOW VOLTAGE CONCUIT SHALL BE INSTALLED WITH NO MORE THAN 180 DEGREE TOTAL BENDS BETWEEN PULL POINTS.
4. LOCATE AND SET THERMOSTATS AND SENSORS AT LOCATIONS SHOWN ON PLANS. VERIFY EXACT LOCATIONS WITH ARCHITECT PRIOR TO INSTALLATION. INSTALL THERMOSTATS AND TEMPERATURE SENSORS WITH TOP OF DEVICE AT MAXIMUM 48" AFF TO MEET ADA REQUIREMENTS UNLESS NOTED OTHERWISE. CO2 SENSORS SHALL BE MOUNTED AT 54" AFF UNLESS NOTED OTHERWISE. HUMIDITY SENSORS SHALL BE BE MOUNTED BELOW TEMPERATURE SENSORS UNLESS NOTED OTHERWISE. PROVIDE INSULATED BACKING FOR THERMOSTATS MOUNTED ON EXTERIOR BUILDING WALLS.

☐ ELECTRICAL LOW VOLTAGE PLAN NOTES

1 TRAFFIC COUNTER. PROVIDE (1) 4-11/16" SQUARE JUNCTION AND (1) 4" SQUARE JUNCTION BOX MOUNTED AT STRUCTURE. JUNCTION BOXES SHALL BE CENTERED ON THE DOOR, 4' FROM THE ENTRANCE. PROVIDE MOUNTING ASSEMBLY FOR THE TRAFFIC COUNTER AND INSTALL ON THE 4" SQUARE JUNCTION BOX. PROVIDE SINGLE GANG MUD RING AND (2) TELE/DATA OUTLETS ON THE 4-11/16" SQUARE JUNCTION BOX. REFER TO DETAIL 2 ON SHEET E3.3 FOR ADDITIONAL INFORMATION. PROVIDE ALL COMPONENTS SHOWN UNLESS OTHERWISE NOTED. HOMERUN 1" CONDUIT AND PULL STRING FROM TELE/DATA OUTLETS TO TELEPHONE BOARD IN IT EQUIPMENT ROOM. CONDUIT SHALL NOT BE DAISY CHAINED OR LOOPED. PAINT THE TRAFFIC COUNTER CONDUIT AND JUNCTION BOX TO MATCH CEILING OR ROOF STRUCTURE COLOR.

2 WIRELESS ACCESS POINT(WAP), SALES AREA/STOCKROOM. PROVIDE ONE 4" X 4" X 2-1/8" AND ONE 4-11/16" X 4-11/16" X 2-1/8" JUNCTION BOXES MOUNTED AT STRUCTURE. PROVIDE WAP MOUNTING ASSEMBLY AND MOUNT ON 4" X 4" X 2-1/8" JUNCTION BOX. PROVIDE (2) TELE/DATA OUTLETS ON 4-11/16" X 4-11/16" X 2-1/8" JUNCTION BOX. REFER TO DETAIL 1 ON SHEET E3.3 FOR ADDITIONAL INFORMATION. PROVIDE ALL COMPONENTS SHOWN UNLESS OTHERWISE NOTED. HOMERUN 1" CONDUIT AND PULL STRING FROM TELE/DATA OUTLETS TO WAP CONSOLIDATION PULLBOX OR TO HEAD-END EQUIPMENT INSIDE IT EQUIPMENT ROOM, WHICHEVER IS CLOSER. CONDUIT SHALL NOT BE DAISY CHAINED OR LOOPED. PAINT THE WAP CONDUIT AND JUNCTION BOX TO MATCH CEILING OR ROOF STRUCTURE COLOR. WAP SHALL NOT BE MOUNTED WITHIN 1'-0" OF LIGHT FIXTURE.

3 WIRELESS ACCESS POINT(WAP), BACK OF HOUSE. PROVIDE ONE 4-11/16" X 4-11/16" X 2-1/8" JUNCTION BOX WITH (2) TELE/DATA OUTLETS. PROVIDE WAP MOUNTING ASSEMBLY AND MOUNT BELOW ACCESSIBLE CEILING. REFER TO DETAIL 1 ON SHEET E3.3 FOR ADDITIONAL INFORMATION. PROVIDE ALL COMPONENTS SHOWN OTHERWISE NOTED. HOMERUN 1" CONDUIT AND PULL STRING FROM TELE/DATA OUTLETS TO WAP CONSOLIDATION PULLBOX ORTO HEAD-END EQUIPMENT INSIDE IT EQUIPMENT ROOM, WHICH EVER IS CLOSER. CONDUIT SHALL NOT BE DAISY CHAINED OR LOOPED. WAP SHALL NOT BE MOUNTED WITHIN 1'-0" OF LIGHT FIXTURE.

4 ROUTE (1) 2-1/2" CONDUIT FOR SECURITY/SURVEILLANCE CABLING WITH BUSHINGS OVERHEAD FROM PULLBOX TO SECURITY SYSTEM HEAD-END EQUIPMENT INSIDE IT EQUIPMENT ROOM. PROVIDE PULLBOX FOR EVERY 100' OF LENGTH OR 180 DEGREES OF CONDUIT BENDS. COORDINATE CONDUIT ROUTING WITH SECURITY VENDOR, AMERLUX LIGHTING AND DUCTWORK PRIOR TO ROUGH-IN.

5 PROVIDE 12"X12"X4" P.ULLBOX FOR SECURITY/SURVEILLANCE CABLING. PROVIDE GROMMETTED OPENINGS AS NECESSARY TO TRANSITION INDIVIDUAL CABLES INTO PULLBOX. MOUNT PULLBOX AT STRUCTURE UNLESS NOTED OTHERWISE. COORDINATE FINAL LOCATION WITH SECURITY VENDOR, AMERLUX LIGHTING AND DUCTWORK PRIOR TO ROUGH-IN.

6 ROUTE (1) 2" CONDUIT FOR AUDIO SYSTEM CABLING WITH BUSHINGS OVERHEAD FROM PULLBOX TO AUDIO SYSTEM HEAD END EQUIPMENT INSIDE IT EQUIPMENT ROOM. PROVIDE PULLBOX FOR EVERY 100' OF LENGTH OR 180 DEGREES OF CONDUIT BENDS. COORDINATE CONDUIT ROUTING WITH AUDIO SYSTEM VENDOR, LIGHTING AND DUCTWORK PRIOR TO ROUGH-IN.

7 PROVIDE 12"X12"X4" P.ULLBOX FOR AUDIO SYSTEM CABLING. PROVIDE GROMMETTED OPENINGS AS NECESSARY TO TRANSITION INDIVIDUAL CABLES INTO PULLBOX. MOUNT PULLBOX AT STRUCTURE UNLESS NOTED OTHERWISE. COORDINATE FINAL LOCATION WITH AUDIO SYSTEM VENDOR, AMERLUX LIGHTING AND DUCTWORK PRIOR TO ROUGH-IN.

8 ROUTE (1) 2" CONDUIT FOR WAP CABLING WITH BUSHING OVERHEAD FROM PULLBOX TO IT HEAD END EQUIPMENT IN IT EQUIPMENT ROOM. PROVIDE PULLBOX FOR EVERY 100' OF LENGTH OR 180 DEGREES OF CONDUIT BENDS. COORDINATE CONDUIT ROUTING WITH NIKE IT, LIGHTING AND DUCTWORK PRIOR TO ROUGH-IN.

9 PROVIDE 12"X12"X4" P.ULLBOX FOR WIRELESS ACCESS POINTS. PROVIDE GROMMETTED OPENINGS AS NECESSARY TO TRANSITION INDIVIDUAL CABLES INTO PULLBOX. MOUNT PULLBOX AT STRUCTURE UNLESS NOTED OTHERWISE. COORDINATE FINAL LOCATION WITH NIKE IT, AUDIO SYSTEM VENDOR, AMERLUX LIGHTING AND DUCTWORK PRIOR TO ROUGH-IN.

10 GRAPHIC PANEL. PROVIDE 1" CONDUIT AND PULL STRING FROM TELE/DATA OUTLETS TO TELEPHONE BOARD IN IT EQUIPMENT ROOM. REFER TO DETAIL 1 ON SHEET E2.0 FOR ADDITIONAL INFORMATION.

11 HVAC SENSOR. PROVIDE 3/4" CONDUIT FROM HVAC SENSOR TO HVAC EQUIPMENT AND EMS CONTROL PANEL AS REQUIRED. STACK SENSORS VERTICALLY TO CONSERVE WALL/COLUMN SPACE. PROVIDE SINGLE GANG WEATHER PROOF BELL BOX FOR ALL SURFACE MOUNTED SENSORS. CONFIRM FINAL REQUIREMENTS, MOUNTING, LOCATIONS, QUANTITIES, AND CONDUIT ROUTING WITH MECHANICAL CONTRACTOR AND EMS VENDOR PRIOR TO ROUGH-IN.

12 LED TICKER. PROVIDE (2) 1" CONDUITS WITH PULL WIRE FROM IT EQUIPMENT ROOM TO LED TICKER. REFER TO DETAIL 10 ON SHEET E3.3 FOR ADDITIONAL INFORMATION. PROVIDE ALL COMPONENTS SHOWN UNLESS OTHERWISE NOTED. PAINT THE CONDUIT AND JUNCTION BOX TO MATCH CEILING OR ROOF STRUCTURE COLOR.

13 HEAD END BEACON. PROVIDE 1" CONDUIT WITH PULL WIRE FROM IT EQUIPMENT ROOM TO JUNCTION BOX FOR DATA MOUNTED AT STRUCTURE. REFER TO DETAIL 11 ON SHEET E3.3 FOR ADDITIONAL INFORMATION. PROVIDE ALL COMPONENTS SHOWN UNLESS OTHERWISE NOTED. PAINT THE CONDUIT AND JUNCTION BOX TO MATCH CEILING OR ROOF STRUCTURE COLOR.

14 BEACON. REFER TO DETAIL 11 ON SHEET E3.3 FOR ADDITIONAL INFORMATION. PROVIDE ALL COMPONENTS SHOWN UNLESS OTHERWISE NOTED. PAINT THE CONDUIT AND JUNCTION BOX TO MATCH CEILING OR ROOF STRUCTURE COLOR.

15 AUDIO SYSTEM SPEAKER, SALES AREA. PROVIDE JUNCTION BOX AND 3/4" CONDUIT WITH PULL WIRE BETWEEN SPEAKERS. ROUTE CONDUIT TO IT EQUIPMENT ROOM. COORDINATE FINAL SPEAKER QUANTITIES, LOCATIONS, AND REQUIREMENTS WITH AUDIO SYSTEM VENDOR DRAWINGS PRIOR TO ROUGH-IN.

16 AUDIO SYSTEM SPEAKER, BACK OF HOUSE/STOCKROOM. PROVIDE 3/4" CONDUIT LOOP WITH PULL WIRE BETWEEN SPEAKERS IN BACK OF HOUSE AREAS TO IT EQUIPMENT ROOM. COORDINATE FINAL SPEAKER QUANTITIES, LOCATIONS, AND REQUIREMENTS WITH AUDIO SYSTEM VENDOR DRAWINGS PRIOR TO ROUGH-IN.

17 DOOR CONTACT. PROVIDE 2-GANG BOX MOUNTED TO STRUCTURE AND 3/4" CONDUIT WITH PULL STRING ROUTED TO IT EQUIPMENT ROOM. ROUTE CONDUIT THOUGH DOOR FRAME FROM TOP OF DOOR HEADER TO DOOR CONTACT DEVICE. REFER TO DETAIL 8 ON SHEET E3.3 FOR ADDITIONAL INFORMATION. COORDINATE CONDUIT ROUTING WITH NIKE PROJECT MANAGER AND SECURITY CONTRACTOR PRIOR TO ROUGH-IN.

18 SECURITY DEVICE, BACK OF HOUSE/STOCKROOM. PROVIDE 2-GANG BOX WITH SINGLE GANG MUD RING AND CONSOLIDATE ALL DEVICES TO (1) 1" CONDUIT WITH PULL STRING ROUTED TO SECURITY SYSTEM HEAD-END EQUIPMENT INSIDE IT EQUIPMENT ROOM.

19 SECURITY DEVICE, SALES AREA. PROVIDE 2-GANG BOX WITH SINGLE GANG MUD RING AND 3/4" CONDUIT WITH PULL STRING ROUTED TO NEAREST SECURITY CONSOLIDATION PULLBOX.

20 EXTERIOR SURVEILLANCE CAMERA. PROVIDE WEATHERPROOF 2-GANG BOX WITH SINGLE GANG MUD RING MOUNTED AT 10'-0" AFF AND 3/4" CONDUIT WITH PULL-STRING ROUTED TO TO SECURITY SYSTEM HEAD-END EQUIPMENT INSIDE IT EQUIPMENT ROOM AND 3/4" CONDUIT WITH PULL-STRING FROM CAMERA TO SECURITY MONITOR MOUNTED 12" ABOVE DOOR FRAME INSIDE STOCKROOM. SEAL WALL PENETRATION PER SPECIFICATIONS. COORDINATE FINAL LOCATION, REQUIREMENTS, AND JUNCTION BOX SIZE WITH SECURITY SYSTEM VENDOR PRIOR TO ROUGH-IN.

21 SURVEILLANCE CAMERA, SALES AREA. PENDANT MOUNT 2-GANG BOX AT SAME HEIGHT AS AMERLUX WITH ROUND MUD RING AND 3/4" CONDUIT ROUTED TO NEAREST SECURITY CONSOLIDATION PULLBOX.

22 SURVEILLANCE CAMERA, STOCKROOM. PROVIDE 2-GANG BOX MOUNTED TO STRUCTURE AND 3/4" CONDUIT WITH PULL STRING ROUTED TO SALES AREA SECURITY CONSOLIDATION PULLBOX OR TO SECURITY SYSTEM HEAD-END EQUIPMENT INSIDE IT EQUIPMENT ROOM, WHICHEVER IS CLOSER.

23 SURVEILLANCE CAMERA, BACK OF HOUSE CEILING. PROVIDE 2-GANG BOX WITH ROUND MUD RING AND 3/4" CONDUIT WITH PULL STRING ROUTED TO SECURITY SYSTEM HEAD-END EQUIPMENT INSIDE IT EQUIPMENT ROOM.

24 PROVIDE GROUNDING PLATE AND GROUND CONNECTION SET BY SHIELDING PAINT MANUFACTURER IN ACCESSIBLE LOCATION. PROVIDE A #12 AWG SHIELDED GROUND IN 1/2" CONDUIT PER THE SPECIFICATIONS TO GROUND BAR LOCATED IN THE IT EQUIP ROOM. PROVIDE A #12 GREEN GROUNDING CONDUCTOR TO THE NEAREST GROUND.

25 AUDIO SYSTEM TOUCHSCREEN CONTROLS. ALIGN WITH LIGHT SWITCHES. LIGHT SWITCHES HAVE PRIORITY NEAR DOOR. PROVIDE DUAL-GANG BOX WITH SINGLE GANG MUD RING MOUNTED AT 48" AFF AND 1" CONDUIT FOR DATA ROUTED TO IT EQUIPMENT ROOM. COORDINATE FINAL REQUIREMENTS WITH AUDIO SYSTEM VENDOR PRIOR TO ROUGH-IN.

26 DATA OUTLET, LOCATED WITHIN 10" OF RECEPTACLE. PROVIDE SQUARE 4-11/16" X 4-11/16" X 2-1/2" JUNCTION BOX WITH SINGLE GANG MUD RING MOUNTED AT 15" AFF UNLESS NOTED OTHERWISE. PROVIDE 1" CONDUIT FOR (1) DATA AND (1) VOICE CABLES ROUTED TO IT EQUIPMENT ROOM. REFER TO DETAIL 3 ON SHEET E3.3 FOR VOICE/DATA OUTLET CONFIGURATION.

DATA CONDUITS SHALL NOT BE DAISY-CHAINED.

DRAWING USED FOR REFERENCE ONLY AND IS NOT TO BE SUBSTITUTED FOR CURRENT MEP DRAWING

Engineer:

Project Owner:

NIKE, Inc.
One Bowerman Drive
Beaverton, OR 97005
(503) 671-6453
www.nike.com

Project Address:

NIKE FACTORY STORE
WATERFORD LAKES SHOPPING CENTER
449 N. ALAFAYA TRAIL
ORLANDO, FL 32828
TEMPLATE ISSUE DATE: 11/26/2018

Fixture Package:

UNITE

Stamp:

Issued For:

PERMIT/BID

Issue Date:

11/06/2020

Revisions:

NO.	REASON	DATE

PROJECT MANAGER:
KH
CHECKED BY:
DRAWN BY:
Author

Project Number:

62301411

Sheet Title:

ELECTRICAL LOW VOLTAGE PLAN

Sheet Number:

BAS-E2.1

DEAN W. CHANDLER

CIRCUIT SCHEDULE:

ALL CONDUCTOR SIZES ARE BASED ON 75 DEG C RATED TERMINATION AND COPPER CONDUCTORS WITH TYPE THHN/THWN-2 INSULATION. WHERE ALUMINUM CONDUCTORS ARE ALLOWED PER SPECIFICATIONS AND FOR TERMINATION OR INSULATION TYPES RATED LESS THAN 75 DEG C, MODIFY SIZES ACCORDING TO NFPA 70.

FEEDER TAG	FEEDER DESCRIPTION
123	(3)#1, (1)#6G, 1-1/2" C
404A	(4)-500kcmil, (1)#3G, 3-1/2" C
D1	EMS CABLING PROVIDED WITH IFS SYSTEM
E404A	EXISTING (4)-500kcmil, (1)#3G, 3-1/2" C
ES404	EXISTING (4)-500kcmil, 3-1/2"C
G300	#2 COPPER GROUND, 3/4" C
G500	#1/0 COPPER GROUND, 3/4" C
T154	(4)#1/0, (1)#6G 2" C
TG000	#3/0 cu

TENANT LOAD SUMMARY (MDP)

TENANT OCCUPANCY TYPE: STORE TENANT SQUARE FOOTAGE: 11120		SERVICE DESCRIPTION: 480Y/277 V	
LOAD TYPE	CONNECTED LOAD	DEMAND FACTOR	NEC DEMAND
EXISTING LOAD (E)	0 VA	100%	0 VA
COOLING (C)	67634 VA	100%	67634 VA
HEATING (H)	0 VA	0%	0 VA
LIGHTING (L) (PER NEC-220)	29248 VA	125%	36559 VA
RECEPTACLES (R)	31040 VA	66%	20520 VA
MOTORS (M)	22007 VA	100%	22007 VA
SUPPLEMENTAL HEAT (U)	2000 VA	100%	2000 VA
MISC EQUIP (Z)	3760 VA	100%	3760 VA
REFRIGERATION (F)	0 VA	100%	0 VA
SIGN/DISPLAY (D)	1200 VA	125%	1500 VA
KITCHEN (K)	0 VA	100%	0 VA
LARGEST MOTOR	10018 VA	125%	12523 VA
SHOW WINDOW (W)	0 VA	125%	0 VA
TRACK LIGHTING	6900 VA	100%	6900 VA
TOTAL LOAD	173807	VA	173403
TOTAL AMPACITY	209	AMPS	209
SERVICE AMPACITY		AMPS	400
SPARE CAPACITY		AMPS	191

FEEDER LENGTH BETWEEN TENANT DISCONNECT AND IFS EQUIPMENT IS APPROXIMATELY 75 FEET. CONTRACTOR TO FIELD VERIFY EXACT DISTANCE AND NOTIFY ENGINEER OF ANY CHANGES.

FINAL ELECTRICAL CONNECTION TO BE PERFORMED BY THE LANDLORD'S ELECTRICIAN AT THE TENANT'S EXPENSE.

UTILITY COMPANY: OUC
CONTACT: CUSTOMER SERVICE
PHONE NUMBER: 407.423.9018

FAULT CURRENT INFORMATION HAS NOT BEEN MADE AVAILABLE TO HENDERSON ENGINEERS, INC AT THIS TIME. FAULT CURRENT CALCULATIONS ARE BASED ON AN APPROXIMATE UTILITY TRANSFORMER SIZE OF 1000KVA, 5.0%Z, AND INFINITE PRIMARY. 24,085 AMPS CA AT THE LANDLORDS DISTRIBUTION EQUIPMENT. CONTRACTOR TO FIELD VERIFY FCA AT LOCATION 'F1' INDICATED AND REPORT FINDINGS TO ENGINEER.

NOTE:
ALL SURGE SUPPRESSION EQUIPMENT SHALL BE PURCHASED FROM 'SURGE SUPPRESSION INCORPORATED' ONLY. CONTACT WILL BANKER AT (352)799-6986 OR WBANKER@SURGESUPPRESSION.COM FOR ORDERING AND OTHER INFORMATION.

ALL EMS EQUIPMENT SHALL BE PURCHASED FROM 'COMFORT SYSTEMS USA' ONLY. CONTACT PAUL SAWYER AT (317)246-5170 OR PAUL.SAWYER@COMFORTSYSTEMSUSA.COM FOR ORDERING AND ADDITIONAL INFORMATION.

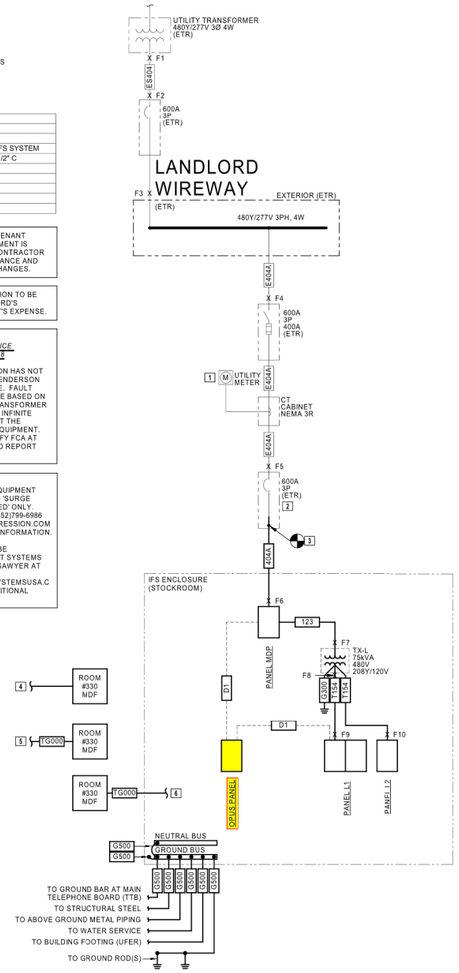

GENERAL ONE-LINE NOTES:

1. INFORMATION SHOWN ON TENANT DRAWINGS IS INTENDED TO INDICATE MINIMUM REQUIREMENTS TO MEET THE NEEDS OF THE TENANT. VERIFY EXISTING CONDITIONS, CAPACITIES, AND OTHER PROVISIONS BY OTHERS PER TENANT LEASE AGREEMENT PRIOR TO BEGINNING CONSTRUCTION.
2. OBTAIN A COPY AND REVIEW LANDLORD'S LATEST EDITION OF THEIR TENANT DESIGN AND CONSTRUCTION CRITERIA AND COMPLY WITH ALL REQUIREMENTS. WHERE CONFLICTS OCCUR BETWEEN THE CRITERIA DOCUMENTS AND THE CONSTRUCTION DOCUMENTS, THE MOST STRINGENT REQUIREMENT WILL GOVERN.
3. ALL CONDUCTOR LENGTHS PROVIDED IN THESE DESIGN DOCUMENTS ARE INTENDED SOLELY FOR USE IN THE DESIGN CALCULATIONS BY THE DESIGN PROFESSIONAL UNLESS SPECIFICALLY NOTED OTHERWISE IN THE DOCUMENTS. THEY SHALL NOT BE USED BY CONTRACTORS IN BIDDING OR CONSTRUCTING THE PROJECT. THE CONTRACTOR IS SOLELY RESPONSIBLE FOR THE MATERIAL QUANTITIES REQUIRED TO BID AND CONSTRUCT THE COMPLETE PROJECT.
4. PROVIDE COMPLETE TYPEWRITTEN IDENTIFICATION DIRECTORY CARD FOR ALL MAIN AND BRANCH CIRCUITS IN THE PANELBOARD DOORS.
5. "EXISTING" CONDITIONS SHOWN REFLECT INFORMATION PROVIDED BY THE LANDLORD.
6. ALL NEW WORK SHALL BE COORDINATED WITH LANDLORD AND SHALL BE IN ACCORDANCE WITH LANDLORD'S REQUIREMENTS.
7. THE USE OF 'BX', 'ROMEX', OR 'AC' IS NOT PERMITTED.
8. 'F#' REPRESENTS FAULT POINT F# AS CALCULATED IN TABLE BELOW.

ONE-LINE NOTES:

1. EXISTING UTILITY METER INSTALLED IN METER SOCKET TO REMAIN. LANDLORD TO COORDINATE EXISTING METER NUMBER WITH UTILITY COMPANY UPON TRANSFER.
2. CONTRACTOR TO VERIFY THIS IS POINT OF SERVICE ENTRANCE AND NEUTRAL AND GROUND ARE BONDED TOGETHER AND TO THE GROUNDING ELECTRODE SYSTEM.
3. DEMOLISH EXISTING PANELBOARDS AND EXTEND EXISTING CONDUIT AND CONDUCTORS TO IFS GEAR. FIELD VERIFY CONDUIT SIZE MATCHES CONDUIT SIZE INDICATED. COORDINATE ALL REQUIREMENTS WITH LANDLORD PRIOR TO ROUGH-IN. REPORT ANY DISCREPANCIES TO THE ARCHITECT AND ENGINEER.
4. PROVIDE EMPTY 2" CONDUIT FROM BUILDING TELEPHONE RISER CLOSET TO IT/AV RACK. FIELD VERIFY EXACT ROUTE FOR INSTALLATION OF ELECTRICAL AND TELEPHONE SERVICES PRIOR TO BID.
5. PROVIDE GROUNDING CONDUCTOR FROM EXISTING BUILDING TELEPHONE GROUNDING SYSTEM TO NEW TELEPHONE BACKBOARD IN AV ROOM.
6. PROVIDE GROUNDING CONDUCTOR FROM GROUND BAR IN A/V/IT ROOM TO MAIN GROUND BAR IN IFS EQUIPMENT.

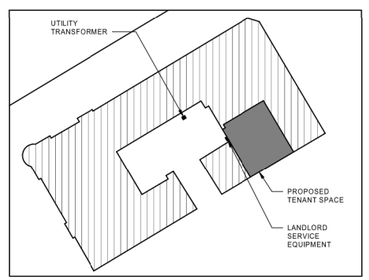

3 ELECTRICAL SITE KEY PLAN
NTS

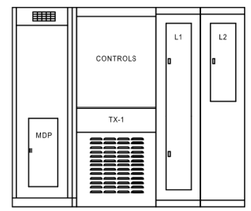

2 IFS ELEVATIONS
NTS

1 ELECTRICAL ONELINE
NTS

Short-Circuit and Voltage Drop Calculations

Distances are for calculation purposes only and shall not be used for contractor takeoffs nor bidding - Contractor shall notify Engineer of any field condition that results in a change of 10% or greater circuit distance

The...
ISC (2) = ISC(1) x M(1)
ISC (1) = short circuit current at fault point 1
ISC (2) = short circuit current at fault point 2

M= 1/(1+f)

Feeder: f (3Ø) = 1.732 x L x Isc / C x E
Feeder: f (1Ø)= 2 x L x Isc / C x E

XFMR: f (3Ø) = IP(sca)x Vp x 1.73 x %Z / 100,000 x KVA
XFMR: f (1Ø)= IP(sca)x Vp x %Z / 100,000 x KVA

IS(sca)= Vp x M x IP(sca) / Vs

IP = Primary short circuit current
Vp = Primary voltage
IS= Secondary short circuit current
Vs= Secondary votage
L = Length of circuit
C = "C" Factor from Bussman table where "C" = 1 / impedance per linear foot
E = Line to line volts

Feeder Types =
NM - Non Magnetic Conduit, M - Magnetic Conduit, FB - Feeder Busway, PB - Plug-in Busway, TX - Transformer

VOLTAGE DROP (3Ø):
%VD= ((R x cos(arccos(pf)) + X x sin (arccos(pf))) x L/# x I x 1.73) / E
VOLTAGE DROP (1Ø):
%VD= ((R x cos(arccos(pf)) + X x sin(arccos(pf))) x 2 x L/# x I) / E

%VD CUM= Cumulative Voltage Drop from Fault Point 1 to Fault Point #
R= resistance in ohms per LF
X= reactances in ohms per LF

Date of Calculations: 11/06/2020
System Voltage: 480Y/277V - 3 phase

Fault Point (F#)	Bus/Feeder Description	Source (Fault Point)	Phase	Source Isc (amps)	Feeder: Conduit Type/ TX	Feeder: Material	Feeder: Quantity of Parallel Sets and Bus/ Phase & Neutral Size	Feeder: Conductor Value	Feeder: Busway 'C' Value	L-L Voltage (E)	Circuit Length (L)	Load Power Factor (pf)	Circuit Load (Ampserage)	Conductor: Resistance (R)	Conductor: Reactance (X)	Conductor: Arccos (pf) (Radians)	Transformer: Type	Transformer: Degree Rise	Transformer: kVA	Transformer: New Xfmr Z	Transformer: Existing Xfmr Z	Transformer: Secondary Voltage	Transformer: Tap Setting	f	M	Fault Current (amps)	Voltage Drop (%VD)	Cumulative Voltage Drop (%VD)	Fault Point (F#)
1	Utility Service Point			24,085 at the secondary of the utility transformer																			Source Isc + 6X Motor Contribution =			24805			1
	Motor Contribution			120 The connected full load motor amps (includes compressors) on the system																									
2	To Landlord Main Disconnect Switch	1	3	24805	M	CU	1 Set(s) of 500 kcmil	22185	--	480	25	0.9	480	0.000029	0.000048	0.451027								0.101	0.91	22532	-0.20%	-0.20%	2
3	To Landlord Wireway	2	3	22532	M	CU	1 Set(s) of 500 kcmil	22185	--	480	120	0.9	480	0.000029	0.000048	0.451027								0.440	0.69	15650	-0.98%	-1.18%	3
4	To Service Disconnect	3	3	15650	M	CU	1 Set(s) of 500 kcmil	22185	--	480	5	0.9	320	0.000029	0.000048	0.451027								0.013	0.99	15453	-0.03%	-1.21%	4
5	To Tenant Disconnect	4	3	15453	M	CU	1 Set(s) of 500 kcmil	22185	--	480	5	0.9	320	0.000029	0.000048	0.451027								0.013	0.99	15261	-0.03%	-1.24%	5
6	To Panel 'MDP'	5	3	15261	M	CU	1 Set(s) of 500 kcmil	22185	--	480	75	0.9	320	0.000029	0.000048	0.451027								0.186	0.84	12866	-0.41%	-1.64%	6
7	To Transformer 'TX-L'	6	3	12866	M	CU	1 Set(s) of 1	7293	--	480	5	0.9	320	0.000160	0.000057	0.451027								0.032	0.97	12469	-0.10%	-1.74%	7
8	Transformer 'TX-L'	7	3	12469	TX					480							DOE	150	75	4.05		208		5.598	0.15	4361		-1.74%	8
9	To Panel 'L1'	8	3	4361	M	CU	1 Set(s) of 1/0 AWG	8925	--	208	5	0.9	120	0.000120	0.000055	0.451027								0.020	0.98	4274	-0.07%	-1.81%	9
10	To Panel 'L2'	8	3	4361	M	CU	1 Set(s) of 1/0 AWG	8925	--	208	5	0.9	120	0.000120	0.000055	0.451027								0.020	0.98	4274	-0.07%	-1.81%	10
11	RTU-1	6	3	12866	M	CU	1 Set(s) of 12 AWG	617	--	480	120	0.85	10	0.002000	0.000068	0.554811								9.029	0.10	1283	-0.75%	-2.39%	11
12	RTU-2	6	3	12866	M	CU	1 Set(s) of 12 AWG	617	--	480	75	0.85	11	0.002000	0.000068	0.554811								5.643	0.15	1937	-0.52%	-2.16%	12
13	RTU-3	6	3	12866	M	CU	1 Set(s) of 8 AWG	1557	--	480	125	0.85	40.1	0.000780	0.000065	0.554811								3.727	0.21	2722	-1.26%	-2.90%	13
14	RTU-4	6	3	12866	M	CU	1 Set(s) of 8 AWG	1557	--	480	60	0.85	29	0.000780	0.000065	0.554811								1.789	0.36	4613	-0.44%	-2.08%	14
15	RTU-5	6	3	12866	M	CU	1 Set(s) of 10	981	--	480	105	0.85	28	0.001200	0.000063	0.554811								4.969	0.17	2155	-1.12%	-2.76%	15

DRAWING USED FOR REFERENCE ONLY AND IS NOT TO BE SUBSTITUTED FOR CURRENT MEP DRAWING

Engineer:

Project Owner:

NIKE, Inc.
One Bowerman Drive
Beaverton, OR 97005
(503) 671-6453
www.nike.com

Project Address:

NIKE FACTORY STORE
WATERFORD LAKES SHOPPING CENTER
449 N. ALAFAYA TRAIL
ORLANDO, FL 32828
TEMPLATE ISSUE DATE: 11/20/2018

Fixture Package:
UNITE

Stamp:

Issued For:
PERMIT/BID

Issue Date:
11/06/2020

Revisions:

NO.	REASON	DATE

PROJECT MANAGER: KH
CHECKED BY:
DRAWN BY: Author

Project Number:
62301411

Sheet Title:
ELECTRICAL ONE-LINE DIAGRAM AND SCHEDULES

Sheet Number:
BAS-E3.0

DEAN W. CHANDLER

PANELBOARD ABBREVIATION LEGEND

MF - WIRED BY IFS MANUFACTURER
SR - BREAKERS SHALL BE SERIES RATED WITH PANELBOARD 'H' BRANCH CIRCUIT BREAKERS
EM - EMERGENCY LIGHTING
HT# - PROVIDE HANDLE-TIE FOR BREAKERS SHARING NEUTRALS
Z# - LIGHTING CONTROL ZONE. REFER TO LIGHTING ZONE CONTROL SCHEDULE ON SHEET E3.2
TB - CIRCUIT TERMINATED ON TERMINAL BLOCK. REFER TO DETAIL 4 ON SHEET E3.2
GF - GFCI TYPE CIRCUIT BREAKER
LCK - HANDLE PADLOCKABLE-OFF DEVICE
FA - RED / HANDLE-ON CLAMP
VD - WIRE UPSIZED FOR VOLTAGE DROP

PANELBOARD: MDP (NEW)

BUS AMPS: 400A
MAIN SIZE/TYPE: 400A M.C.B.
VOLTS/PHASE: 480Y/277 V 3P/4W
SUPPLIED BY: UTILITY

STORE
TENANT SQUARE FOOTAGE: 11120

FAULT CURRENT: 12,866A
AIC RATED: FULLY RATED
AIC RATING: FCA +10% MINIMUM
SERVES: NIKE STORE
MOUNTING: SURFACE
LOCATION: IFS (STOCKROOM)

EQUIPMENT GROUND BUS
SERVICE ENTRANCE RATED
LINE-SIDE LUGS: MECHANICAL

CKT NO.	DESCRIPTION	LOAD TYPE	NOTES	WIRE SIZE	BKR AMP	P	PHASE A		PHASE B		PHASE C		P	BKR AMP	WIRE SIZE	NOTES	LOAD TYPE	DESCRIPTION	CKT NO.
1							19126	0											2
3	TX-L	--		OL	125	3			20660	0			3	30				SURGE SUPPRESSOR	4
5											18523	0							6
7							2771	8037											8
9	RTU-1	C M		12	15	3			2771	8037			3	35	8		C M	RTU-4	10
11											2771	8037							12
13							3048	7760											14
15	RTU-2	C M		12	15	3			3048	7760			3	30	10		C M	RTU-5	16
17											3048	7760							18
19							11113	1000					2	20	12		U	WH	20
21	RTU-3	C M		8	50	3			11113	1000									22
23											11113	0	1					EQUIPPED SPACE	24
25	EQUIPPED SPACE					1	0	0					1					EQUIPPED SPACE	26
27	EQUIPPED SPACE					1			0	0			1					EQUIPPED SPACE	28
29	EQUIPPED SPACE					1					0	0	1					EQUIPPED SPACE	30
31	EQUIPPED SPACE					1	0	0					1					EQUIPPED SPACE	32
33	EQUIPPED SPACE					1			0	0			1					EQUIPPED SPACE	34
35	EQUIPPED SPACE					1					0	0	1					EQUIPPED SPACE	36
37							0	0					1					EQUIPPED SPACE	38
39	KW METER				20	3			0	0			1					EQUIPPED SPACE	40
41											0	0	1					EQUIPPED SPACE	42
							TOTAL LOAD (VA):		52855 VA		54389 VA		51252 VA						
							TOTAL AMPS:		192 A		197 A		185 A						

LOAD TYPE	CONNECTED LOAD	DEMAND FACTOR	NEC DEMAND
EXISTING LOAD (E)	0 VA	100%	0 VA
COOLING (C)	67634 VA	100%	67634 VA
HEATING (H)	0 VA	0%	0 VA
LIGHTING (L) (PER NEC-220)	29248 VA	125%	36559 VA
RECEPTACLES (R)	31040 VA	66%	20520 VA
MOTORS (M)	22007 VA	100%	22007 VA
SUPPLEMENTAL HEAT (U)	2000 VA	100%	2000 VA
MISC EQUIP (Z)	3760 VA	100%	3760 VA
REFRIGERATION (F)	0 VA	100%	0 VA
SIGN/DISPLAY (D)	1200 VA	125%	1500 VA
KITCHEN (K)	0 VA	100%	0 VA
LARGEST MOTOR	10018 VA	125%	12523 VA
SHOW WINDOW (W)	0 VA	125%	0 VA
TRACK LIGHTING	6900 VA	100%	6900 VA

PANELBOARD NOTES

PANELBOARD TOTALS	
TOTAL CONNECTED LOAD	173807 VA
TOTAL NEC LOAD	173403 VA
TOTAL CONNECTED CURRENT	209 A
TOTAL NEC DEMAND CURRENT	209 A

PANELBOARD: L1 (NEW)

BUS AMPS: 150A
MAIN SIZE/TYPE: 150A M.C.B.
VOLTS/PHASE: 208Y/120 V 3P/4W
SUPPLIED BY: MDP VIA TX-L

FAULT CURRENT: 4,274A
AIC RATED: FULLY RATED
AIC RATING: FCA +10% MINIMUM
SERVES: NIKE STORE
MOUNTING: SURFACE
LOCATION: IFS (STOCKROOM)

EQUIPMENT GROUND BUS
LINE-SIDE LUGS: MECHANICAL

CKT NO.	DESCRIPTION	LOAD TYPE	NOTES	WIRE SIZE	BKR AMP	P	PHASE A		PHASE B		PHASE C		P	BKR AMP	WIRE SIZE	NOTES	LOAD TYPE	DESCRIPTION	CKT NO.
1	RCPT - E GRAPHICS	R		12	20	1	180	0											2
3	RCPT - W GRAPHICS	R		12	20	1			180	0			3	30				SURGE SUPPRESSOR	4
5	RCPT - E APPAREL WALL	R		12	20	1					720	0							6
7	RCPT - W APPAREL WALL	R		12	20	1	720	300					1	20	10		R	RCPT - IT TICKER 1	8
9	RCPT - FOOTWEAR E	R		12	20	1			720	300			1	20	10		R	RCPT - IT TICKER 2	10
11	RCPT - FOOTWEAR W	R		12	20	1					720	300	1	20	10		R	RCPT - IT TICKER 3	12
13	RCPT - SALES COLUMNS	R		12	20	1	720	300					1	20	10		R	RCPT - IT TICKER 4	14
15	RCPT - EAS SYSTEM	R		12	20	1			180	360			1	20	12		R	RCPT - IT ROOM 1	16
17	RCPT - SERVICE HUB	R		12	20	1					360	360	1	20	12		R	RCPT - IT ROOM 2	18
19	RCPT - CHARGING 1	R		12	20	1	360	360					1	20	12		R	RCPT - IT ROOM 3	20
21	RCPT - CHARGING 2	R		12	20	1			360	360			1	20	12		R	RCPT - IT ROOM 4	22
23	RCPT - FRONT CABINET	R		12	20	1					360	1000	1	20	12		R	RCPT - AV RACK 1	24
25	RCPT - CASH WRAP COMP 1	R		12	20	1	720	1000					1	20	12		R	RCPT - AV RACK 2	26
27	RCPT - CASH WRAP COMP 2	R		12	20	1			720	1000			1	20	12		R	RCPT - IT RACK 1	28
29	RCPT - CASH WRAP GEN	R		12	20	1					720	1000	1	20	12		R	RCPT - IT RACK 2	30
31	RCPT - STOCKROOM / BELL	R Z		12	20	1	870	360					1	20	12		R	RCPT - SALES TICKER 1	32
33	RCPT - STOCK RCVG DESK	R		12	20	1			720	360			1	20	12		R	RCPT - SALES TICKER 2	34
35	RCPT - BOH GEN 2	R		12	20	1					1080	360	1	20	12		R	RCPT - SALES TICKER 3	36
37	RCPT - LOUNGE TV	R		12	20	1	180	360					1	20	12		R	RCPT - SALES TICKER 4	38
39	RCPT - BOH GEN 1	R		12	20	1			1080	500			1	20	12		Z	PWR - OPUS	40
41	RCPT - RADIO SHELF	R		12	20	1					720	200	1	20	12		Z	PWR - VAV MODULE	42
43	RCPT - MICROWAVE	R		12	20	1	1200	1000					1	20	12	LCK	Z	PWR - RR HAND DRYER	44
45	RCPT - COUNTERTCP L	R		12	20	1			1200	1000			1	20	12	LCK	Z	PWR - ADA RR HAND DRYER	46
47	RCPT - COUNTERTCP R	R		12	20	1					1200	500	1	20	12		Z	PWR - RPS	48
49	RCPT - REFRIGERATOR	R	GF	12	20	1	800	50					1	20	12		Z	PWR - WSS	50
51	RCPT - WATER FILTER	R		12	20	1			1200	0			1	20				SPARE	52
53	RCPT - VENDING MACHINE	R	GF	12	20	1					800	0	1	20				SPARE	54
55	RCPT - PRINTER	R		12	20	1	180	0					1	20				SPARE	56
57	RCPT - ASM DESK COMP	R		12	20	1			1080	0			1	20				SPARE	58
59	RCPT - WATER COOLER	R	GF	12	20	1					180	0	1	20				SPARE	60
61	RCPT - RTU CONV	R		12	20	1	900	0					1	20				SPARE	62
63	RCPT - SALES GEN	R		12	20	1			720	0			1	20				SPARE	64
65	SPARE				20	1					0	0	1	20				SPARE	66
67	SPARE				20	1	0	0					1	20				SPARE	68
69	SPARE				20	1			0	0			1	20				SPARE	70
71	SPARE				20	1					0	0	1	20				SPARE	72
73	SPARE				20	1	0	0					1	20				SPARE	74
75	SPARE				20	1			0	0			1	20				SPARE	76
77	SPARE				20	1					0	0	1	20				SPARE	78
79							0	0					1	20				SPARE	80
81	KW METER				20	3			0	0			1	20				SPARE	82
83											0	0	1	20				SPARE	84
				TOTAL LOAD (VA):			10560 VA		12040 VA		10580 VA								
				TOTAL AMPS:			88 A		100 A		88 A								

LOAD TYPE	CONNECTED LOAD	DEMAND FACTOR	NEC DEMAND
EXISTING LOAD (E)	0 VA	100%	0 VA
COOLING (C)	0 VA	0%	0 VA
HEATING (H)	0 VA	100%	0 VA
LIGHTING (L)	29420 VA	67%	19710 VA
RECEPTACLES (R)	0 VA	100%	0 VA
MOTORS (M)	0 VA	100%	0 VA
SUPPLEMENTAL HEAT (U)	0 VA	100%	0 VA
MISC EQUIP (Z)	3760 VA	100%	3760 VA
REFRIGERATION (F)	0 VA	100%	0 VA
SIGN/DISPLAY (D)	0 VA	125%	0 VA
KITCHEN (K)	0 VA	100%	0 VA
LARGEST MOTOR	0 VA	125%	0 VA
SHOW WINDOW (W)	0 VA	125%	0 VA
TRACK LIGHTING	6900 VA	100%	6900 VA

PANELBOARD NOTES

PANELBOARD TOTALS	
TOTAL CONNECTED LOAD	40080 VA
TOTAL NEC LOAD	30370 VA
TOTAL CONNECTED CURRENT	111 A
TOTAL NEC DEMAND CURRENT	84 A

PANELBOARD: L2 (NEW)

BUS AMPS: 150A
MAIN SIZE/TYPE: 150A M.C.B.
VOLTS/PHASE: 208Y/120 V 3P/4W
SUPPLIED BY: MDP VIA TX-L

FAULT CURRENT: 4,274A
AIC RATED: FULLY RATED
AIC RATING: FCA +10% MINIMUM
SERVES: NIKE STORE
MOUNTING: SURFACE
LOCATION: IFS (STOCKROOM)

EQUIPMENT GROUND BUS
LINE-SIDE LUGS: MECHANICAL

CKT NO.	DESCRIPTION	LOAD TYPE	NOTES	WIRE SIZE	BKR AMP	P	PHASE A		PHASE B		PHASE C		P	BKR AMP	WIRE SIZE	NOTES	LOAD TYPE	DESCRIPTION	CKT NO.
1	LTG - SALES GEN W	L	Z1/DIM/EM	10	20	1	1560	900					1	20	12	Z3/PS	W	RCPT - W SHOW WINDOWS	2
3	LTG - SALES GEN M/D	L	Z1/DIM/EM	12	20	1			1120	720			1	20	12	Z3/PS	W	RCPT - E SHOW WINDOWS	4
5	LTG - SALES GEN E	L	Z1/DIM/EM	10	20	1					1360	900	1	20	12	Z6/PS	R	RCPT - LOUNGE / HC PLGMLD	6
7	LTG - SALES GRID FRONT	L	Z4/PS	12	20	1	715	360					1	20	12	Z6/PS	R	RCPT - ASM PLGMLD L	8
9	LTG - SALES GRID M/D	L	Z4/PS	12	20	1			416	360			1	20	12	Z6/PS	R	RCPT - ASM PLGMLD R	10
11	LTG - SALES GRID REAR E	L	Z1/PS	12	20	1					585	1200	1	20	10	Z7/PS	D	PWR - SIGNAGE	12
13	LTG - SALES GRID REAR W	L	Z1/PS	12	20	1	585	696					1	20	12	Z1/PS	M	PWR - EF-1	14
15	LTG - SALES TRK N	L	Z4/PS	12	20	1			2400	528			1	20	12	Z1/PS	M	PWR - EF-2	16
17	LTG - SALES TRK M/D	L	Z4/PS	12	20	1					2400	248	1	20	12	Z1/PS	M	PWR - RP	18
19	LTG - SALES TRK E	L	Z4/PS	12	20	1	2400	0					1	20		PS	Z	SPARE	20
21	LTG - SALES TRK W	L	Z4/PS	12	20	1			2400	0			1	20		PS	Z	SPARE	22
23	LTG - CORRIDORS	L	Z1/DIM/EM	12	20	1					390	0	1	20		PS	Z	SPARE	24
25	LTG - FITTING ROOMS	L	EM	10	20	1	1350	0					1	20		PS	Z	SPARE	26
27	LTG - STOCKROOM	L	Z5/DIM/EM	12	20	1			676	0			1	20				SPARE	28
29	LTG - BACK OF HOUSE	L	Z1/DIM/EM	12	20	1					860	0	1	20				SPARE	30
31	SPARE				20	1	0	0					1	20				SPARE	32
33	SPARE				20	1			0	0			1	20				SPARE	34
35	SPARE				20	1					0	0	1	20				SPARE	36
37	SPARE				20	1	0	0					1	20				SPARE	38
39	SPARE				20	1			0	0			1	20				SPARE	40
41	SPARE				20	1					0	0	1	20				SPARE	42
				TOTAL LOAD (VA):			8566 VA		8620 VA		7943 VA								
				TOTAL AMPS:			72 A		73 A		66 A								

LOAD TYPE	CONNECTED LOAD	DEMAND FACTOR	NEC DEMAND
EXISTING LOAD (E)	0 VA	100%	0 VA
COOLING (C)	0 VA	0%	0 VA
HEATING (H)	0 VA	100%	0 VA
LIGHTING (L)	19217 VA	125%	24021 VA
RECEPTACLES (R)	1620 VA	100%	1620 VA
MOTORS (M)	776 VA	100%	776 VA
SUPPLEMENTAL HEAT (U)	0 VA	100%	0 VA
MISC EQUIP (Z)	0 VA	100%	0 VA
REFRIGERATION (F)	0 VA	100%	0 VA
SIGN/DISPLAY (D)	1200 VA	125%	1500 VA
KITCHEN (K)	0 VA	100%	0 VA
LARGEST MOTOR	696 VA	125%	870 VA
SHOW WINDOW (W)	0 VA	125%	0 VA
TRACK LIGHTING	6900 VA	100%	6900 VA

PANELBOARD NOTES

LIGHTING COLOR CODE		
ZONE 1	ATHLETE	GREEN
ZONE 2	CUSTOMER	CYAN
ZONE 3	SHOW WINDOWS	LIGHT PINK
ZONE 4	SALES DISPLAY	ORANGE
ZONE 5	STOCK ROOM	PURPLE
ZONE 6	BOH PLUGMOLD	PINK
ZONE 7	EXT. SIGNS	RED

PANELBOARD TOTALS	
TOTAL CONNECTED LOAD	30409 VA
TOTAL NEC LOAD	35687 VA
TOTAL CONNECTED CURRENT	84 A
TOTAL NEC DEMAND CURRENT	99 A

Panel MDP	Panel L1
	Panel L2

DEAN W. CHANDLER

DRAWING USED FOR REFERENCE ONLY AND IS NOT TO BE SUBSTITUTED FOR CURRENT MEP DRAWING

Engineer:

Project Owner:

NIKE, Inc.
One Bowerman Drive
Beaverton, OR 97005
(503) 671-6453
www.nike.com

Project Address:

NIKE FACTORY STORE
WATERFORD LAKES SHOPPING CENTER
449 N. ALAFAYA TRAIL
ORLANDO, FL 32828
TEMPLATE ISSUE DATE: 11/20/18

Fixture Package:
UNITE

Stamp:

Issued For:
PERMIT/BID

Issue Date:
11/06/2020

Revisions:

NO.	REASON	DATE

PROJECT MANAGER:
KH
CHECKED BY:
DRAWN BY:
Author

Project Number:
62301411

Sheet Title:
ELECTRICAL PANELBOARD SCHEDULES

Sheet Number:
BAS-E3.1

LIGHTING CONTROL DEVICE SCHEDULE

LINE-VOLTAGE DIMMING WALL SWITCH

SYMBOL TAG	MANUFACTURER MODEL/SERIES	ALTERNATE MANUFACTURER	DEVICE DESCRIPTION	VOLTAGE	NOTES
DX#	LEVITON AWSMT-XDW	-	PRESET SLIDE DIMMER SWITCH FOR MANUAL ON/OFF AND DIMMING CONTROL. LOCATE DOWNSTREAM OF EMS CONTROL. LOAD: 120V=1920W, 277V=4432W	120/ 277	

LINE-VOLTAGE WALL SWITCH OCCUPANCY SENSORS

SYMBOL TAG	MANUFACTURER MODEL/SERIES	ALTERNATE MANUFACTURER	DEVICE DESCRIPTION	COVERAGE (W X D)	VOLTAGE	NOTES
OS	LEGRAND PW-100	ACUITY, COOPER HUBBELL, LEVITON LUTRON	WALL MOUNT PASSIVE INFRARED OCCUPANCY SENSOR. INTEGRAL MANUAL OVERRIDE SWITCH. SINGLE RELAY. LINE VOLTAGE. LOAD: 120V=800W, 277V=1200W.	MAJOR 30' x 35' MINOR 15' x 20'	120/ 277	

LINE-VOLTAGE DIMMING WALL SWITCH OCCUPANCY SENSORS

SYMBOL TAG	MANUFACTURER MODEL/SERIES	ALTERNATE MANUFACTURER	DEVICE DESCRIPTION	COVERAGE (W X D)	VOLTAGE	NOTES
OSD	LEGRAND PW-100D	N/A	WALL MOUNT PASSIVE INFRARED OCCUPANCY SENSOR. INTEGRAL MANUAL OVERRIDE SWITCH. SINGLE RELAY. LINE VOLTAGE. FORWARD PHASE DIMMING. LOAD: 120V=700W, 277V=1200W.	MAJOR 30' x 35' MINOR 15' x 20'	120/ 277	

NETWORK LIGHTING CONTROL SYSTEMS

NETWORK OCCUPANCY SENSORS

SYMBOL TAG	MANUFACTURER MODEL/SERIES	ALTERNATE MANUFACTURER	DEVICE DESCRIPTION	COVERAGE (W X D)	VOLTAGE	NOTES
A	LEGRAND LMDC-100	-	CEILING MOUNT DUAL TECHNOLOGY OCCUPANCY SENSOR. FURNISHED BY EMS VENDOR, INSTALLED BY CONTRACTOR.	PIR MAJOR 32' Ø PIR MINOR 15' Ø ULT MAJOR 25' x 25'	24	

NETWORK ROOM CONTROLLERS (POWER PACK)

SYMBOL TAG	MANUFACTURER MODEL/SERIES	ALTERNATE MANUFACTURER	DEVICE DESCRIPTION	VOLTAGE	NOTES
RD1	LEGRAND LMRC-211	-	DIGITAL ROOM CONTROLLER FOR ON/OFF/0-10V DIMMING CONTROL OF LIGHTING LOADS. FURNISHED BY EMS VENDOR, INSTALLED BY CONTRACTOR.	120/ 277	

NETWORK LIGHTING SWITCHES

SYMBOL TAG	MANUFACTURER MODEL/SERIES	ALTERNATE MANUFACTURER	DEVICE DESCRIPTION	VOLTAGE	NOTES
LV1	LEGRAND LMSW-100 SERIES	-	DIGITAL MULTI-BUTTON SWITCH FOR MANUAL ON/OFF AND SCENE CONTROL. FURNISHED BY EMS VENDOR, INSTALLED BY CONTRACTOR.	24	
LD1	LEGRAND LMDM-101	-	DIGITAL SWITCH FOR MANUAL ON/OFF/DIMMING CONTROL. FURNISHED BY EMS VENDOR, INSTALLED BY CONTRACTOR.	24	

AUXILIARY NETWORK LIGHTING EQUIPMENT

SYMBOL TAG	MANUFACTURER MODEL/SERIES	ALTERNATE MANUFACTURER	DEVICE DESCRIPTION	VOLTAGE	NOTES
B	LEGRAND LMBC-300	-	WIRED NETWORK BRIDGE TO CONNECT DLM ROOM CONTROLLERS TO BACNET NETWORK. FURNISHED BY EMS VENDOR, INSTALLED BY CONTRACTOR.	24	

GENERAL NOTES:

A. OCCUPANCY SENSOR LAYOUT DESIGNED FROM BASIS-OF-DESIGN COVERAGE PATTERNS. IF SUBMITTING ALTERNATE PER 'EQUIVALENT MANUFACTURER' COLUMN, ADJUST SENSOR QUANTITIES AND LOCATIONS PER MANUFACTURER-SPECIFIC SPACING CRITERIA.
B. PROVIDE SHOP DRAWINGS FOR ENGINEER AND ARCHITECT REVIEW THAT INCLUDE PRODUCT CUTSHEETS AND PROJECT-SPECIFIC LAYOUTS. LAYOUTS MUST INCLUDE SENSOR LOCATIONS, HEIGHTS, ORIENTATION, AND COVERAGE AREAS. SHOW COORDINATION WITH ALL OTHER CEILING DEVICES INCLUDING BUT NOT LIMITED TO HVAC SUPPLY AND RETURN GRILLES, SPRINKLERS, LIGHT FIXTURES, AND OTHER OWNER-PROVIDED CEILING MOUNTED DEVICES SUCH AS SPEAKERS, SECURITY CAMERAS, PROJECTORS, ETC. (SENSORS MAY BE ADVERSELY AFFECTED IF LOCATED TOO CLOSE TO OTHER CEILING MOUNTED DEVICES). ALSO PROVIDE SCHEMATICS AND SCHEDULES WHEN APPLICABLE.
C. LIGHTING CONTROLS PRICING SHALL BE COMPLETELY SEPARATE OF ANY LIGHT FIXTURE PRICING.
D. VERIFY COLOR(S) FOR ALL WALL AND CEILING MOUNTED DEVICES WITH THE ARCHITECT.
E. ALL WALL SWITCH AND CEILING SENSORS SHALL HAVE AN ADJUSTABLE TIME DELAY RANGE OF 0-30 MIN, UNO. CONFIRM SENSOR SETTINGS WITH SEQUENCE OF OPERATIONS AND OWNER PRIOR TO SYSTEM COMMISSIONING.
F. PROVIDE COPIES OF OPERATION AND MAINTENANCE INSTRUCTIONS FOR ALL DEVICES TO OWNER.
G. PROVIDE A NEUTRAL CONDUCTOR TO ALL WALL SWITCH LOCATIONS PER NEC REQUIREMENTS.
H. DO NOT SHARE NEUTRAL CONDUCTOR ON LOAD SIDE OF DIMMERS.

VERSION: 4

LIGHT FIXTURE SCHEDULE

TYPE	MANUFACTURER / MODEL #	LAMPING / LIGHT SOURCE	DIMMING TYPE	VOLTAGE	INPUT WATTS	INPUT VA	DESCRIPTION	NOTES
AL_	AMERLUX #PROD-A16-BAT80-ASW20-10-35-ST-120/277-X'-CON-0-10V-COMBO	LED	0-10V	120	10/FT	10/FT	PRODUCER COMBO CUSTOM RUNS - BAT80 LED PRODUCER 3500K 10W/FT. FACTORY WIRED INSTALLED PER RUN LENGTHS	
AL_M	AMERLUX #PROD-A16-BAT80-ASW20-10-35-ST-120/277-X'-CON-0-10V-COMBO	LED	0-10V	120	10/FT	10/FT	SAME AS AL_ EXCEPT WITH EMERGENCY BATTERY BACK-UP CAPABLE OF PRODUCING 1000 LUMENS FOR 90 MINUTES MINIMUM.	
AT	AMERLUX #PROD	TRACK	-	120	-	-	PRODUCER COMBO CUSTOM RUNS - CONTECH SINGLE CIRCUIT 120V TRACK. FACTORY WIRED INSTALLED PER RUN LENGTHS	
C	LF ILLUMIATION# TXA01-C-J-19C-9230-M-D1-1-SS	LED	-	120/277	19	19	LED TRACK HEAD 2300LUMEN 3000K SILVER INCLUDES SPOT & FLOOD OPTICS	
F4	BARTCO # BFL800-1S-32-120MKX-SL	FLUORESCENT 13T8/48-3500	-	120/277	13	13	CHEVRON FIXTURE	1
K8	MERCURY # MM-132-OCT-C-8T-ELBD-ET8DRVR-UNI	FLUORESCENT 13T8/48-3500	0-10V	120/277	26	26	8'-0" STRIP FIXTURE. PROVIDE WITH ADVANCE T8 DRIVER FACTORY INSTALLED, INCLUDES WIREGUARD	1
K8EM	MERCURY # MM-132-OCT-C-8T-ELBD-ET8DRVR-UNI-B50	FLUORESCENT 13T8/48-3500	0-10V	120/277	26	26	SAME AS K8, EXCEPT WITH EMERGENCY BATTERY BACK-UP CAPABLE OF PROVIDING 500 LUMENS FOR 90 MINUTES MINIMUM.	1
L	CREE# LS4-40L-35K-10V	LED	0-10V	120/277	40	40	4'-0" LED SURFACE WRAP FIXTURE.	
LB	CONTECH LUXBEAM SYSTEM #LB122-X-S	TRACK	-	120	-	-	SINGLE CIRCUIT LUXBEAM SILVER - PROVIDE LENGTHS AS REQUIRED FOR CONTINUOUS RUN.COORDINATE WITH MANUFACTURER AND PROVIDE ALL ACCESSORIES REQUIRED FOR COMPLETE INSTALLATION.	
M	PHILIPS #2FGG42B835-4-D-UNV-DIM	LED	0-10V	120/277	35	35	RECESSED 2'x4' LED FIXTURE PROVIDE DRYWALL MOUNTING KIT WHERE REQUIRED.	
MEM	PHILIPS #2FGG42B835-4-D-UNV-DIM-EMLED	LED	0-10V	120/277	35	35	SAME AS M, EXCEPT WITH EMERGENCY BATTERY BACK-UP, 1100 LUMEN, 90 MINUTE MIN.	
R	INTENSE #SS6G3DR-L3-358-0-10V / IC630CSFW	LED	0-10V	120	19	21	RECESSED 6" LED DOWNLIGHT WITH REMOTE PHOSPHOR TECHNOLOGY, CLEAR OPEN REFLECTOR, SELF FLANGED WHITE TRIM. 1100 DELIVERED LUMENS MINIMUM. 3000K, 80+ CRI, 50,000 HOURS WITH INTEGRAL ELECTRONIC DRIVER.	
REM	INTENSE #SS6G3DR-L3-358-0-10VEM7 / IC630CSFW	LED	0-10V	120	19	21	SAME AS R, EXCEPT WITH EMERGENCY BATTERY BACK-UP CAPABLE OF PRODUCING 450 LUMENS FOR 90 MINUTES MINIMUM.	
RW	INTENSE #GD4WRL335-D101 IRW400C-SFW	LED	0-10V	120	34	34	WALL WASH 4" LED DOWNLIGHT WITH CLEAR OPEN REFLECTOR AND SELF FLANGED WHITE TRIM. 3500K, 80+ CRT, DIMMABLE.	
SM	CONTECH #TLT12V2	LED	0-10V	120	1.5/FT	1.5/FT	PROVIDE EACH MIRROR WITH 50W 0-10V DIMMING DRIVER. COORDINATE EXACT NUMBER OF DRIVERS WITH LIGHTING VENDOR, AND LOCATIONS AND ACCESSORIES WITH ARCHITECT PRIOR TO ORDERING.	
U	CONTECH #CTL182H35DS	LED	-	120/277	41	41	LED WALL WASH HEAD 4700LUMEN 3000K SILVER	
UC	MERCURY LIGHTING #LUC5-8-LED-24-120V	LED	-	120	20	24	UNDERCABINET 2'-0" TASK LIGHT LED FIXTURE WITH ROCKER SWITCH	
EM	EVENLITE #APR-25-LC-UI-SD	LED	-	120/277	50	50	EMERGENCY CONCEALED LIGHT WITH EMERGENCY BATTERY BACK-UP CAPABLE OF PRODUCING 900 LUMENS FOR 90 MINUTES MINIMUM. W- WALL MOUNTED AT 8'-0" AFF	
X	LIGHTALARMS #QLXN500-R	LED	-	120/277	5	5	UNIVERSAL MOUNT EXIT SIGN WITH WHITE HOUSING AND RED LETTERS. EMERGENCY BATTERY BACK-UP CAPABLE OF POWERING FIXTURE FOR 90 MINUTES MINIMUM.	

GENERAL NOTES:

A. ALL FIXTURES PURCHASED AND FURNISHED BY OWNER. COORDINATE WITH OWNER CONSTRUCTION PROJECT MANAGER FOR ALL LIGHTING.
B. CONFIRM MOUNTING, FINISH, ACCESSORIES, LAMP COLOR TEMPERATURE, BEAM SPREAD, ETC. WITH ARCHITECT DRAWINGS FOR ALL LIGHT FIXTURES PRIOR TO ORDERING.
C. VERIFY CEILING CONDITIONS AND COORDINATE LIGHT FIXTURE MOUNTING HARDWARE AND TRIMS NEEDED TO SUIT CEILING CONDITIONS PRIOR TO ORDERING.
D. REFER TO ARCHITECTURAL DRAWINGS AND DETAILS FOR FINAL LOCATIONS, MOUNTING HEIGHTS, AND ADDITIONAL MOUNTING INFORMATION. CONTACT ARCHITECT IMMEDIATELY IF THERE ARE DISCREPANCIES BETWEEN THE ARCHITECTURAL AND ELECTRICAL LIGHTING PLANS.
E. REFER TO SPECIFICATIONS FOR ACCEPTABLE LAMP AND BALLAST MANUFACTURERS AND ADDITIONAL INFORMATION.
F. REFER TO PANELBOARD SCHEDULES, DETAILS ON THIS SHEET, AND EMS VENDOR DRAWINGS FOR CONTROL INFORMATION.
G. PROVIDE A MINIMUM OF 12 LAMPS OF EACH TYPE DESIGNATED AS SPARE FOR OWNER USE. LAMPS THAT BURN OUT DURING CONSTRUCTION PRIOR TO OPENING ARE THE RESPONSIBILITY OF THE CONTRACTOR TO REPLACE AND SHALL NOT COME OUT OF THE DESIGNATED SPARE LAMPS FOR OWNER USE.
H. COORDINATE WITH AMERLUX FOR EXACT FIXTURE MODEL NUMBERS. PROVIDE ALL PARTS, PIECES, ETC. REQUIRED FOR A COMPLETE AND FUNCTIONAL SYSTEM.

LIGHTING ZONE CONTROL SCHEDULE

ZONE	DESCRIPTION
1	SALES ATHLETE
2	SALES CUSTOMER
3	INTERIOR SIGNAGE & SHOW WINDOW RECEPTACLES
4	SALES DISPLAY
5	STOCKROOM
6	OFFICE RECEPTACLES
7	EXTERIOR SIGNAGE

MULTI-BUTTON SWITCH SCHEDULE 'MS1'

BUTTON	BUTTON LABEL	RELAYS OR ZONES CONTROLLED
1	ZONE 1	SALES ATHLETE
2	ZONE 2	SALES CUSTOMER
3	ZONE 3	INT SIGNAGE & SHOW WINDOW REC
4	ZONE 4	SALES DISPLAY

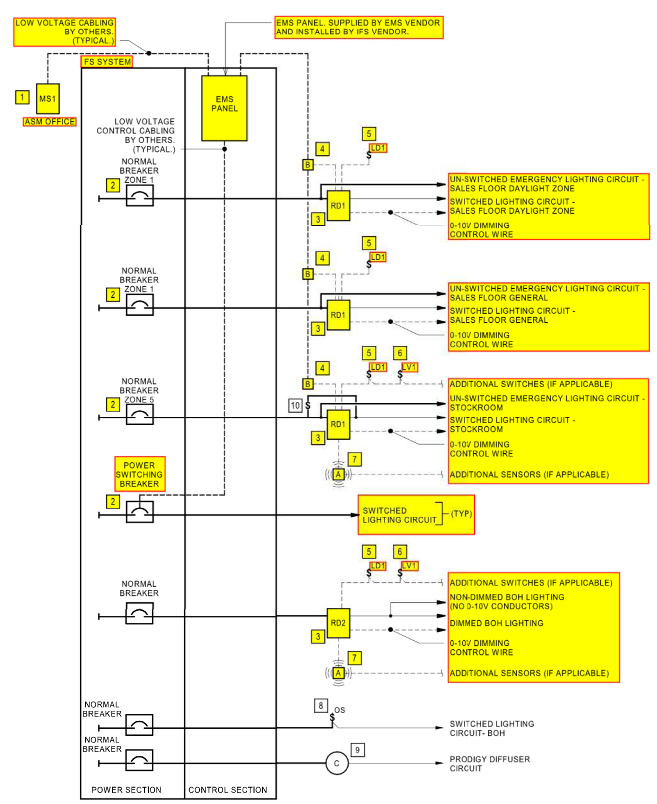

1 LIGHTING CONTROL IFS DIAGRAM
NTS

LIGHTING CONTROL SYSTEM GENERAL NOTES:

- ELECTRICAL CONTRACTOR TO PROVIDE CIRCUIT TERMINATION AT EITHER CIRCUIT BREAKER OR TERMINATION BLOCK. REFER TO PANELBOARD SCHEDULES FOR ADDITIONAL INFORMATION.
- MASTER LIGHTING CONTROLS SUPPLIED BY EMS VENDOR INSTALLED WITHIN IFS EQUIPMENT BY IFS MANUFACTURER. CONTROL WIRING AND ASSOCIATED TERMINATIONS INTEGRAL TO IFS EQUIPMENT BY OTHERS.
- E.C. SHALL INSTALL ALL FIELD COMPONENTS FURNISHED BY EMS VENDOR. E.C. SHALL PROVIDE ALL ASSOCIATED CONDUIT, WIRING AND TERMINATIONS. REFER TO EMS DRAWINGS FOR ADDITIONAL INFORMATION AND INSTALLATION REQUIREMENTS. COORDINATE ALL WORK WITH EMS VENDOR.
- LOCAL DIMMING AND OCCUPANCY SENSOR LIGHTING CONTROLS SUPPLIED BY LIGHTING VENDOR.
- E.C. SHALL INSTALL ALL COMPONENTS, CONDUIT, WIRING AND TERMINATIONS ASSOCIATED WITH LOCAL DIMMING AND OCCUPANCY SENSOR CONTROLS.

LIGHTING CONTROL DIAGRAM KEYNOTES:

1 MASTER LIGHTING OVERRIDE SWITCH PROVIDED BY EMS VENDOR. SWITCH SHALL CONTROL INDICATED ZONES. REFER TO MASTER CONTROL SWITCH SCHEDULE ON THIS SHEET AND EMS DRAWINGS FOR ADDITIONAL INFORMATION.

2 REFER TO PANELBOARD SCHEDULES FOR LIGHTING ZONE CONTROL INFORMATION.

3 0-10V DIMMING ROOM CONTROLLER, FURNISHED BY EMS VENDOR AND INSTALLED BY CONTRACTOR. REFER TO ELECTRICAL LIGHTING PLAN NOTE #9 AND DETAIL 1, SHEET E1.0, FOR ADDITIONAL INFORMATION.

4 LOW VOLTAGE NETWORK BRIDGE FOR CONNECTING ROOM CONTROLLER TO EMS PANEL, FURNISHED BY EMS VENDOR. CONTRACTOR TO INSTALL LOW VOLTAGE NETWORK BRIDGE AND PROVIDE CABLE BETWEEN BRIDGE AND ROOM CONTROLLER. CONTRACTOR TO PROVIDE CABLE FROM BRIDGE TO EMS PANEL. COORDINATE EXACT REQUIREMENT WITH EMS VENDOR PRIOR TO INSTALLATION.

5 LOW VOLTAGE DIMMING SWITCH FOR LOCAL LIGHTING CONTROL, FURNISHED BY EMS VENDOR AND INSTALLED BY CONTRACTOR. REFER TO DETAIL 1, SHEET E1.0, FOR ADDITIONAL INFORMATION. COORDINATE INSTALLATION REQUIREMENTS WITH EMS VENDOR PRIOR TO INSTALLATION.

6 LOW VOLTAGE SWITCH WHERE REQUIRED FOR MULTI-WAY SWITCHING, EMS FURNISHED AND CONTRACTOR INSTALLED. REFER TO DETAIL 1, SHEET E1.0, FOR LOCATIONS. COORDINATE EXACT REQUIREMENTS WITH EMS VENDOR PRIOR TO INSTALLATION.

7 LOW VOLTAGE OCCUPANCY SENSOR, FURNISHED BY EMS VENDOR AND INSTALLED BY CONTRACTOR. COORDINATE EXACT LOCATION AND INSTALLATION REQUIREMENTS WITH EMS VENDOR PRIOR TO INSTALLATION.

8 LINE VOLTAGE OCCUPANCY SWITCH FOR LIGHTING CONTROL, PROVIDED BY CONTRACTOR. REFER TO LIGHTING CONTROL DEVICE SCHEDULE ON THIS SHEET FOR ADDITIONAL INFORMATION.

9 PRODIGY DIFFUSER CONTROL POWER PACK. REFER TO LIGHTING CONTROL DEVICE SCHEDULE ON *THIS SHEET FOR ADDITIONAL INFORMATION FOR ADDITIONAL INFORMATION.*

10 ELECTRICAL MAINTENANCE OVERRIDE SWITCH. INSTALL SWITCH SO WHEN SWITCH IS IN THE ON POSITION LIGHTS ARE ON AND CANNOT BE TURNED OFF BY ROOM CONTROLLER.

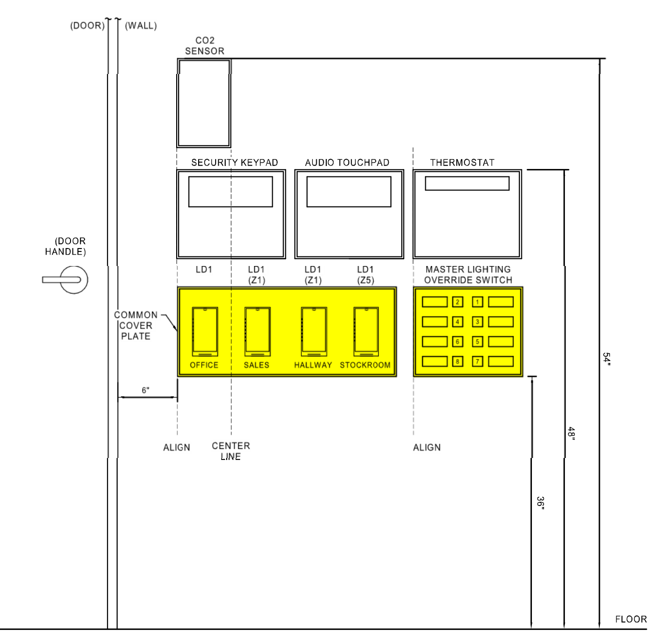

TYPICAL SWITCHBANK ELEVATION GENERAL NOTES:

1. ARRANGE SWITCHES AS INDICATED ABOVE TO CONDENCE WALL SPACE. MIRROR ARRANGEMENT OF CONTROLS IF DOOR HANDLE IS ON THE OPPOSITE SIDE OF DOOR.
2. COORDINATE EXACT NUMBER OF SWITCHES AND DEVICES WITH DRAWINGS. DETAIL FOR MOUNTING HEIGHT REFERENCE ONLY.
3. MASTER LIGHTING OVERRIDE SWITCH PROVIDED BY EMS VENDOR AND INSTALLED BY ELECTRICAL CONTRACTOR. REFER TO MASTER CONTROL SWITCH SCHEDULE ON THIS SHEET FOR BUTTON LAYOUT. PROVIDE DUAL-GANG JUNCTION BOX AND INSTALL AT HEIGHT INDICATED IN DETAIL. SWITCH SHALL HAVE INDIVIDUAL OVERRIDES FOR EACH ZONE AND FOR FITTING ROOM LIGHTING.
4. LOW VOLTAGE SWITCHES FOR LOCAL ROOM LIGHTING OVERRIDE. SWITCHES SHALL BE LOCATED DIRECTLY NEXT TO DOOR FRAME AS SHOWN. LOCATE UNDER COMMON COVERPLATE WHEN POSSIBLE. PROVIDE LABEL FOR EACH SWITCH AS NDICATED.

3 TYPICAL SWITCHBANK ELEVATION
NTS

DRAWING USED FOR REFERENCE ONLY AND IS NOT TO BE SUBSTITUTED FOR CURRENT MEP DRAWING

Engineer:

Project Owner:

NIKE, Inc.
One Bowerman Drive
Beaverton, OR 97005
(503) 671-6453
www.nike.com

Project Address:

NIKE FACTORY STORE
WATERFORD LAKES SHOPPING CENTER
449 N. ALAFAYA TRAIL
ORLANDO, FL 32828
TEMPLATE ISSUE DATE: 11/28/2018

Fixture Package: UNITE

Stamp:

Issued For: PERMIT/BID

Issue Date: 11/06/2020

Revisions:

NO.	REASON	DATE

PROJECT MANAGER: KH
CHECKED BY:
DRAWN BY: Author

Project Number: 62301411

Sheet Title: ELECTRICAL LIGHTING DETAILS AND SCHEDULES

Sheet Number: BAS-E3.2

DEAN W. CHANDLER

DATA CONDUIT FILL TABLE

TRADE SIZE	INTERNAL DIAMETER	TOTAL AREA	1 CABLE	2 CABLE	OVER 2 CABLES	REDUCTION FOR 90 DEGREE BENDS	NUMBER OF 4 PAIR CABLES ALLOWED		NUMBER OF NIKE STANDARD 4 CABLE STATIONS
(IN.)	(IN.)	(SQ. IN.)	53% FILL	31% FILL	40% FILL	(2 MAX)	(CAT 6]	WAPS ONLY (CAT 6A)	
3/4	0.824	0.533	0.282	0.165	0.213	0.154	5	6	1
1	1.049	0.864	0.458	0.268	0.346	0.25	8	10	2
1-1/4	1.38	1.496	0.793	0.464	0.598	0.432	14	17	4
1-1/2	1.61	2.036	1.079	0.631	0.814	0.588	19	24	6
2	2.067	3.356	1.779	1.04	1.342	0.97	31	39	10
2-1/2	2.731	5.858	3.105	1.816	2.343	1.693	54	68	17
3	3.356	8.846	4.688	2.742	3.538	0	-	147	36
4	4.334	14.753	7.819	4.573	5.901	0	-	245	61

NOTES:
1. CONDUIT SIZES BASED ON EMT CONDUIT.
2. CABLES BASED ON CAT6 AND CAT6A CABLES.

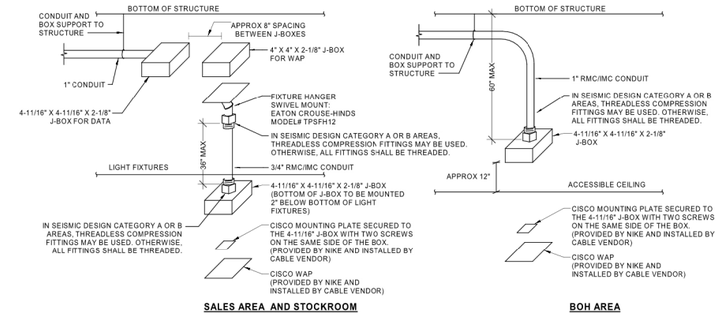

1 WAP MOUNTING DETAIL
NTS

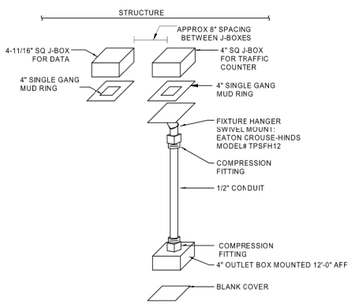

2 TRAFFIC COUNTER MOUNTING DETAIL
NTS

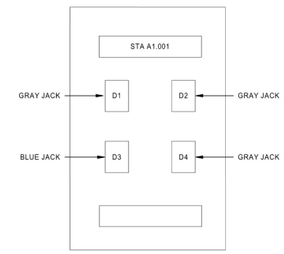

GENERAL NOTES:
1. THIS CONFIGURATION REQUIRES MINIMUM 1" CONDUIT FOR THREE DATA AND ONE VOICE CABLE HOMERUNS ROUTED TO THE TELEPHONE BACKBOARD. COORDINATE REQUIREMENTS WITH NIKE IT.
2. 4-11/16" SQUARE BOX WITH SINGLE GANG MUD RING FOR SINGLE GANG FACEPLATE.
3. CABLE NUMBERING SEQUENCE TO START WITH CASHWRAPS. CONFIRM FINAL NUMBERING SEQUENCE WITH NIKE IT PRIOR TO INSTALLATION.

3 RECEIVING DESK/TV DATA OUTLET CONFIGURATION
NTS

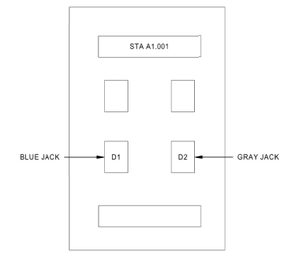

GENERAL NOTES:
1. THIS CONFIGURATION REQUIRES MINIMUM 1" CONDUIT FOR ONE DATA AND ONE VOICE CABLE HOMERUNS ROUTED TO THE TELEPHONE BACKBOARD. COORDINATE REQUIREMENTS WITH NIKE IT.
2. 4-11/16" SQUARE BOX WITH SINGLE GANG MUD RING FOR SINGLE GANG FACEPLATE.
3. CABLE NUMBERING SEQUENCE TO START WITH CASHWRAPS. CONFIRM FINAL NUMBERING SEQUENCE WITH NIKE IT PRIOR TO INSTALLATION.

4 DATA OUTLET CONFIGURATION
NTS

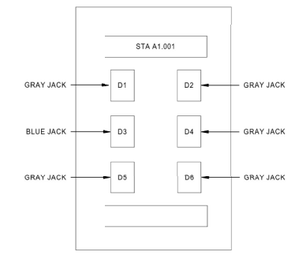

GENERAL NOTES:
1. THIS CONFIGURATION REQUIRES MINIMUM 1" CONDUIT FOR FIVE DATA AND ONE VOICE CABLE HOMERUNS ROUTED TO THE TELEPHONE BACKBOARD. COORDINATE REQUIREMENTS WITH NIKE IT.
2. 4-11/16" SQUARE BOX WITH SINGLE GANG MUD RING FOR SINGLE GANG FACEPLATE.
3. CABLE NUMBERING SEQUENCE TO START WITH CASHWRAPS. CONFIRM FINAL NUMBERING SEQUENCE WITH NIKE IT PRIOR TO INSTALLATION.

5 CASHWRAP DATA OUTLET CONFIGURATION
NTS

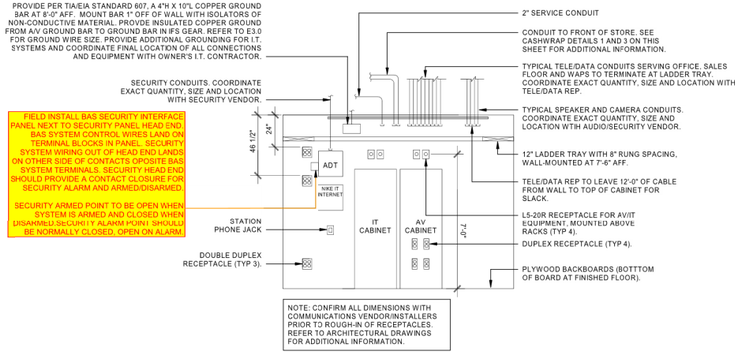

6 NIKE IT EQ ROOM
NTS

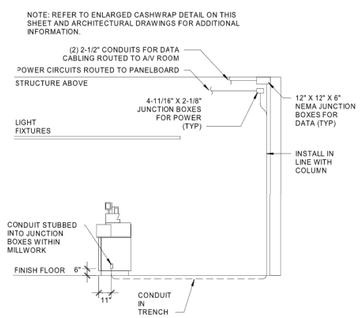

7 CASHWRAP ELEVATION
NTS

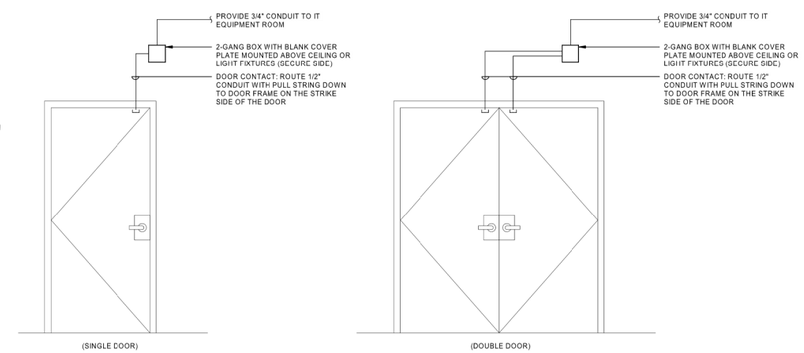

8 DOOR CONTACT DETAIL
12" = 1'-0"

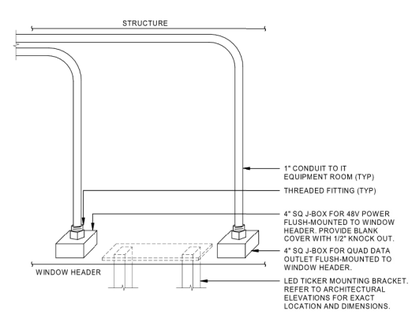

9 WINDOW LED TICKER POWER AND DATA DETAIL
12" = 1'-0"

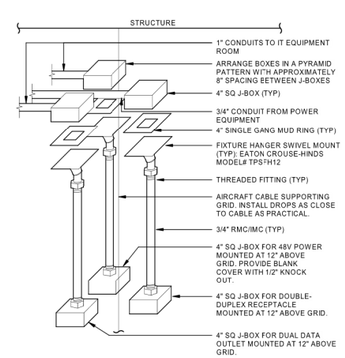

10 LED TICKER POWER AND DATA DETAIL
NTS

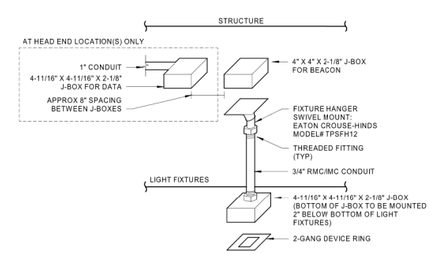

11 BEACON MOUNTING DETAIL
12" = 1'-0"

DEAN W. CHANDLER

DRAWING USED FOR REFERENCE ONLY AND IS NOT TO BE SUBSTITUTED FOR CURRENT MEP DRAWING

Engineer:

Project Owner:

NIKE, Inc.
One Bowerman Drive
Beaverton, OR 97005
(503) 671-6453
www.nike.com

Project Address:

NIKE FACTORY STORE
WATERFORD LAKES SHOPPING CENTER
449 N. ALAFAYA TRAIL
ORLANDO, FL 32828
TEMPLATE ISSUE DATE: 11/26/2018

Fixture Package:
UNITE

Stamp:

Issued For:
PERMIT/BID

Issue Date:
11/06/2020

Revisions:

NO.	REASON	DATE

PROJECT MANAGER:
KH
CHECKED BY:
DRAWN BY:
Author

Project Number:
62301411

Sheet Title:
ELECTRICAL DETAILS

Sheet Number:
BAS-E3.3

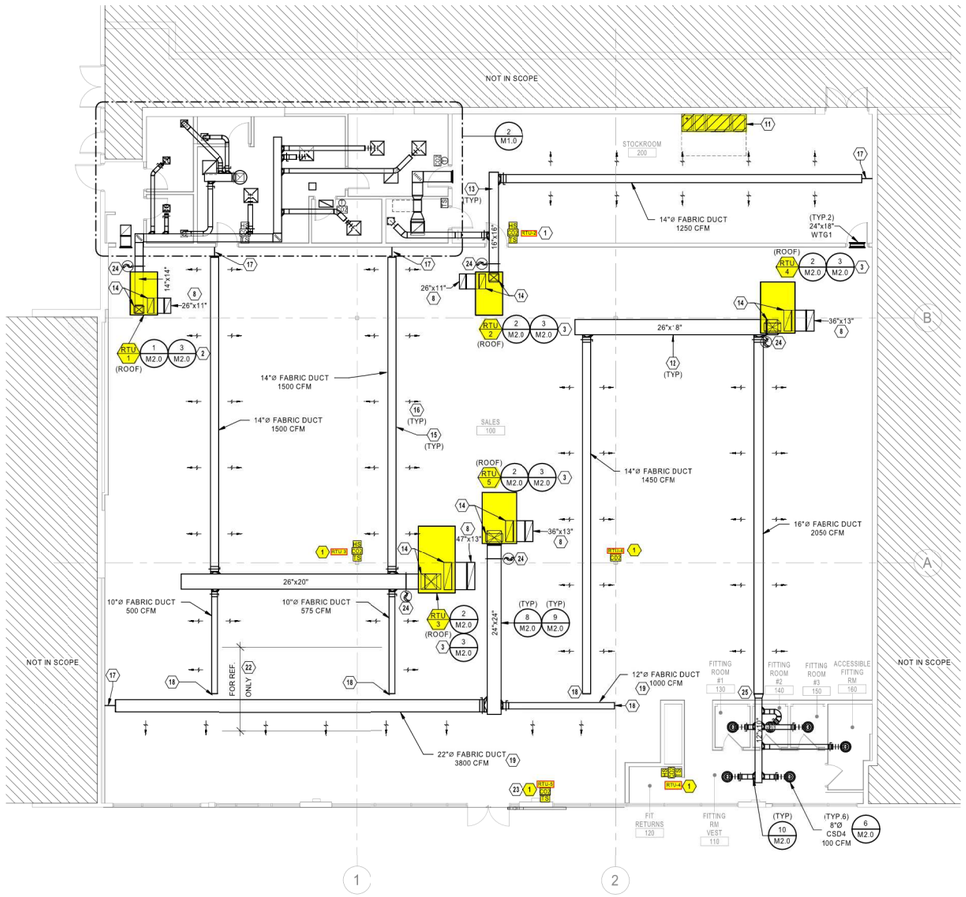

1 HVAC PLAN
1/8" = 1'-0"

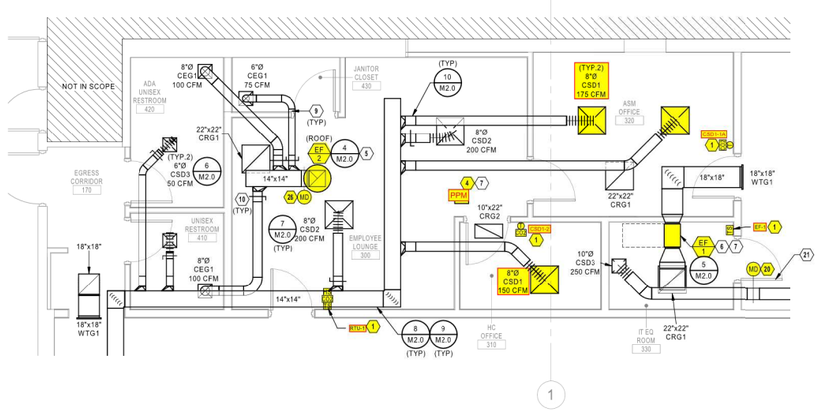

2 ENLARGED BACK OF HOUSE HVAC PLAN
1/4" = 1'-0"

MECHANICAL PLAN NOTES

1. THERMOSTATS AND SENSORS FURNISHED BY EMS VENDOR AND INSTALLED BY DIVISION 26 UNLESS NOTED OTHERWISE.
2. PROVIDE NEW ROOFTOP UNIT AS SCHEDULED WITH NEW CURB ADAPTER FROM NEW UNIT TO EXISTING CURB. PROVIDE A NEW SET OF MERV 13 AIR FILTERS IN UNIT BEFORE TURNING SYSTEM OVER TO OWNER.
3. PROVIDE NEW ROOFTOP UNIT AS SCHEDULED WITH EXISTING ROOF CURB. PROVIDE A NEW SET OF MERV 13 AIR FILTERS IN UNIT BEFORE TURNING SYSTEM OVER TO OWNER.
4. INSTALL VAV POWER MODULE FOR CONTROL OF OFFICE VAV DIFFUSERS IN AN ACCESSIBLE LOCATION ABOVE THE CEILING. DIVISION 26 CONTRACTOR SHALL PROVIDE 120V POWER TO MODULE. REFER TO ELECTRICAL DRAWINGS FOR DETAILS.
5. PROVIDE NEW ROOF-MOUNTED EXHAUST FAN AS SCHEDULED FOR GENERAL RESTROOM EXHAUST.
6. EXHAUST FAN SERVES TO PROVIDE TRANSFER AIR ONLY AND SHALL DISCHARGE AIR INTO THE STOCKROOM.
7. ACCESS TO HVAC EQUIPMENT SHALL BE FROM LAY-IN CEILING. NO CEILING DEVICES SHALL BE PLACED IN THIS LOCATION. COORDINATE FINAL INSTALLED LOCATION SUCH THAT THE HVAC EQUIPMENT REMAINS ACCESSIBLE. VERIFY NO OTHER PIPING, ELECTRICAL CONDUIT, STRUCTURE, AND/OR CEILING SUPPORTS IMPEDE ACCESS IN ANY WAY. INSTALL HVAC EQUIPMENT WITHIN 24" ABOVE CEILING FOR SERVICEABILITY.
8. ROUTE SHEET METAL RETURN AIR DUCT AS SHOWN WITH TERMINATION DIRECTED UPWARD. SIZE PLENUM FULL SIZE OF RETURN AIR INLET. PROVIDE DUCT LINER IN RETURN AIR DUCTWORK FOR SOUND ATTENUATION. COVER INLET WITH 1/2"X1/2" BIRD SCREEN.
9. ROUTE EXHAUST AIR DUCTWORK TO NEW ROOF MOUNTED EXHAUST FAN. COORDINATE EXACT ROUTING WITH STRUCTURE AND OTHER OBSTACLES. ADJUST ROUTING TO MATCH.
10. EXHAUST AIR DAMPERS SHALL BE ACCESSIBLE FROM BACK-OF-HOUSE LAY-IN CEILING. COORDINATE FINAL INSTALLED LOCATION SUCH THAT THE DAMPERS REMAIN ACCESSIBLE.
11. DO NOT ROUTE DUCTWORK OVER ELECTRICAL EQUIPMENT.
12. ROUTE DUCTWORK TIGHT TO STRUCTURE.
13. ROUTE DUCTWORK TIGHT TO STRUCTURE AND ABOVE THE STOCKROOM LIGHT FIXTURES.
14. ROUTE SUPPLY/RETURN DUCTWORK TO ROOF CURB PENETRATIONS. TRANSITION DUCTWORK IN RISER AS NECESSARY
15. INSTALL FABRIC DUCT DIRECTLY ABOVE ARCHITECTURAL LIGHTING GRID. REFER TO BOXED NOTES FOR ADDITIONAL INFORMATION.
16. ARROWS INDICATE DIRECTION OF AIRFLOW. PROVIDE VENTS ON FABRIC DUCT TO DIRECT AIRFLOW AS SHOWN.
17. EXTEND AND TIGHTEN HANGING CABLE TO WALL. GENERAL CONTRACTOR TO PROVIDE 2X WOOD BACKING. COORDINATE REQUIREMENTS WITH FABRIC DUCT MANUFACTURER.
18. FIELD FABRICATE L-BRACKET FOR SUPPORTING END OF FABRIC DUCT. COORDINATE REQUIREMENTS WITH FABRIC DUCT MANUFACTURER.
19. SUPPORT FABRIC DUCTWORK WITH MANUFACTURER'S DOUBLE-CABLE CROSS BRACING SUPPORTS. COORDINATE REQUIREMENTS WITH FABRIC DUCT MANUFACTURER.
20. INSTALL DAMPER AND ACTUATOR IN LOCATION INDICATED. DAMPER FURNISHED BY DIVISION 23. ACTUATOR FURNISHED BY EMS VENDOR.
21. LOUVERED DOOR FOR RELIEF AIR BY GENERAL CONTRACTOR. REFER TO ARCHITECTURAL DRAWINGS FOR MORE INFORMATION.
22. DO NOT INSTALL VENTS ON FABRIC DUCT ADJACENT TO BACKWRAP WALL. DIMENSION SHOWN FOR REFERENCE ONLY.
23. DO NOT INSTALL SENSORS ON WALL GRAPHICS. CONFIRM LOCATIONS OF SENSORS WITH PM PRIOR TO INSTALL.
24. SMOKE DETECTORS AND WIRING IN SUPPLY AND RETURN AIR DUCTS SHALL BE PROVIDED BY DIVISION 28 CONTRACTOR. SMOKE DETECTORS SHALL SHUT-DOWN UNIT UPON ALARM.
25. TRANSITION END OF FABRIC DUCT TO SHEET METAL DUCT. TRANSITION TO RECTANGULAR DUCT DIRECTLY BEFORE WALL PENETRATION. COORDINATE FABRIC DUCT LENGTH PRIOR TO ORDERING.
26.

PROVIDE RFID DUCTWORK MESH OVER TRANSFER GRILLS BELOW 15'-0" AFF BETWEEN THE STOCKROOM AND THE SALES FLOOR, IF APPLICABLE. COORDINATE REQUIREMENTS WITH CONSTRUCTION PROJECT MANAGER.

INSTALL DUCTWORK AND PIPING AS TIGHT TO STRUCTURE AS POSSIBLE. COORDINATE WITH OTHER TRADES TO AVOID CONFLICTS. COORDINATE INSTALLATION OF DUCTWORK AND PIPING TO AVOID CONFLICTS WITH ELECTRICAL PANELS, LIGHTING FIXTURES, ETC. DO NOT INSTALL DUCTWORK BELOW THE BOTTOM OF THE LIGHT FIXTURES. NOTIFY CONSTRUCTION PROJECT MANAGER OF CONFLICTS.

FABRIC DUCT GENERAL NOTES:
PROVIDE FABRIC DUCT THROUGHOUT THE SPACE AS SHOWN ON PLAN. FABRIC DUCT SHALL NOT REPLACE RECTANGULAR DUCT DROPS OR EXHAUST DUCTS. BASIS OF DESIGN SHALL BE "PRIHODA", "NM" NONPOROUS FABRIC WITH "PERFORATIONS" (AIR OPENINGS) WITH ADJUSTABLE FLOW DEVICES (I.E. AFD'S) AT OPENINGS, AND ONE ROW, GALVANIZED CABLE. INTERNAL HOOP SUPPORT SYSTEM SHALL BE PROVIDED ON ALL FABRIC DUCT UNLESS NOTED OTHERWISE. INCLUDE ALL COMPONENTS AND ACCESSORIES REQUIRED TO MAKE A COMPLETE SYSTEM AS RECOMMENDED BY PRIHODA DURING BID PHASE, INCLUDING HANGING STRAPS AND CLIPS, END-CAPS, CONNECTIONS TO METAL DUCTS, ETC. PRIHODA FABRIC DUCT SHALL BE SIZED PER FACTORY RECOMMENDATIONS TO PROVIDE MINIMUM AIRFLOWS IN BRANCH DUCTS AS SHOWN. CONFIRM FABRIC DUCT COLOR WITH ARCHITECT PRIOR TO ORDERING ON ALL PROJECTS. (FOR GLOBAL 3.0 FIXTURE PACKAGE, "PANTONE 420 - LIGHT GREY IS BASIS OF DESIGN). CONTACT PRIHODA SALES DEPARTMENT (E-MAIL: SALES@PRIHODA-NA.COM, PHONE: 1-855-774-4632) FOR PRICING INFORMATION.

FABRIC DUCT DESIGN GUIDELINE:
DISTRIBUTE AIRFLOW EVENLY ALONG FABRIC DUCT IN THE DIRECTION OF FLOW ARROWS. ORIENT AND SIZE FABRIC DUCT DIFFUSER OPENINGS TO PROVIDE A 50 FPM THROW VELOCITY HALF WAY TO THE NEAREST ADJACENT FABRIC DUCT OR TO THE NEAREST PARTITION/DEMISING WALL AS APPLICABLE. VENTS ON FABRIC DUCT SHALL BE LOCATED AT 22.5 DEGREES BELOW HORIZONTAL UNLESS NOTED OTHERWISE.

FABRIC DUCT COORDINATION NOTE:
DURING THE FIRST WEEK OF THE PROJECT, THE GENERAL CONTRACTOR'S SUPERINTENDENT, MECHANICAL SUB-CONTRACTOR, AND A REPRESENTATIVE FROM "PRIHOCA" SHALL MEET AT THE PROJECT SITE FOR CONFIRMATION OF ALL FIELD DIMENSIONS AND POTENTIAL OBSTRUCTIONS. THIS EVENT MUST PRECEDE THE ORDERING OF ANY MATERIALS FROM "PRIHODA". CHANGE ORDERS AND EXPEDITING FEES WILL NOT BE APPROVED DUE TO LACK OF ON-SITE COLLABORATION AND/OR MEASUREMENT DURING SITE MEETING AT PROJECT COMMENCEMENT.

FABRIC DUCT INSTALLATION NOTE:
INSTALL FABRIC DUCT ABOVE ARCHITECTURAL LIGHTING SYSTEM. COORDINATE FABRIC DUCT INSTALLATION WITH GENERAL CONTRACTOR AND DIVISION 26. GENERAL CONTRACTOR SHALL VERIFY FABRIC DUCT IS INSTALLED SUCH THAT IT DOES NOT CLASH WITH ARCHITECTURAL LIGHTING SYSTEM, INCLUDING LIGHT FIXTURES, ARCHITECTURAL LIGHTING SYSTEM GRID AND SUSPENSION CABLES, OR ANY OTHER SUSPENDED FIXTURES WHEN DEFLATED.

THE DUCTWORK LAYOUT INDICATED ON THE DRAWINGS IS SCHEMATIC AND SHOWS DESIGNED INTENT ONLY. PRIOR TO FABRICATION AND INSTALLATION OF DUCTWORK, DIVISION 23 SHALL HAVE A QUALIFIED, EXPERIENCED SKETCHER PREPARE AND SUBMIT SHEET METAL SHOP DRAWINGS. SHOP DRAWINGS SHALL TAKE INTO ACCOUNT ALL EXISTING CONDITIONS, INCLUDING BUT NOT LIMITED TO, STRUCTURAL MEMBERS, CONDUITS AND PIPING TO REMAIN. SHOP DRAWINGS SHALL ALSO TAKE INTO ACCOUNT ALL NEW DESIGN CONDITIONS, INCLUDING BUT NOT LIMITED TO, STRUCTURAL MEMBERS, PIPING, CEILINGS, SOFFIT HEIGHTS, AND LIGHT FIXTURES.

SHOP DRAWINGS SHALL INDICATE ALL REVISIONS TO THE LAYOUT REQUIRED TO ACCOMMODATE THE EXISTING CONDITIONS AND/OR MAINTAIN THE CEILING HEIGHTS AND CLEARANCES REQUIRED. NOTIFY THE ARCHITECT AND ENGINEER OF ANY LOCATION WHERE THE DESIGN INTENT CANNOT BE MET PRIOR TO FABRICATION AND INSTALLATION OF DUCTWORK. REVISIONS TO DUCTWORK, EQUIPMENT, CONDUIT AND/OR PIPING REQUIRED BY CONTRACTOR'S FAILURE TO SUBMIT PROPERLY PREPARED SHOP DRAWINGS SHALL BE THE RESPONSIBILITY OF DIVISION 23 AT NO ADDITIONAL COST TO THE CLIENT OR DELAY TO THE PROJECT SCHEDULE.

GENERAL CONTRACTOR IS RESPONSIBLE FOR PROVIDING TO ARCHITECT, ENGINEER, LANDLORD, AND BUILDING OFFICIAL/INSPECTOR A FINAL TEST AND BALANCE REPORT PER THE SPECIFICATIONS. PROVIDE TEST AND BALANCE REPORT TO ARCHITECT, ENGINEER, AND LANDLORD PRIOR TO THE FINAL BUILDING INSPECTION.

LANDLORD REQUIREMENTS:
LANDLORD APPROVED ROOFING CONTRACTOR SHALL BE RESPONSIBLE FOR MAKING ALL CUTS THROUGH THE EXISTING ROOF, MODIFYING EXISTING OPENINGS, AND/OR ALTERING CURB FLASHING AT GENERAL CONTRACTOR'S EXPENSE. COORDINATE WITH GENERAL CONTRACTOR.

EMS CONTROLS:
CONTRACTORS ARE RESPONSIBLE FOR COORDINATING ALL EQUIPMENT CONTROLS WITH EMS VENDOR PRIOR TO PURCHASE AND INSTALLATION. CONTRACTORS SHALL COORDINATE WITH EMS VENDOR TO PROVIDE ALL NECESSARY EQUIPMENT AND ACCESSORIES FOR A FULLY FUNCTIONING SYSTEM.

TEMPERATURE CONTROLS:
EMS VENDOR SHALL FURNISH SENSORS AND CONTROL COMPONENTS AS INDICATED ON PLANS AND AS NECESSARY TO ACCOMPLISH THE INTENT OF THE DRAWINGS. ALL CONTROLS SHALL BE TIED INTO THE EMS SYSTEM UNLESS NOTED OTHERWISE.

GENERAL CONTRACTOR SHALL INSTALL CARRIER FURNISHED TEMPORARY THERMOSTATS AND FEED THE WIRING DOWN INTO THE SPACE FOR START UP AND CONTROL OF RTU(S) UNTIL THE EMS SYSTEM IS OPERABLE. REFER TO M3.0 FOR CARRIER CONTACT INFORMATION.

DRAWING USED FOR REFERENCE ONLY AND IS NOT TO BE SUBSTITUTED FOR CURRENT MEP DRAWING

Engineer:

Project Owner:

NIKE, Inc.
One Bowerman Drive
Beaverton, OR 97005
(503) 671-6453
www.nike.com

Project Address:

NIKE FACTORY STORE
WATERFORD LAKES SHOPPING CENTER
449 N. ALAFAYA TRAIL
ORLANDO, FL 32828
TEMPLATE ISSUE DATE: 11/25/2018

Fixture Package:
UNITE

Stamp:

Issued For:
PERMIT/BID

Issue Date:
11/06/2020

Revisions:

NO.	REASON	DATE

PROJECT MANAGER:
KH
CHECKED BY:
DRAWN BY:
Author

Project Number:
62301411

Sheet Title:
MECHANICAL PLAN

Sheet Number:
BAS-M1.0

BRADLEY E. CHAMBON

ROOFTOP UNIT CONTROL MATRIX

CONTROL FEATURE	UNITS	RTU-1 SETPOINT OR Y/N	RTU-2 SETPOINT OR Y/N	RTU-3 SETPOINT OR Y/N	RTU-4 SETPOINT OR Y/N	RTU-5 SETPOINT OR Y/N	POINT TYPE INTERFACE WITH DDC (READ/WRITE)	NOTES
BUILDING AUTOMATION SYSTEM (BAS)								
ENERGY MANAGEMENT SYSTEM INTERFACE		Y	Y	Y	Y	Y	BACNET	A
SETPOINTS								
COOLING - EFFECTIVE OCCUPIED COOLING SETPOINT	°F	74	74	74	74	74	READ/WRITE	
COOLING - EFFECTIVE UNOCCUPIED COOLING SETPOINT	°F	85	85	85	85	85	READ/WRITE	
COOLING - MINIMUM COOLING SUPPLY AIR TEMPERATURE (SAT) SETPOINT	°F	50	50	50	50	50	READ/WRITE	
COOLING - LOCKOUT TEMPERATURE SETPOINT	°F	55	55	55	55	55	READ/WRITE	
DEAD BAND - MINIMUM HEATING AND COOLING TEMPERATURE SETPOINT DIFFERENCE	°F	6	6	6	6	6		
HEATING - EFFECTIVE OCCUPIED HEATING SETPOINT	°F	68	68	68	68	68	READ/WRITE	
HEATING - EFFECTIVE UNOCCUPIED HEATING SETPOINT	°F	58	58	58	58	58	READ/WRITE	
HEATING - MAXIMUM HEATING SUPPLY AIR TEMPERATURE (SAT) SETPOINT	°F	110	110	110	110	110	READ/WRITE	
HEATING - LOCKOUT TEMPERATURE SETPOINT	°F	55	55	55	55	55	READ/WRITE	
DEHUMIDIFICATION SETPOINT - HUMIDITY SENSOR FEEDBACK	% RH	55	55	55	55	55	READ/WRITE	
ECONOMIZER - HIGH OUTSIDE AIR TEMPERATURE (OAT) LOCKOUT SETPOINT	°F	75	75	75	75	75	READ/WRITE	
PROGRAMMED CONTROL FEATURES								
DEMAND CONTROL VENTILATION (DCV) HIGH ALARM SETPOINT - CO2 SENSOR FEEDBACK	PPM	750	750	750	750	N/A	READ/WRITE	
EQUIPMENT ACCESSORIES AND CONTROL MODULES								
OUTSIDE AIR DAMPER - MOTOR OPERATED (MODULATING)		Y	Y	Y	Y	Y	READ/WRITE	M
INTEGRATED ECONOMIZER - DIFFERENTIAL DRY BULB AND DIFFERENTIAL ENTHALPHY		Y	Y	Y	Y	Y	READ/WRITE	G,H
ECONOMIZER FAULT DETECTION AND DIAGNOSTICS (FDD) SYSTEM		Y	Y	Y	Y	Y	READ	O
RELIEF - BAROMETRIC DAMPER		Y	Y	N	N	N		
RELIEF - CONSTANT VOLUME POWERED EXHAUST FAN		N	N	Y	Y	Y	READ STATUS	N,O
COOLING COIL (DX - STAGED)		Y	Y	Y	Y	Y	READ STATUS	E,F
DEHUMIDIFICATION - HOT GAS REHEAT		Y	Y	Y	Y	Y	READ STATUS	L
HEATING COIL (NATURAL GAS)		Y	Y	Y	Y	Y	READ STATUS	J,K
SUPPLY FAN CONTROL METHOD								
ON DURING OCCUPIED HOURS		Y	Y	Y	Y	Y		B
UNIT START AND FAN OFF DELAY		Y	Y	Y	Y	Y		B
OPTIMUM START SEQUENCE		Y	Y	Y	Y	Y		O
VARIABLE VOLUME - 2-SPEED FAN CONTROL		N	N	Y	Y	Y	READ STATUS	C
SAFETIES, INTERLOCKS, AND ALARMS								
SUPPLY AIR SMOKE DETECTOR - FIRE SAFETY SHUTDOWN		Y	Y	Y	Y	Y	READ	D
RETURN AIR SMOKE DETECTOR - FIRE SAFETY SHUTDOWN		Y	Y	Y	Y	Y	READ	D
SAFETY CHAIN - SAFETY SHUTDOWN		Y	Y	Y	Y	Y	READ	D
SAT ALARM - SAFETY SHUTDOWN		Y	Y	Y	Y	Y	READ	D
SPT ALARM - SAFETY SHUTDOWN		Y	Y	Y	Y	Y	READ	D
GAS VALVE SAFETY		Y	Y	Y	Y	Y	READ	O

EMS VENDOR SHALL PROVIDE CONTROL PANEL, RELAYS, THERMOSTATS, TEMPERATURE SENSORS, HUMIDTY SENSORS, AND/OR CO2 SENSORS WHERE SHOWN ON THE DRAWINGS AND AS REQUIRED TO FACILITATE THE SCHEDULED SEQUENCE OF OPERATION. EACH UNIT SHALL CONTROL BASED ON ITS OWN INTERNAL SAFETIES, TIME DELAYS, AND SEQUENCES UNLESS NOTED OTHERWISE. COORDINATE WITH OWNER FINAL BUILDING AND EQUIPMENT SCHEDULES DURING STARTUP.

NOTES:

A. EMS SHALL PROVIDE REMOTE SETPOINT ADJUSTMENT, SCHEDULING, AND MONITORING OF THE POINTS LISTED IN THE SCHEDULE FOR EACH UNIT. THE RTU SHALL BE SCHEDULED WITH A MINIMUM OF AN OCCUPIED AND UNOCCUPIED SCHEDULE. ADDITIONAL UNIT SCHEDULES SHALL BE AVAILABLE FOR REMOTE IMPLEMENTATION IF REQUIRED.

B. THE SUPPLY FAN SHALL RUN CONTINUOUSLY IN OCCUPIED MODE AND SHALL CYCLE ON AND OFF IN UNOCCUPIED MODE. A UNIT START DELAY IS USED WHEN TRANSITIONING FROM UNOCCUPIED TO OCCUPIED. FAN OFF DELAY ALLOWS THE SUPPLY FAN TO CONTINUE TO OPERATE AFTER HEATING AND COOLING STOPS.

C. VIA FACTORY VFD, THE CARRIER RTU OPEN BOARD SHALL DETERMINE FAN SPEED REQUIRED FOR HEATING AND COOLING. FACTORY VFD SHALL CONTROL TO 2 FAN SPEEDS. LOW SPEED SHALL NOT EXCEED 66% OF FULL SPEED AND SHALL DRAW NO MORE THAN 40% OF FAN POWER AT FULL SPEED. DURING FAN ONLY OR SINGLE STAGE COOLING, SUPPLY FAN SHALL OPERATE AT LOW SPEED. DURING HEATING, SECOND STAGE COOLING, DEHUMIDIFICATION OR FULL ECONOMIZER OPERATION, FAN SHALL OPERATE AT HIGH SPEED.

D. IF A LOCAL UNIT CONTROL ALARM IS ACTIVE, THE SUPPLY FAN TURNS OFF IMMEDIATELY REGARLESS OF OCCUPANY STATE OR DEMAND.

E. COOLING STAGES ARE CONTROLLED BY THE CARRIER RTU OPEN COOLING CONTROL PID LOOP AND COOLING STAGES CAPACITY ALGORITHM. THEY CALCULATE THE REQUIRED NUMBER OF STAGES NEEDED TO SATISFY THE SPACE BY COMPARING THE SPACE TEMPERATURE TO THE EFFECTIVE OCCUPIED COOLING SETPOINT IN OCCUPIED MODE AND THE EFFECTIVE UNOCCUPIED COOLING SETPOINT IN UNOCCUPIED MODE. THE FOLLOWING CONDITIONS MUST BE TRUE FOR THE COOLING ALGORITHM TO OPERATE:
- THE OUTDOOR AIR TEMPERATURE IS GREATER THAN THE COOLING LOCKOUT TEMPERATURE SETPOINT.
- THE SUPPLY FAN HAS BEEN ON FOR AT LEAST 30 SECONDS.
- THE UNIT HAS A VALID SUPPLY AIR TEMPERATURE INPUT.
- THE UNIT HAS A VALID SPACE TEMPERATURE INPUT.
- HEATING MODE IS NOT ACTIVE AND THE TIME GUARD BETWEEN MODES HAS EXPIRED.
- ECONOMIZER IS UNAVAILABLE OR ECONOMIZER IS ACTIVE AND THE FOLLOWING ARE TRUE: (1) ECONOMIZER IS GREATER THAN 85% OPEN, (2) SUPPLY AIR TEMPERATURE IS GREATER THAN 5 DEGREES ABOVE THE MINIMUM COOLING SAT SETPOINT, AND (3) SPACE TEMPERATURE IS GREATER THAN 0.5 DEGREES ABOVE THE EFFECTIVE OCCUPIED TEMPERATURE SETPOINT.

WHEN THE COOLING ALGORITHM PRECONDITIONS ARE MET, THE COMPRESSORS ARE ENERGIZED IN STAGES, AS APPLICABLE. ANTI-RECYCLE TIMERS ARE EMPLOYED TO PROTECT THE EQUIPMENT FROM SHORT-CYCLING. THERE ARE FIXED THREE-MINUTE MINIMUM ON-TIMES AND FIVE-MINUTE OFF-TIMES FOR EACH COMPRESSOR OUTPUT.

F. DURING COMPRESSOR OPERATION, THE RTU OPEN CONTROL LOGIC MAY REDUCE THE NUMBER OF ACTIVE STAGES IF THE SUPPLY AIR TEMPERATURE FALLS BELOW THE MINIMUM COOLING SAT SETPOINT. A COMPRESSOR STAGED OFF IN THIS FASHION MAY BE STARTED AGAIN AFTER THE NORMAL TIME-GUARD PERIOD HAS EXPIRED IF THE SUPPLY AIR TEMPERATURE HAS INCREASED ABOVE THE MINIMUM COOLING SAT SETPOINT.

G. THE SYSTEM SHALL UTILIZE THE FACTORY MODULATING ECONOMIZER FOR FREE COOLING WHEN OUTDOOR AIR CONDITIONS ARE SUITABLE. FOR THE ECONOMIZER TO OPERATE DURING OCCUPIED HOURS, THE FOLLOWING CONDITIONS MUST BE TRUE:
-OUTDOOR AIR TEMPERATURE IS LESS THAN THE SPACE TEMPERATURE AND LESS THAN THE ECONOMIZER HIGH OAT LOCKOUT SETPOINT.
-THE INDOOR FAN HAS BEEN ON FOR AT LEAST 30 SECONDS.
-THE UNIT HAS A VALID SUPPLY AIR TEMPERATURE INPUT.
-THE UNIT HAS A VALID SPACE TEMPERATURE INPUT.
-OUTDOOR AIR ENTHALPY IS LESS THAN THE SPACE ENTHALPY. (ENTHALPY STATUS SHALL READ "LOW".)

IF ANY OF THE PRECEDING CONDITIONS ARE NOT TRUE AND THE SUPPLY FAN IS ON HIGH SPEED, THE ECONOMIZER SHALL BE SET TO THE DCV MINIMUM OUTDOOR AIR DAMPER POSITION (TBD BY TAB CONTRACTOR). IF ANY OF THE PRECEDING CONDITIONS ARE NOT TRUE AND THE SUPPLY FAN IS ON LOW SPEED, THE ECONOMIZER SHALL BE SET TO THE LOW FAN ECONOMIZER MINIMUM DAMPER POSITION (TBD BY TAB CONTRACTOR). IF ALL OF THE PRECEDING CONDITIONS ARE TRUE, THE ECONOMIZER PID LOOP SHALL MODULATE THE DAMPER. THE ECONOMIZER POSITION SHALL BE REDUCED AS THE SUPPLY AIR TEMPERATURE FALLS TO WITHIN 5 DEGREES OF THE MINIMUM COOLING SAT SETPOINT, BUT SHALL NEVER CLOSE BELOW THE DCV MINIMUM OUTDOOR AIR DAMPER POSITION.

H. DURING UNOCCUPIED HOURS, UNOCCUPIED FREE COOLING SHALL BE ENABLED. THE ECONOMIZER SHALL REMAIN CLOSED UNLESS THE FOLLOWING CONDITIONS ARE TRUE:
-OUTDOOR AIR TEMPERATURE IS BELOW THE ECONOMIZER HIGH OAT LOCKOUT SETPOINT.
-OUTDOOR AIR TEMPERATURE IS LESS THAN THE SPACE TEMPERATURE
-OUTDOOR AIR ENTHALPY IS LESS THAN THE SPACE ENTHALPY. (ENTHALPY STATUS SHALL READ "LOW".)

IF ALL OF THE PRECEDING CONDITIONS ARE TRUE AND THE SPACE TEMPERATURE RISES 1 DEGREE ABOVE THE EFFECTIVE UNOCCUPIED COOLING SETPOINT, THE SUPPLY FAN SHALL START AND THE ECONOMIZER DAMPER SHALL OPEN AS NECESSARY TO COOL THE SPACE. THE DAMPER SHALL REMAIN OPEN UNTIL THE SPACE IS SATISFIED OR THE PRECEDING CONDITIONS ARE NO LONGER TRUE. IF ANY OF THE PRECEDING CONDITIONS ARE NOT TRUE, THE ECONOMIZER SHALL CLOSE COMPLETELY.

J. HEATING STAGES ARE CONTROLLED BY THE CARRIER RTU OPEN HEATING CONTROL PID LOOP AND HEATING STAGES CAPACITY ALGORITHM. THEY CALCULATE THE REQUIRED NUMBER OF STAGES NEEDED TO SATISFY THE SPACE BY COMPARING THE SPACE TEMPERATURE TO THE EFFECTIVE OCCUPIED HEATING SETPOINT IN OCCUPIED MODE AND THE EFFECTIVE UNOCCUPIED HEATING SETPOINT IN UNOCCUPIED MODE. THE FOLLOWING CONDITIONS MUST BE TRUE FOR THE HEATING ALGORITHM TO OPERATE:
-OUTDOOR AIR TEMPERATURE IS LESS THAN THE HEATING LOCKOUT TEMPERATURE SETPOINT.
-THE SUPPLY FAN HAS BEEN ON FOR AT LEAST 30 SECONDS.
-THE UNIT HAS A VALID SUPPLY AIR TEMPERATURE INPUT.
-THE UNIT HAS A VALID SPACE TEMPERATURE INPUT.
-COOLING MODE AND ECONOMIZER ARE NOT ACTIVE AND THE TIME GUARD BETWEEN MODES HAS EXPIRED.

WHEN THE HEATING ALGORITHM PRECONDITIONS ARE MET, THE HEAT IS ENERGIZED IN STAGES, AS APPLICABLE. ANTI-RECYCLE TIMERS ARE EMPLOYED TO PROTECT THE EQUIPMENT FROM SHORT-CYCLING. THERE ARE FIXED ONE-MINUTE MINIMUM ON AND OFF TIMES FOR EACH HEATING OUTPUT.

K. DURING HEATING OPERATION, THE RTU OPEN CONTROL LOGIC MAY REDUCE THE NUMBER OF ACTIVE STAGES IF THE SUPPLY AIR TEMPERATURE EXCEEDS THE MAXIMUM HEATING SAT SETPOINT. A HEAT STAGE TURNED OFF IN THIS FASHION MAY BE STARTED AGAIN AFTER THE NORMAL TIME-GUARD PERIOD HAS EXPIRED IF THE SUPPLY AIR TEMPERATURE HAS DECREASED BELOW THE MAXIMUM HEATING SAT SETPOINT.

L. THE SYSTEM SHALL UTILIZE HUMIDITY SENSORS IN THE SALES AREA, STOCKROOM, AND EMPLOYEE LOUNGE. DEHUMIDIFICATION IS CONTROLLED BY THE HUMIDI-MIZER ADAPTIVE DEHUMIDIFICATION SYSTEM. DURING OCCUPIED AND UNOCCUPIED MODE, THE FOLLOWING CONDITIONS MUST BE TRUE FOR THE HUMIDI-MIZER SYSTEM TO OPERATE:
-OUTDOOR AIR TEMPERATURE IS LESS THAN THE SPACE TEMPERATURE.
-THE INDOOR FAN HAS BEEN ON FOR AT LEAST 30 SECONDS.
- THE UNIT HAS A VALID SUPPLY AIR TEMPERATURE INPUT.
- THE UNIT HAS A VALID SPACE TEMPERATURE INPUT.
- THE UNIT HAS A VALID SPACE RELATIVE HUMIDITY SENSOR INPUT.
- HEAT MODE IS NOT ACTIVE AND THE TIME GUARD BETWEEN MODES HAS EXPIRED.

IF ALL OF THE PRECEDING CONDITIONS ARE TRUE AND ANY ZONE RISES ABOVE THE DEHUMIDIFICATION SETPOINT, THE RTU OPEN SHALL ENABLE DEHUMIDIFICATION MODE AND ENERGIZE THE HUMIDI-MIZER OUTPUT FOR ALL UNITS SERVING THAT ZONE. DEHUMIDIFICATION MODE SHALL CONTINUE UNTIL THE SPACE RELATIVE HUMIDITY DROPS BELOW THE DEHUMIDIFICATION SETPOINT BY A 5% FIXED HYSTERESIS.

M. THE SYSTEM SHALL UTILIZE A CO2 SENSOR FOR THE SALES AREA, FITTING ROOM, STOCKROOM AND EACH OFFICE (HIGHEST READING WILL BE TAKEN FOR OFFICE DCV CONTROL). DCV IS CONTROLLED BY THE INDOOR AIR CO2 ALGORITHM. THE ALGORITHM CALCULATES THE CO2 MINIMUM DAMPER POSITION USING A PID LOOP. THE CALCULATED CO2 MINIMUM DAMPER POSITION IS THEN COMPARED AGAINST THE DCV MINIMUM POSITION SETPOINT AND THE GREATEST VALUE BECOMES THE FINAL MINIMUM DAMPER POSITION. DURING OCCUPIED HOURS, THE INDOOR AIR CO2 SEQUENCE SHALL BE ENABLED. THE FOLLOWING CONDITIONS MUST BE TRUE FOR THE INDOOR AIR CO2 ALGORITHM TO OPERATE:
-THE SUPPLY FAN HAS BEEN ON FOR AT LEAST 30 SECONDS.
-THE UNIT HAS A VALID CO2 SENSOR READING.

IF ALL OF THE PRECEDING CONDITIONS ARE TRUE, THE FACTORY OUTDOOR AIR DAMPER SHALL MODULATE BETWEEN ITS MINIMUM (ABS. MIN. O/A) AND MAXIMUM (MIN. O/A CFM) POSITION (TBD BY TAB CONTRACTOR). THE SYSTEM SHALL START TO MODULATE THE DAMPER OPEN WHEN CO2 LEVEL RISES TO 100 PPM (ADJUSTABLE) ABOVE AMBIENT CO2 LEVEL (400 PPM) AND SHALL CONTINUE TO OPEN TO ITS MAXIMUM POSITION AS CO2 LEVEL RISES TO AND ABOVE THE DCV HIGH ALARM SETPOINT. AS THE CO2 LEVEL DROPS, THE DAMPER SHALL START TO MODULATE TO ITS MINIMUM POSITION. DURING UNOCCUPIED HOURS, THE INDOOR AIR CO2 SEQUENCE SHALL BE DISABLED.

N. POWERED EXHAUST FAN SHALL STAGE ON AND OFF ACCORDING TO DAMPER POSITION.

O. DEVICE SHALL BE FACTORY MOUNTED AND PRE-WIRED FOR OPERATION SUBJECT TO THE RTU OPEN CONTROLLER.

SEQUENCE OF OPERATION

A. ROOFTOP UNIT CONTROL (RTU-1,2,3,4,5)

Refer to Rooftop Unit Control Matrix for sequence of operations.

B. VAV DIFFUSER CONTROL (CSD1)

In occupied mode, the VAV diffuser shall modulate airflow to maintain the room temperature setpoint (adjustable). Set VAV diffuser minimum position to maintain 30% of the maximum airflow.

The room occupancy sensor, upon sensing the space to be vacant for 15 minutes (adjustable), shall signal the diffuser through the EMS to maintain an unoccupied temperature setpoint (adjustable). When occupancy is detected, the EMS shall direct the diffuser to control to the room temperature setpoint.

The room CO2 sensor, upon reading a CO2 level above 100 PPM (adjustable) above ambient CO2 level (400 PPM), shall signal the diffuser through the EMS to modulate the zone damper between its minimum and maximum position. The system shall start to modulate the damper open when CO2 level rises 100 PPM above ambient CO2 level and continue to open to its maximum position as CO2 level rises to and above 700 PPM (adjustable) above ambient CO2 levels. As the CO2 level drops, the system shall start to modulate the dampers to the minimum position.

In unoccupied mode, VAV diffuser control shall be disabled unless occupancy is detected. When occupancy is detected, the EMS shall direct the diffuser to control at the room temperature setpoint.

C. MOTORIZED DAMPER CONTROL (MD)

When RTU-2 is in heating mode, the motorized damper shall be closed.

When RTU-2 is in cooling mode and the supply air temperature drops below 65 degrees Fahrenheit (adjustable), the motorized damper shall open.

A damper end switch shall prove if the motorized damper is open when called. If failure to open occurs, an alarm shall be generated to the EMS.

D. A/V ROOM EXHAUST FAN CONTROL (EF-1)

The exhaust fan shall be enabled when the space temperature rises 1 degree above the cooling setpoint (75 degrees Fahrenheit, adjustable) and shall continue to operate until the space temperature drops to 1 degree below the cooling setpoint.

E. RESTROOM EXHAUST FAN CONTROL (EF-2)

In occupied mode, the exhaust fan shall be enabled and the motorized damper shall open.

In unoccupied hours, the exhaust fan shall be disabled and the motorized damper shall be closed.

A damper end switch shall prove if the motorized damper is open when called. If failure to open occurs, the fan shall not be enabled and an alarm shall be generated to the EMS.

CARRIER UNIT STARTUP REQUIREMENTS

INSTALLING CONTRACTOR SHALL COMPLETE THE PRE-START CHECKLIST AND EMAIL DENNY.LAWRENCE@COMFORTSYSTEMSUSA.COM TWO WEEKS PRIOR TO SCHEDULING EQUIPMENT STARTUP.

COORDINATE EQUIPMENT STARTUP WORK WITH COMFORT SYSTEMS USA
EMAIL: DENNY.LAWRENCE@COMFORTSYSTEMSUSA.COM
OFFICE: (317) 246-4644

DEPARTMENT MANAGER
EMAIL: KLORI.KARAMDAD@COMFORTSYSTEMSUSA.COM
OFFICE: 317-246-4656

TECHNICAL SUPPORT
EMAIL: RICK.FARRIS@COMFORTSYSTEMSUSA.COM
MOBILE: 317-638-5363 X4454

PRE-START CHECKLIST (VERIFY FOR ALL UNITS)
- ☐ VERIFY ALL ITEMS ON THE EQUIPMENT ORDER RECEIVED.
- ☐ VERIFY ALL PACKAGING MATERIAL REMOVED FROM THE UNIT.
- ☐ VERIFY CURB GASKETS PROPERLY INSTALLED.
- ☐ VERIFY ROOFTOP UNIT INSTALLED LEVEL AND PROPERLY ALIGNED WITH CURB.
- ☐ VERIFY DUCTWORK/FABRIC DUCT COMPLETELY INSTALLED PER MECHANICAL PLANS.
- ☐ VERIFY OA HOOD INSTALLED. AIR INLET SCREEN INSTALLED.
- ☐ VERIFY POWER EXHAUST ACCESSORY INSTALLED. (IF APPLICABLE)
- ☐ VERIFY CLEAN PLEATED FILTERS INSTALLED, MINIMUM MERV 8 RATING.
- ☐ VERIFY CONDENSATE DRAIN LINE INSTALLED. MINIMUM 2" DEEP TRAP. DRAIN PAN CHECK/LEVEL.
- ☐ VERIFY SUPPLY FAN ROTATES FREELY IN THE HOUSING.
- ☐ VERIFY PULLEYS ALIGNED AND BELT TENSION CORRECT.
- ☐ VERIFY SMOKE DETECTORS INSTALLED IN DUCTWORK, CLEANED AND TESTED.
- ☐ VERIFY GAS METER INSTALLED AND GAS AVAILABLE FROM THE UTILITY. GAS PIPING COMPLETED, CHECKED FOR LEAKS AND PURGED (IF APPLICABLE).
- ☐ VERIFY GAS PIPING DRIP LEG INSTALLED PROPERLY. (DOWNSTREAM OF SHUTOFF VALVE AND NO INTERFERENCE WITH ACCESS DOOR)
- ☐ VERIFY FLUE HOOD INSTALLED.
- ☐ VERIFY JOBSITE POWER SUPPLY MATCHES THE VOLTAGE ON THE UNIT DATA PLATE.
- ☐ VERIFY ELECTRIC POWER CONNECTED TO UNIT VIA THE ACCESS PROVIDED. IF NOT, DATE POWER WILL BE AVAILABLE ____________
- ☐ VERIFY NO WIRES TOUCHING REFRIGERANT LINES OR SHARP EDGES.
- ☐ VERIFY ELECTRIC CONNECTORS AND TERMINALS TIGHT.
- ☐ VERIFY THRU-THE-CURB UTILITY CONNECTIONS COMPLETE.
- ☐ VERIFY UNIT TRANSFORMER PRIMARY TAPPED FOR JOBSITE VOLTAGE.
- ☐ VERIFY VENSTAR THERMOSTAT INSTALLED IN THE RETURN AIR DUCT DROP AND WIRED FOR TEMPORARY UNIT OPERATION.

FAN SCHEDULE

MARK	SERVICE DESCRIPTION	MANUFACTURER	MOUNTING	MODEL	ROOF OPENING	CFM	ESP (IN)	NOM HP	FAN RPM	DRIVE (BELT/DIRECT)	ELECTRICAL V/PH	WEIGHT (LBS)	NOTES
EF-1	TRANSFER	GREENHECK	INLINE	SQ-100-VG	N/A	1000	0.5	1/4	1513	DIRECT	120/1	45	B,C,D,E,F,G
EF-2	EXHAUST	GREENHECK	ROOF	G-080-VG	12.5x12.5	275	0.5	1/10	1617	DIRECT	120/1	30	A,B,D,E,F,H

MODEL NUMBERS SHALL NOT BE CONSIDERED COMPLETE AND MATERIAL SHALL NOT BE ORDERED BY MANUFACTURER AND MODEL NUMBERS ONLY. REVIEW THE COMPLETE DESCRIPTION, NOTES AND SPECIFICATIONS TO DETERMINE THE EXACT MATERIAL AND ACCESSORIES TO BE ORDERED. THE MANUFACTURERS LISTED ARE THE BASIS FOR THE DESIGN.

NOTES:

A. PROVIDE INSULATED ROOF CURB WITH MINIMUM HEIGHT REQUIRED TO MAINTAIN BOTTOM OF EQUIPMENT A MINIMUM OF 8 INCHES ABOVE FINISHED ROOF SURFACE. PROVIDE SLOPED CURB IF NEEDED TO MATCH ROOF SLOPE. COORDINATE WITH ROOF INSULATION THICKNESS AND ROOF TAPER AT INSTALLED LOCATION. COORDINATE CURB TYPE WITH DRAWINGS.
B. PROVIDE BIRDSCREEN AND INTEGRAL MOTORIZED DAMPER. COORDINATE REQUIREMENTS WITH EMS VENDOR PRIOR TO PURCHASE.
C. PROVIDE RUBBER IN SHEAR ISOLATION AND ALL-THREAD HANGING RODS.
D. PROVIDE FACTORY MOUNTED DISCONNECT SWITCH.
E. PROVIDE WITH MANUFACTURER'S ELECTRONICALLY COMMUTATED (EC) MOTOR.
F. NOMINAL MOTOR HP SHALL BE NO LARGER THAN THE FIRST AVAILABLE NOMINAL MOTOR SIZE GREATER THAN THE BHP.
G. INTERLOCK FAN WITH SPACE MOUNTED TEMPERATURE SENSOR. 24V RELAY FURNISHED BY EMS VENDOR.
H. INTERLOCK FAN WITH ENERGY MANAGEMENT SYSTEM (EMS). 24V RELAY FURNISHED BY EMS VENDOR.

GRILLE, REGISTER AND DIFFUSER SCHEDULE

MARK	MANUFACTURER	SERVICE	MODEL	CONSTRUCTION TYPE	FACE TYPE	MOUNTING LOCATION	BORDER TYPE	FACE SIZE (IN)	MAX. NC	MAX. PRESS. DROP (IN. W.C.)	NOTES
CEG1	TITUS	EXHAUST	OMNI	STEEL	PLAQUE	CEILING	--	12x12	25	0.1	B, C, E, F, H
CRG1	TITUS	RETURN	PAR	STEEL	PERFORATED	CEILING	--	24x24	25	0.1	B, C, F
CRG2	TITUS	RETURN	PAR	STEEL	PERFORATED	CEILING	--	12x24	25	0.1	B, C, F
CSD1	PRICE	SUPPLY	PRODIGY	STEEL	PLAQUE	CEILING	--	24x24	25	0.1	A, B, C, F, J
CSD2	TITUS	SUPPLY	OMNI	STEEL	PLAQUE	CEILING	--	24x24	25	0.1	A, B, C, E, F
CSD3	TITUS	SUPPLY	OMNI	STEEL	PLAQUE	CEILING	--	12x12	25	0.1	A, B, C, E, F, H
CSD4	TITUS	SUPPLY	R-OMNI	STEEL	PLAQUE	CEILING	--	18"Ø	25	0.1	B, C, F, H
WTG1	TITUS	TRANSFER	350RL	STEEL	LOUVERED	WALL	--	REFER TO PLANS	25	0.1	B, C, D, F, G, K

MODEL NUMBERS SHALL NOT BE CONSIDERED COMPLETE AND MATERIAL SHALL NOT BE ORDERED BY MANUFACTURER AND MODEL NUMBERS ONLY. REVIEW THE COMPLETE DESCRIPTION, NOTES AND SPECIFICATIONS TO DETERMINE THE EXACT MATERIAL AND ACCESSORIES TO BE ORDERED. THE MANUFACTURERS LISTED ARE THE BASIS FOR THE DESIGN.

NOTES:

A. 4-WAY THROW PATTERN UNLESS OTHERWISE INDICATED BY FLOW ARROWS ON DRAWINGS.
B. NECK SIZE SHOWN ON DRAWINGS. PROVIDE BRANCH DUCT TO MATCH NECK SIZE UNLESS OTHERWISE SHOWN ON DRAWINGS.
C. BAKED ENAMEL FINISH, COLOR TO MATCH WALL, DUCT, AND/OR CEILING COLOR. COORDINATE WITH ARCHITECT PRIOR TO ORDERING.
D. FRONT BLADES PARALLEL TO LONG DIMENSION.
E. PROVIDE WITH RAPID MOUNT FRAMING OPTION FOR LAY-IN TYPE DIFFUSERS INSTALLED IN A HARD CEILING.
F. FRAME TYPE TO MATCH CEILING//WALL CONSTRUCTION, COORDINATE WITH ARCHITECTURAL REFLECTED CEILING/WALL PLAN.
G. PROVIDE DIFFUSERS AND GRILLES WITH NO EXPOSED MOUNTING SCREWS.
H. CONTRACTOR SHALL PROVIDE REMOTE CABLE-OPERATED VOLUME DAMPER BY METROPOLITAN AIR TECHNOLOGIES MODEL RT-250 WITH EXTERNAL WORM GEAR OPERATOR OR EQUIVALENT YOUNG REGULATOR BUTTERFLY DAMPER WITH 270-275 CONTROLLER. OPERATOR SHALL HAVE A SQUARE DRIVE FOR 1/4" NUT DRIVER. DAMPER ASSEMBLY SHALL INCLUDE GALVANIZED STEEL DUCT WITH ROLLED BEAD STIFFENERS, REINFORCED BLADE, LUBRICATING SELF BEARING AND WORM GEAR MOUNTING PLATE. DAMPER SHALL BE INSTALLED IN BRANCH DUCT NOT INLET OF PLENUM DIFFUSER.
J. INTERLOCK VARIABLE AIR VOLUME DIFFUSER WITH SPACE MOUNTED THERMOSTAT AND EMS. MAXIMUM AIRFLOW SHALL BE AS NOTED ON PLANS. MINIMUM AIRFLOW SHALL BE 30% OF MAXIMUM AIRFLOW. DIFFUSERS, PRESSURE RELIEF COLLAR, THERMOSTAT, POWER MODULE, POWER CABLE AND CABLE COUPLER FURNISHED BY EMS VENDOR AND INSTALLED BY CONTRACTOR.
K. INSTALL WALL TRANSFER TRILLES WITH BLADES DIRECTED UPWARD FOR VISIBILITY.

PROJECT DESIGN CONDITIONS

CLIMATE CONDITONS

WEATHER STATION:		ORLANDO EXECUTIVE, FL, USA					
CLIMATE ZONE:		2A					
HEATING (DB):	99.6%	38.9	°F				
DESIGN HEATING CONDITIONS (DB):		29.6	°F				
HUMIDIFICATION (DP/ HR/ MCDB):	99.6%	19.4	°F/	14.7	gr/lb	46.4	°F
COOLING (DB/MCWB):	0.4%	93.5	°F/	76.1	°F/		
DESIGN COOLING CONDITIONS (DB/ MCWB):		82.4	°F/	79.4	°F/		
DEHUMIDIFICATION (DP/ HR/ MCDB):	0.4%	78.4	°F/	148.3	gr/lb	82.4	°F

BUILDING OPERATING HOURS:

MONDAY - FRIDAY	TBD BY OWNER
SATURDAY	TBD BY OWNER
SUNDAY	TBD BY OWNER
HOLIDAY	TBD BY OWNER

SPACE / UNIT DESCRIPTION	SET POINTS											SPACE OPERATING HOURS OCCUPIED / UNOCCUPIED			NOTES
	COOLING / DE-HUMIDIFICATION				HEATING		HUMIDIFICATION		ZONE VENTILATION RESET						
	OCC °F	UNOCC °F	MAX RH %	MIN RH %	OCC °F	UNOCC °F	MIN RH %	MAX RH %	CONTROL METHOD	BASE PPM	MAXIMUM PPM	M-F	SAT	SUN	
RTU-1 BOH	72	80	60%	NA	70	60	NA	NA	CO2	400	1000	TBD	TBD	TBD	A-D
RTU-2 STOCK	72	80	60%	NA	70	60	NA	NA	CO2	400	1000	TBD	TBD	TBD	A-D
RTU-3 SALES	72	80	60%	NA	70	60	NA	NA	CO2	400	1000	TBD	TBD	TBD	A-D
RTU-4 SALES	72	80	60%	NA	70	60	NA	NA	CO2	400	1000	TBD	TBD	TBD	A-D
RTU-5 SOLAR	75	85	60%	NA	67	60	NA	NA	NA	NA	NA	TBD	TBD	TBD	A-C

NOTES:

A. ZONE LEVEL SET POINT CONDITIONS SHALL BE AS SCHEDULED UNLESS OTHERWISE SCHEDULED OR NOTED ON THE DRAWINGS FOR ROOM SPECIFIC SPACE CONDITIONS.
B. ZONE LEVEL OCCUPANCY HOUR SCHEDULE SHALL BE PER BUILDING OPERATING HOURS UNLESS OTHERWISE SCHEDULED.
C. ZONE LEVEL CONTROLS SHALL BE CAPABLE OF OPERATING WITH INDEPENDENT OCCUPANCY SCHEDULES.
D. ZONE LEVEL VENTILATION RESET / DEMAND CONTROL VENTILATION (DCV) CONTROL METHOD: CARBON DIOXIDE SENSOR (CO2).

ROOFTOP UNIT SCHEDULE (DX COOLING, NATURAL GAS HEAT)

MARK	MANUFACTURER	MODEL	NOMINAL TONS	SUPPLY FAN			COOLING COIL									MIN NO STAGES	HEAT EXCHANGER					MIN NO STAGES	MIN O/A CFM	ABS MIN O/A	ELECTRICAL			WEIGHT (LBS)	NOTES
				CFM	ESP (IN)	BHP	TH (MBH)	SH (MBH)	EAT (°F DB)	EAT (°F WB)	LAT (°F DB)	LAT (°F WB)	REFR TYPE	MIN EFF (EER)	MIN EFF (IEER)		MIN OUT (MBH)	NOM INPUT (MBH)	MIN EFF (%)	EAT (°F DB)	LAT (°F DB)				V/PH	MCA	MOCP		
RTU-1	CARRIER	48GCDN04	3	1,000	0.8	0.39	27.95	19.15	74.87	65.66	57.48	56.74	R-410A	-	16	2	56	72	82	65	85	2	125	75	480/3	10	15	587	A-Z
RTU-2	CARRIER	48GCDN05	4	1,500	0.6	0.79	46.04	35.64	74.87	63.03	53.22	52.45	R-410A	-	16	2	56	72	82	66	85	2	150	150	480/3	11	15	629	A-Z
RTU-3	CARRIER	48HCDE14	12.5	4,075	0.8	1.86	437.13	50.24	75.62	68.23	64.46	58.02	R-410A	12.2	13.9	2	150	120	80	50.2	85	2	1225	600	480/3	28	30	1840	A-W
RTU-4	CARRIER	48HCDE11	10	3,500	0.8	2.51	109.76	40.5	75.46	67.85	64.97	58.32	R-410A	12	14.3	2	180	148	82	50.2	85	2	975	500	480/3	27	30	1424	A-W
RTU-5	CARRIER	48HCDE11	10	4,800	0.6	4.48	105.44	105.44	72	59.5	51.93	51.56	R-410A	12	14.3	2	180	148	82	70	85	2	0	0	480/3	28	30	1424	A-T, W, Y

MODEL NUMBERS AND NOMINAL TONS LISTED SHALL NOT BE CONSIDERED COMPLETE AND MATERIAL SHALL NOT BE ORDERED BY MANUFACTURER, MODEL NUMBERS, OR NOMINAL TONS ONLY. REVIEW THE COMPLETE DESCRIPTION, NOTES AND SPECIFICATIONS TO DETERMINE THE EXACT MATERIAL AND ACCESSORIES TO BE ORDERED. THE MANUFACTURERS LISTED ARE THE BASIS FOR THE DESIGN.

NOTES:

A. REFER TO ROOFTOP UNIT CONTROL MATRIX FOR CONTROL FEATURES, MODULES, AND ACCESSORIES THAT SHALL BE PROVIDED WITH THE EQUIPMENT.
B. EQUIPMENT SIZED FOR 100°F AMBIENT TEMPERATURE.
C. PROVIDE 2 INCH MERV 13, EFFICIENT PLEATED THROWAWAY AIR FILTERS.
D. PROVIDE FACTORY MOUNTED DISCONNECT INSTALLED ON SERVICE SIDE OF UNIT.
E. STARTERS FOR ALL MOTORS SHALL BE FURNISHED INTEGRAL WITH UNIT.
F. PROVIDE SINGLE POINT POWER CONNECTION.
G. COORDINATE SIZE OF CONDUCTOR TERMINATION LUGS WITH CONDUCTOR SIZES SHOWN ON ELECTRICAL DRAWINGS.
H. PROVIDE 125 VAC, 20 AMP DUPLEX CONVENIENCE RECEPTACLE MOUNTED TO UNIT READY FOR FIELD WIRING WITH A COVER UL LISTED FOR WET AND DAMPER LOCATIONS WHEN IN USE.
L. SPECIFIED FAN ESP ACCOUNTS FOR DUCT LOSSES EXTERNAL TO UNIT.
M. PROVIDE MOTOR HORSEPOWER TO OVERCOME INTERNAL UNIT STATIC PRESSURE DROP PLUS SPECIFIED EXTERNAL STATIC PRESSURE DROP. NOMINAL MOTOR HP SHALL BE NO LARGER THAN THE FIRST AVAILABLE NOMINAL MOTOR SIZE GREATER THAN THE REQUIRED BHP.
N. PROVIDE FLORIDA APPROVED NOA CURB DESIGNED TO WITHSTAND HURRICANE WIND FORCES.
Q. SCHEDULED WEIGHT IS THE MAXIMUM ALLOWABLE OPERATING WEIGHT OF THE EQUIPMENT AND CURB.
R. COOLING COIL LAT IS LEAVING AIR TEMPERATURE OF COIL.
S. PROVIDE GUARDS TO PROTECT CONDENSER COIL FROM HAIL OR OTHER DAMAGE.
T. PROVIDE HEATER TO MEET OR EXCEED SCHEDULED MINIMUM MBH OUTPUT. NOMINAL INPUT IS BASED ON LISTED MANUFACTURER'S STANDARD PRODUCT. COORDINATE EQUIPMENT GAS LOAD WITH PLUMBING CONTRACTOR IF DIFFERENT FROM THAT SCHEDULED. MEET MINIMUM EFFICIENCY SCHEDULED.
U. ABS. MIN. O/A IS THE ABSOLUTE MINIMUM OUTSIDE AIR CFM USING VENTILATION RESET OR DEMAND CONTROL VENTILATION.
W. PROVIDE UNIT WITH FACTORY INSTALLED BACNET OPEN BOARD CONTROLLER WITH SUPPLY AND OUTSIDE AIR TEMPERATURE SENSORS. COORDINATE ALL CONTROLS WITH EMS VENDOR PRIOR TO PURCHASE.
Y. PROVIDE UNIT WITH FACTORY INSTALLED UNIT CONTROLLER WITH SUPPLY AND OUTSIDE AIR TEMPERATURE SENSORS. UNIT MOUNTED CONTROLLER SHALL BE ABLE TO INTERFACE WITH EMS CONTROLS AND BE BACNET MSTP COMPATIBLE. COORDINATE ALL CONTROLS WITH EMS VENDOR PRIOR TO PURCHASE.
Z. PROVIDE WITH DUCT SMOKE DETECTOR KIT. SMOKE DETECTORS WHALL SHUT DOWN UNIT UPON ALARM.

TAB CONTRACTOR REQUIRED TO WORK WITH CSUSA ONCE EMS SYSTEM IS COMMISSIONED AND 100% OPERATIONAL TO SET MIN O/A CFM AND ABS MIN O/A CFM

TAB CONTRACTOR WILL NEED TO TAKE OA CFM READINGS AT THE UNIT AS CSUSA MODULATES DAMPER OPEN. START TAKING READINGS AT 5% AND GO UP IN 5% INCREMENTS

ONCE WE DETERMINE WHAT POSITION THE DAMMPER NEEDS TO BE IN TO SUPPLY THE CORRECT AMOUNT OF CFM, THE POSITION WILL BE RECORDED IN THE SOFTWARE FOR THE LOGIC MODULATE TO THE POSITION.

REPEAT FOR BOTH SETTINGS

OUTSIDE AIR REQUIREMENTS, IMC-2015 (IP)

SYSTEM DESIGNATION	SYSTEM TAB NAME OR LIST 'SINGLE'	SINGLE-ZONE SYSTEMS ONLY: SINGLE-ZONE SYSTEM ASSOCIATED VENTILATION ZONE	SINGLE-ZONE SYSTEMS ONLY: SINGLE ZONE WORST CASE ZONE AIR DISTRIBUTION EFFECTIVENESS [Ez]	MULTI-ZONE SYSTEMS ONLY: SYSTEM VENTILATION EFFICIENCY [Ev]	FLOOR AREA SERVED BY SYSTEM [As] (SF)	SYSTEM AVERAGED AREA-BASED OUTDOOR AIR RATE (CFM/SF)	SYSTEM POPULATION [Ps] (PEOPLE)	SYSTEM AVERAGED PEOPLE-BASED OUTDOOR AIR RATE (CFM/P)	REQUIRED OA INTAKE FLOW [Vot] (CFM)	REQUIRED DCV OA INTAKE FLOW [Vot] (CFM)	DESIGN OA INTAKE FLOW [Vot] (CFM)	NOTES
RTU-1	RTU-1	-	-	0.97	700	0.047	4.32	5.00	56	34	125 / 75	
RTU-2	RTU-2	-	-	1.00	1,177	0.114	8	0.00	134	N/A	150 / 150	
RTU-3,4,5	RTU-3,4,5	-	-	0.95	8,797	0.116	126	7.50	2,067	1,074	2200 / 1100	
								TOTALS	2,258	1,108	2475 / 1325	

GENERAL NOTES:
1. VENTILATION CALCULATIONS BASED ON IMC-2015.
2. SYSTEM POPULATIONS BASED ON MAX SEATING AND/OR CODE MAXIMUM VALUES.
3. SINGLE ZONE SYSTEMS (Vot = Voz): SYSTEM VENTILATION EFFICIENCY CALCULATION IS NOT REQUIRED FOR SINGLE ZONE SYSTEMS. WORST CASE AIR DISTRIBUTION EFFECTIVENESS BETWEEN HEATING AND COOLING MODES OF OPERATION IS SHOWN IN TABLE.
4. 100% OA SYSTEMS (Vot = ∑all zones Voz): WHEN ONE AIR HANDLER SUPPLIES ONLY OUTDOOR AIR TO ONE OR MORE ZONES. EACH ZONE IS INDIVIDUALLY CALCULATED WITH ITS WORST CASE ZONE AIR DISTRIBUTION EFFECTIVENESS (HEATING/COOLING).
5. MULTI-ZONE RECIRCULATING SYSTEMS: CALCULATOR USED TO DETERMINE VENTILATION AIRFLOW IN COMPLIANCE WITH IMC-2015 VRP AND ASHRAE 62.1-2013 APPENDIX A. VENTILATION RATE SHOWN IS ACTUAL CALCULATED WITH CORRECTION FACTORS INCLUDED. EACH ZONE IS CALCULATED WITH ITS WORST CASE ZONE AIR DISTRIBUTION EFFECTIVENESS (HEATING/COOLING) AS PART OF CALCULATIONS TO FIND Ev.

EMS CONTROLS:
CONTRACTORS ARE RESPONSIBLE FOR COORDINATING ALL EQUIPMENT CONTROLS WITH EMS VENDOR PRIOR TO PURCHASE AND INSTALLATION. CONTRACTORS SHALL COORDINATE WITH EMS VENDOR TO PROVIDE ALL NECESSARY EQUIPMENT AND ACCESSORIES FOR A FULLY FUNCTIONING SYSTEM.

DRAWING USED FOR REFERENCE ONLY AND IS NOT TO BE SUBSTITUTED FOR CURRENT MEP DRAWING

Engineer:

Project Owner:
NIKE, Inc.
One Bowerman Drive
Beaverton, OR 97005
(503) 671-6453
www.nike.com

Project Address:
NIKE FACTORY STORE
WATERFORD LAKES SHOPPING CENTER
449 N. ALAFAYA TRAIL
ORLANDO, FL 32828
TEMPLATE ISSUE DATE 11/28/2018

Fixture Package: UNITE

Stamp:

Issued For: PERMIT/BID

Issue Date: 11/06/2020

Revisions:

NO.	REASON	DATE

PROJECT MANAGER: KH
CHECKED BY:
DRAWN BY: Author

Project Number: 62301411

Sheet Title: MECHANICAL SCHEDULES AND CONTROLS

Sheet Number: BAS-M3.0

BRADLEY E. CHAMBON

NikeFactoryStore

UNITE

WATERFORD LAKES SHOPPING CENTER
449 N. ALAFAYA TRAIL
ORLANDO, FL 32828

PERMIT/BID

11/06/2020

MALL MAP

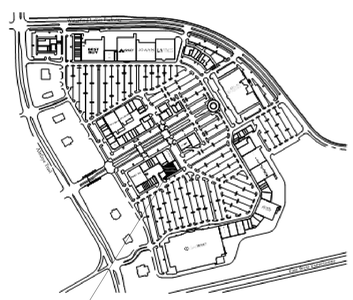

AREA MAP

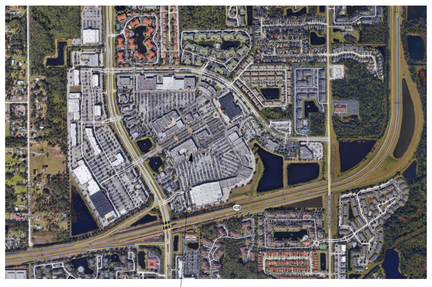

PROJECT DIRECTORY

BUILDING TENANT
NIKE INC.
ONE BOWERMAN DRIVE
NORTH AMERICAN RETAIL-MJ-1
BEAVERTON, OR 97005

LANDLORD
WASHINGTON PRIME GROUP
180 EAST BROAD STREET
COLUMBUS, OH 43215
CONTACT: JOHNNY HALL
TEL: (614) 887-5696
EMAIL: JOHNNY.HALL@WASHINGTONPRIME.COM

ARCHITECT
BRR ARCHITECTURE, INC.
8131 METCALF AVE, SUITE 300
OVERLAND PARK, KS 66204
CONTACT: KRISTIN HARTMAN
TEL: (913) 262-9095
FAX: (913) 262-9044
EMAIL: KRISTIN.HARTMAN@BRRARCH.COM

FIRE DEPARTMENT
ORANGE COUNTY FIRE RESCUE DEPARTMENT
OFFICE OF THE FIRE MARSHAL
7079 UNIVERSITY BLVD.
WINTER PARK, FL 32792
TEL: (407) 836-0004

TENANT PROJECT MANAGER
THE TOWNSON COMPANY
7157 COLLEYVILLE BLVD. SUITE 101
COLLEYVILLE, TX 76034
CONTACT: KEVIN TOWNSON
TEL: (817) 421-1177
EMAIL: KEVIN@TOWNSONCOMPANY.COM

BUILDING SUPERVISOR
WATERFORD LAKES TOWN CENTER
413 N. ALAFAYA TRAIL
ORLANDO, FL 32828
CONTACT: ERICK DAWSON
TEL: (407) 737-2866
EMAIL: ERICK.DAWSON@WASHINGTONPRIME.COM

M.E.P. ENGINEER
HENDERSON ENGINEERS
8325 LENEXA DRIVE
LENEXA, KS 66214
CONTACT: BRIAN FRERICHS
TEL: (913) 742-5501
FAX: (913) 742-5001
EMAIL: BRIAN.FRERICHS@HEI-ENG.COM

BUILDING DEPARTMENT
PERMITTING SERVES
ORANGE COUNTY ADMINSTRATION BUILDING, 1ST FLOOR
201 RASALIND AVENUE
ORLANDO, FL 32801
TEL: (407) 836-5550
EMAIL: PERMITTINGSERVICES@OCFL.NET

REQUIRED VENDORS

ALL VENDORS ARE PROPRIETARY AND MAY NOT BE SUBSTITUTED

AUDIO - VISUAL
AVI-SPL
6301 BENJAMIN RD, SUITE 101
TAMPA, FL 33634
CONTACT: MICHAEL HAVER
TEL: (303) 999-6100
michael.haver@avispl.com

SIGNAGE
RUGGLES SIGN COMPANY
308 CROSSFIELD DRIVE
VERSAILLES, KY 40383
CONTACT: CODY BAKER
TEL: (859) 297-1919
EMAIL: CBAKER@RUGGLES.COM

FITTING ROOM DOOR
CUSTOM STOREFRONTS, INC.
CONTACT: TYLER CAMPAIN
TEL: (913) 764.5042x242
FAX: (913) 764.9152
tylerc@customstorefronts.com
www.CustomStorefronts.com

FIXTURES
RTC
239 NW 13 TH ST, STE.310
PORTLAND, OR 97209
CONTACT: RICH KURCZEWSKI
TEL: (503) 241-1619
FAX: (503) 241-5494
EMAIL: rkurczewski@rtc.com

GRAPHICS & IMAGES
INFINITY IMAGES
5600 NE HASSALO STREET
PORTLAND, OR 97213
CONTACT: JULIE GLEASON
TEL: (503) 704-1804
EMAIL: julie.gleason@infinityimages.com

LEED
421 SOUTHWEST 6TH AVE, STE 200
PORTLAND, OR 97204-1629
PROTOTYPE ADMINISTRATOR:
ALICIA SNYDER-CARLSON
LEED VOLUME PROJECT MANAGER:
ALICIA SNYDER-CARLSON
TEL: (503) 467-4741
EMAIL: alicia.snyder-carlson@RWDI.com

SECURITY SYSTEM
TYCO
2815 SW 153RD DRIVE
BEAVERTON, OR 97006
CONTACT: FRANK COBURN
TEL: (503) 743-5096
fcoburn@tyco.com

LIGHTING
CAPITOL LIGHTING AND SUPPLY
732 MAIN STREET
COALPORT, PA 16627
CONTACT: JEROMIE UNDERHILL
TEL: (503) 668.8600
FAX: (503) 668.8868

EAS SYSTEM
SENSORMATIC
6724 STONY HILL ROAD
MCKINNEY, TX 75070
CONTACT: MATTHEW NASH
TEL: (360) 518-9782
EMAIL: mnash@tycoint.com

CLEANING SERVICE
SITE CREW, INC
3633 W. MACARTHUR BLVD. #400
SANTA ANA, CA 92704
CONTACT: BRIAN FAUL
TEL: (714) 668-0100
EMAIL: brian@sitecrewinc.com

FABRIC DUCT
PRIHODA NORTH AMERICA
CONTACT: ANDREW SORENSON
TEL: (855) 774-4632
EMAIL: andrew@prihoda-na.com

SURGE SUPRESSION
SURGE SUPRESSION INC
P.O. BOX 63-6857
CINCINNATI, OH 45263
CONTACT: WILL BANKER
TEL: (850) 259-3183
EMAIL: wbanker@surgesuppression.com

MOBILE STORAGE
PIPP MOBILE STORAGE
2966 WILSON DRIVE NW
WALKER, MI 49544
CONTACT: ED SHERMAN
TEL: (800) 234.7477
FAX: (616) 791.9916
EMAIL: edsherman@pippmobile.com

EMS
COMFORT SYSTEMS USA
2655 FORTUNE CIR W. STE E & F
INDIANAPOLIS, IN 46241
CONTACT: DON PHELPS
TEL: (317) 246-4647
CELL: (317) 714-9208
EMAIL: don.phelps@comfortsystemsusa.com
CONTACT: JEAN OSKINS
TEL: (317) 246-4278
EMAIL: jean.oskins@comfortsystemsusa.com

DATA CABLE VENDORS

NOTE: TENANT CONTRACTOR TO INCLUDE DATA CABLE COST IN BID FROM ONE OF THE LISTED COMPANIES

THE STONER GROUP
1904 S.E OCHOCO STREET
PORTLAND, OR 97222
ATTN: JON KARP
TEL: (503) 462-6500
EMAIL: jonk@stonergroup.com

CACHE VALLEY ELECTRIC
12550 SW 68TH AVENUE
PORTLAND, OR 97223
ATTN: ROB FANDREY
TEL: (503) 431-6634
EMAIL: robf@cve.com

FLOORING VENDORS

FELTED CARPET
LIORA MANNE
ATTN: BONNIE LASEK
EMAIL: BONNIE@LIORAMANNE.COM

NIKE REGRIND
ATTN: ROB SCHERZER
EMAIL: ROB@SCHERZERDESIGN.COM

WALK-OFF MAT
VAN GELDER, INC.
ATTN: AMANDA COCHRAN
TEL: (706) 609-3321
EMAIL: AMANDA@VANGELDER-INC.COM

FLOOR POLISHING
NATIONAL POLISHING SYSTEMS (NPS)
5145 BRECKSVILLE RD. SUITE 101
RICHFIELD, OH 44286
ATTN: BOB DETMAYER
TEL: (866) 856-3711
FAX: (330) 659-2042
bdetmayer@nationalpolishing.com

PREFERRED INDY
1360 S 10TH STREET
NOBLESVILLE, IN 46060
ATTN: JOHN NORTON
TEL: (317) 770-0070

LANDLORD REQUIRED SUBCONTRACTORS:

TENANT CONTRACTOR TO CONTACT PRIOR TO COMPLETING BID TO PROVIDE PROPER BID ESTIMATE:

Fire Protection
WAYNE AUTOMATIC
TEL: (407) 646-3030

Roofing
CORE ROOFING
TEL: (407) 434-7170

SYMBOL LEGEND

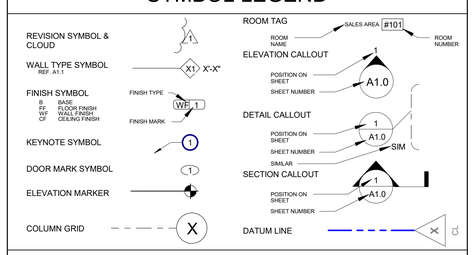

DEFERRED SUBMITTALS

- FIRE SPRINKLER
- FIRE ALARM
- BUILDING SIGNAGE

SCOPE OF WORK

THIS PROJECT CONSISTS OF BUT IS NOT LIMITED TO ALTERATIONS TO THE EXISTING DEFINED SPACE WITHIN THE WATERFORD LAKES SHOPPING CENTER, 449 N. ALAFAYA TRAIL, ORLANDO, FL 32828

ALL WORK SHALL BE WITHIN AN EXISTING SHELL BUILDING INCLUDING A ROOF STRUCTURE, DEMISING WALLS, STOREFRONT AND BULKHEAD.

ALL NEW WORK SHALL CONSIST OF INTERIOR PARTITION, MILLWORK, ELECTRICAL WORK, MECHANICAL, PLUMBING AND FLOORING MODIFICATIONS INSTALLED PER LOCAL BUILDING CODES DEFINED WITHIN DOCUMENTATION AND WITH ADHERENCE TO THE CONSTRUCTION DOCUMENTS AND SPECIFICATIONS.

THE RECONFIGURATION OF THE SPACE WILL NOT CAUSE A CHANGE TO THE OCCUPANCY TYPE. ACCESSIBILITY REQUIREMENTS WILL BE IN COMPLIANCE WITH ALL LOCAL CODES.

THIS PROJECT WILL BE SUBMITTED FOR LEED CERTIFICATION UPON COMPLETION OF CONSTRUCTION AND APPLICABLE COMMISSIONING.

ABBREVIATIONS

ABV	ABOVE
AFF	ABOVE FINISHED FLOOR
A.C.T.	ACOUSTICAL CEILING TILE
A.D.A.	AMERICANS WITH DISABILITIES ACT
ARCH	ARCHITECT(URAL)
BLDG	BUILDING
BD	BOARD
BLKG	BLOCKING
B.O.	BOTTOM OF
B.O.H.	BACK OF HOUSE
CPT	CARPET
CLG	CEILING
CLR	CLEAR
CONC	CONCRETE
CONSTR	CONSTRUCTION
CONT	CONTINUOUS / CONTINUATION
CMU	CONCRETE MASONRY UNIT
CPM	CONSTRUCTION PROJECT MANAGER
DEPT	DEPARTMENT
DET	DETAIL
DIA	DIAMETER
DIFF	DIFFUSER
DIM	DIMENSION
DISP	DISPENSER
DIV	DIVISION
DN	DOWN
DR	DOOR
DSCON	DISCONNECT
EA	EACH
ELEC	ELECTRICAL
EMBED	EMBEDDED / EMBEDMENT
ENG	ENGINEER(ED)
EQ.	EQUAL
EQUIP	EQUIPMENT
EXP JT	EXPANSION JOINT
EXT	EXTERIOR
EX	EXISTING
FAB	FABRICATION
FD	FLOOR DRAIN
FE	FIRE EXTINGUISHER
FE&C	FIRE EXTINGUISHER & CABINET
F.F.	FINISH FLOOR
FHC	FIRE HOSE CABINET
FRT	FIRE RETARDANT TREATED
F.O.	FRONT OF
FURN	FURNITURE
GA	GAUGE
GFRP	GLASS FIBER REINFORCED PLASTER
GL	GLASS / GLAZING
GYP	GYPSUM
GWB	GYPSUM WALL BOARD
HD	HEAD
H.M.	HOLLOW METAL
HORIZ	HORIZONTAL
HVAC	HEATING, VENTILATION, & AIR CONDITIONING
HT	HEIGHT
INFO	INFORMATION
INSUL	INSULATION
INT	INTERIOR
JAN	JANITOR
JDI	JUST DO IT
LAV	LAVATORY
LB	POUND
L.L.	LANDLORD
LT	LIGHT
LOD	LEASE OUTLINE DRAWING
MAX	MAXIMUM
MFD	MANUFACTURED
MFR	MANUFACTURER
MECH	MECHANICAL
MIN	MINIMUM
MISC	MISCELLANEOUS
MTD	MOUNTED
MTL	METAL
N.I.C.	NOT IN CONTRACT
NO	NUMBER
N.T.S.	NOT TO SCALE
N	NEW
O/	OVER
O.C.	ON CENTER
O.F.C.I.	OWNER FURNISHED, CONTRACTOR INSTALLED
OH	OPPOSITE HAND
OVHD	OVERHEAD
PNL	PANEL
PREFAB	PREFABRICATED
P.L.	PLASTIC LAMINATE
PM	PROJECT MANAGER
REF	REFERENCE
REFR	REFRIGERATOR / REFRIGERATED
REQ'D	REQUIRED
REINF	REINFORCE / REINFORCED
RM	ROOM
R.O.	ROUGH OPENING
S.F.	SQUARE FEET
SHORG	SHORING
SIM	SIMILAR
STL	STEEL
ST STL	STAINLESS STEEL
STRUCT	STRUCTURE
SRF	SURFACE
SUSP	SUSPENDED
SYS	SYSTEM(S)
T.B.D.	TO BE DETERMINED
TEMP	TEMPORARY
THK	THICK
TRT'D	TREATED
TSTAT	THERMOSTAT
TYP	TYPICAL
UNDRLAY	UNDERLAYMENT
UTL	UTILITY
U.N.O.	UNLESS NOTED OTHERWISE
V.C.T.	VINYL COMPOSITE TILE
VERT	VERTICAL
V.I.F.	VERIFY IN FIELD
VOC	VOLATILE ORGANIC COMPOUND
w/	WITH
WD	WOOD
WNDW	WINDOW
w/o	WITHOUT
WP	WATERPROOFING

SHEET INDEX

NUMBER	NAME
GENERAL	
CS1.0	TITLE SHEET
CS2.0	CODE REVIEW & EGRESS PLAN
CS3.0	GENERAL NOTES
CS4.0	ACCESSIBILITY NOTES & DETAILS
CS5.0	RESPONSIBILITY MATRIX
CS6.0	LEED SCORE CARD
ARCHITECTURAL	
DM1.0	DEMOLITION FLOOR PLAN
A0.0	SITE PLAN
A1.0	FLOOR PLAN
A1.1	PARTITION DETAILS & SEISMIC REQUIREMENTS
A1.2	DOOR SCHEDULE & DETAILS
A2.0	FINISH PLAN
A2.1	FINISH AND MATERIAL SCHEDULES
A3.0	FIXTURE PLAN
A4.0	REFLECTED CEILING PLAN
A4.1	CEILING DETAILS - SEISMIC CATEGORIES B
A4.2	CEILING GRID DIAGRAMS
A4.3	CEILING GRID DETAILS
A4.4	ROOF PLAN AND DETAILS
A5.0	SALES ELEVATIONS
A6.1	FITTING ROOM ENLARGED VIEWS
A6.2	FITTING ROOM ENLARGED VIEWS
A6.3	BACK OF HOUSE ENLARGED VIEWS
A6.4	DETAILS
A7.0	STOREFRONT ELEVATIONS
AS1.0	ARCHITECTURAL SPECIFICATIONS
AS2.0	ARCHITECTURAL SPECIFICATIONS
AS3.0	ARCHITECTURAL SPECIFICATIONS
AS4.0	ARCHITECTURAL SPECIFICATIONS
AS5.0	ARCHITECTURAL SPECIFICATIONS
AS6.0	ARCHITECTURAL SPECIFICATIONS
AS7.0	ARCHITECTURAL SPECIFICATIONS
AS8.0	ARCHITECTURAL SPECIFICATIONS
AS9.0	ARCHITECTURAL SPECIFICATIONS
MECHANICAL	
M0.0	MECHANICAL LEGEND AND GENERAL NOTES
M1.0	MECHANICAL PLAN
M2.0	MECHANICAL DETAILS
M3.0	MECHANICAL SCHEDULES AND CONTROLS
M4.0	MECHANICAL SPECIFICATIONS
M5.0	MECHANICAL ENERGY COMPLIANCE
M5.1	MECHANICAL ENERGY COMPLIANCE
PLUMBING	
P1.0	PLUMBING PLAN
P1.1	PLUMBING ENLARGED PLANS
P2.0	PLUMBING RISER DIAGRAMS
P3.0	PLUMBING SCHEDULES AND DETAILS
P4.0	PLUMBING SPECIFICATIONS
ELECTRICAL	
E0.0	ELECTRICAL LEGENDS AND GENERAL NOTES
E1.0	ELECTRICAL LIGHTING PLAN
E2.0	ELECTRICAL POWER PLAN
E2.1	ELECTRICAL LOW VOLTAGE PLAN
E3.0	ELECTRICAL ONE-LINE DIAGRAM AND SCHEDULES
E3.1	ELECTRICAL PANELBOARD SCHEDULES
E3.2	ELECTRICAL LIGHTING DETAILS & SCHEDULES
E3.3	ELECTRICAL DETAILS
E4.0	ELECTRICAL SPECIFICATIONS
E4.1	ELECTRICAL SPECIFICATIONS
E5.0	ELECTRICAL ENERGY COMPLIANCE
FIRE PROTECTION	
FA1.0	FIRE ALARM PLAN
FA2.0	FIRE ALARM SPECIFICATIONS
FS1.0	FIRE SPRINKLER PLAN
FS2.0	FIRE SPRINKLER SPECIFICATIONS
SECURITY	
SE1.0	SECURITY WORKPLAN
SE2.0	SECURITY WORKPLAN
SE-4.0	EAS WORKPLAN
SE-D.1	CAMERA DETAILS
SE-D.2	INSTALLATION DETAILS
SE-D.3	BA DETAILS
SE-D.4	EAS-DOOR-MAX
ENERGY MANAGEMENT	
BAS0.0	TITLE SHEET
BAS1.1	RISER DIAGRAM NOTES AND CHECK-OFF SHEET
BAS1.2	SINGLE-LINE RISER DIAGRAM
BAS1.3	COMMUNICATIONS SINGLE-LINE RISER DIAGRAM
BAS2.1A	WESCO GEAR MAIN CONTROL PANEL DETAIL
BAS2.1B	WESCO GEAR MAIN CONTROL PANEL ENLARGED DETAILS
BAS2.1C	WESCO GEAR MAIN CONTROL PANEL ENLARGED DETAILS
BAS2.2	WESCO GEAR MAIN CONTROL PANEL INPUT/OUTPUT INTERFACE DETAILS
BAS2.3	WESCO GEAR MAIN CONTROL PANEL INPUT/OUTPUT INTERFACE DETAILS
BAS3.1	GENERIC WATTSTOPPER SYSTEM WIRING DETAIL
BAS4.1	CARRIER FACTORY INSTALLED RTU OPEN BOARD INTERFACE DETAIL
BAS4.2	CARRIER FACTORY INSTALLED SYSTEM VU CONTROLS INTERFACE DETAILS
BAS4.3	PRICE MODULATING DIFFUSER INTERFACE DETAILS
BAS5.1	KW METER INTERFACE DETAIL
BAS5.2	KW METER PROGRAMMING DETAILS
BAS6.1	MISCELLANEOUS BACNET DEVICE INTERFACE DETAILS
BAS7.0	BILL OF MATERIAL
BAS8.1	SEQUENCE OF OPERATION
BAS8.2	SEQUENCE OF OPERATION
BAS-E1.0A	ELECTRICAL LIGHTING PLAN
BAS-E1.0B	ELECTRICAL LIGHTING PLAN
BAS-E2.0	ELECTRICAL POWER PLAN
BAS-E2.1	ELECTRICAL LOW VOLTAGE PLAN
BAS-E3.0	ELECTRICAL ONE-LINE DIAGRAM AND SCHEDULES
BAS-E3.1	ELECTRICAL PANELBOARD SCHEDULES
BAS-E3.2	ELECTRICAL LIGHTING DETAILS AND SCHEDULES
BAS-E3.3	ELECTRICAL DETAILS
BAS-M1.0	MECHANICAL PLAN
BAS-M3.0	MECHANICAL SCHEDULES AND CONTROLS
EMS0.0	COVER SHEET
EMS1.1	SINGLE LINE DIAGRAM
EMS1.2	SINGLE LINE DIAGRAM NOTES AND EMS CHECK-OFF
EMS2.1	WESCO IFS OPUS BACK PLATE DETAIL AND POINTS LIST
EMS2.2	WESCO IFS OPUS BACK PLATE INPUT & OUTPUT DETAILS
EMS2.3	WESCO IFS OPUS BACK PLATE INPUT & OUTPUT DETAILS
EMS3.1	WESCO IFS FACTORY DRAWINGS AND DETAILS
EMS3.2	WESCO IFS FACTORY DRAWINGS AND DETAILS
EMS3.3	WESCO IFS FACTORY DRAWINGS AND DETAILS
EMS3.4	WESCO IFS FACTORY DRAWINGS AND DETAILS
EMS3.5	WESCO IFS FACTORY DRAWINGS AND DETAILS
EMS4.1	CARRIER FACTORY INSTALLED BACNET RTU OPEN BOARD INTERFACE DETAILS
EMS5.0	PRICE MODULATING DIFFUSERS FACTORY BACNET CONTROLS INTERFACE
EMS6.1	DENT MODBUS KW METER INTERFACE DETAIL
EMS7.0	BILL OF MATERIAL
EMS8.0	SEQUENCE OF OPERATION
EMS-E1.0	ELECTRICAL LIGHTING PLAN
EMS-E2.0	ELECTRICAL POWER PLAN
EMS-E2.2	ELECTRICAL ENLARGED POWER PLANS AND DETAILS
EMS-E3.1	ELECTRICAL PANELBOARD SCHEDULES
EMS-E3.2	ELECTRICAL DETAILS AND SCHEDULES
EMS-M1.0	MECHANICAL PLAN
EMS-M3.0	MECHANICAL SCHEDULES

NOTE TO G.C. & VENDORS:

FOR ADDITIONAL LANDLORD INFORMATION, EXISTING AS-BUILT DRAWINGS, AND SITE PHOTOS, PLEASE REFERENCE THIS PROJECT'S FOLDER ON THE PLANGRID WEBSITE.

Architect:

brr

ARCHITECT OF RECORD:
BRR ARCHITECTURE, INC
8131 METCALF AVE
SUITE 300
OVERLAND PARK, KS 66204

www.brrarch.com

TEL: 913-262-9095
FAX: 913-262-9044

COPYRIGHT NOTICE

This drawing was prepared for use on a specific site contemporaneously with its issue date and it is not suitable for use on a different project site or at a later time. Use of this drawing for another project or on another project requires the services of properly licensed architects and engineers. Reproduction of this drawing for reuse on another project is not authorized and may be contrary to the law.

Engineer:

Project Owner:

NIKE, Inc.
One Bowerman Drive
Beaverton, OR 97005
(503) 671-6453
www.nike.com

Project Address:

NIKE FACTORY STORE
WATERFORD LAKES
SHOPPING CENTER
449 N. ALAFAYA TRAIL
ORLANDO, FL 32828
TEMPLATE ISSUE DATE: 11/28/2018

Fixture Package:

UNITE

Stamp:

NOT FOR CONSTRUCTION

Issued For:

PERMIT/BID

Issue Date:

11/06/2020

Revisions:

NO.	REASON	DATE

PROJECT MANAGER: KH
CHECKED BY:
DRAWN BY: RAN

Project Number:

62301411

Sheet Title:

TITLE SHEET

Sheet Number:

CS1.0

CODE SUMMARY

PROJECT DATA:

NAME OF PROJECT: NIKE UNITE - WATERFORD LAKES SHOPPING CENTER

ADDRESS: 449 N. ALAFAYA TRAIL ORLANDO, FL 32828

OWNER OR AUTHORIZED AGENT: NIKE Inc.

PROJECT SCOPE: ☐ NEW CONSTRUCTION ☐ ALTERATION ☐ UPFIT ■ RENOVATION (EXISTING BLDG.) ☐ RECONSTRUCTION

BUILDING DATA:

CONSTRUCTION TYPE: ☐ I-A ☐ II-A ☐ III-A ☐ IV ☐ V-B ☐ I-B ☐ II-B ■ III-B ☐ V-A ☐ V-N

SPRINKLERS: ■ YES ☐ NO

NOTE: REVISIONS TO THE CURRENT SPRINKLER SYSTEM ARE UNDER SEPARATE PERMIT TO BE SUBMITTED BY SPRINKLER CONTRACTOR.

BUILDING HEIGHT: 26' - 0"

SEISMIC ZONE: A

CLIMATE ZONE: 2

APPLICABLE CODES:

CODE ENFORCEMENT JURISDICTION:

☐ CITY ORLANDO

■ COUNTY ORANGE COUNTY

BUILDING CODE: 2017 FLORIDA EXISTING BUILDING CODE

PLUMBING CODE: 2017 FLORIDA PLUMBING CODE

MECHANICAL CODE: 2017 FLORIDA MECHANICAL CODE

ELECTRICAL CODE: 2014 NATIONAL ELECTIRCAL CODE

FIRE SAFETY CODE: FLORIDA FIRE PREVENTION CODE

ACCESSIBILITY CODE: 2017 FLORIDA ACCESSIBILITY CODE

ENERGY CODE: 2017 FLORIDA ENERGY CONSERVATION CODE AND ASHRAE 90.1-2010

FIRE PROTECTION REQUIREMENTS:

EXTERIOR BEARING WALL:	NON-COMBUSTIBLE
INTERIOR BEARING WALLS:	NON-COMBUSTIBLE
EXTERIOR NON-BEARING WALLS:	NON-COMBUSTIBLE
INTERIOR NON-BEARING WALLS:	NON-COMBUSTIBLE
STRUCTURAL FRAME:	NON-COMBUSTIBLE
TENANT DEMISING WALLS:	1HOUR U465
FLOOR / CEILING:	NON-COMBUSTIBLE
ROOF / CEILING:	NON-COMBUSTIBLE

BUILDING OCCUPANCY TYPE:

OCCUPANCY CLASSIFICATIONS:

☐ A-1 ☐ A-2 ☐ A-3 ☐ A-4 ☐ A-5 ☐ B

☐ I-1 ☐ I-2 ☐ I-3 ☐ I-4 ■ M ☐ S-1

☐ S-2

LIFE SAFETY SYSTEM REQUIREMENTS:

EMERGENCY LIGHTING:	■ YES	☐ NO
EXIT SIGNS:	■ YES	☐ NO
FIRE ALARM:	■ YES	☐ NO
SMOKE DETECTION SYSTEMS:	■ YES	☐ NO
PANIC HARDWARE:	■ YES	☐ NO

EGRESS OPENING REQUIRED:

2 EXIT(S)

0.2 PER OCCUPANT = 317 X 0.2 = 5' - 3" REQ'D

EGRESS PROVIDED:

3 EXIT(S)

14' - 5" PROVIDED

OCCUPANCY LOAD CALCULATIONS:

OCCUPANCY LOAD PER SQ.FT. AREA

USE	AREA (SF)	GROSS	OCC
MERCANTILE	9099 SF	30	304
STOCK	1171 SF	300	4
OFFICE	843 SF	100	9
Grand total: 3	11113 SF		317

TOTAL OCC = 317 PEOPLE

PLUMBING OCCUPANCY COUNT:

REFERENCE - MINIMUM PLUMBING FIXTURE

OCCUPANT COUNT = 317

WATER CLOSETS: 2 REQUIRED 2 PROVIDED

LAVATORY: 2 REQUIRED 2 PROVIDED

SHEET NOTES

A. DURING CONSTRUCTION PROVIDE A PORTABLE FIRE EXTINGUISHER WITH A RATING OF NOT LESS THAN 2-A OR 10BC WITHIN 75 FEET TRAVEL DISTANCE TO ALL PORTIONS OF THE BUILDING OR AS REQUIRED BY THE BUILDING/FIRE DEPT. FIELD INSPECTOR.

B. WHEN DUCT DETECTORS, REQUIRED BY CODE, ARE CONCEALED FROM VIEW, AN LED SHALL BE PROVIDED THROUGH THE CEILING LEVEL OR SIGHT OBSTRUCTION AT EACH DETECTOR. WHEN A COMPLETE SMOKE DETECTION SYSTEM IS PROVIDED, THE DUCT DETECTOR SHALL BE MONITORED BY THAT SYSTEM.

C. FIRE ALARMS:

C.1 VISUAL ALARMS. VISUAL ALARM SIGNAL APPLIANCES SHALL BE INTEGRATED INTO THE BUILDING OR FACILITY ALARM SYSTEM, IF SINGLE STATION AUDIBLE ALARMS ARE PROVIDED THEN SINGLE STATION VISUAL ALARM SIGNALS SHALL BE PROVIDED. VISUAL ALARM PHOTOMETRIC AND LOCATION FEATURES:

C.1.1 THE LAMP SHALL BE A XERION STROBE TYPE OR EQUIVALENT.

C.1.2 THE COLOR SHALL BE CLEAR OR NOMINAL WHITE (I.E., ALARM PHOTOMETRIC AND LOCATION FEATURES: UNFILTERED OR CLEAR FILTERED WHITE LIGHT).

C.1.3 ONE SECOND (0.2 SEC) WITH A MAXIMUM DUTY CYCLE OF 40 PERCENT. THE PULSE DURATION IS DEFINED AS THE TIME INTERVAL BETWEEN INITIAL AND FINAL POINTS OF 10 PERCENT OF MAXIMUM SIGNAL.

C.1.4 THE INTENSITY SHALL BE A MINIMUM OF 75 CANDELA.

C.1.5 THE FLASH RATE SHALL BE A MINIMUM OF 1 HZ AND A MAXIMUM OF 3 HZ.

C.1.6 THE APPLIANCE SHALL BE PLACED 80 IN (2030 Mm) ABOVE THE HIGHEST FLOOR LEVEL WITHIN THE SPACE OR 6 IN (152 MM) BELOW THE CEILING, WHICHEVER IS LOWER.

C.1.7 IN GENERAL, NO PLACE IN ANY ROOM OR SPACE REQUIRED TO HAVE A VISUAL SIGNAL APPLIANCE SHALL BE MORE THAN 50 FT (15M) FROM THE SIGNAL (IN THE HORIZONTAL PLANE). IN LARGE ROOMS AND SPACES EXCEEDING 100 FT (30M) ACROSS, WITHOUT OBSTRUCTIONS 6 FT (2M) ABOVE THE FINISH FLOOR, SUCH AS AUDITORIUMS, DEVICES MAY BE PLACED AROUND THE PERIMETER, SPACED A MAXIMUM 100 FT (30M) APART IN LIEU OF SUSPENDING APPLIANCES FROM THE CEILING.

C.1.8 NO PLACE IN COMMON CORRIDORS OR HALLWAYS IN WHICH VISUAL ALARM SIGNALING APPLIANCES ARE REQUIRED SHALL BE MORE THAN 50 FT (15M) FROM THE SIGNAL.

C.2 ALARM INITIATING DEVICE, ALARM SIGNALING DEVICE, AND OTHER FIRE ALARM SYSTEM COMPONENTS SHALL BE DESIGNED AND INSTALLED IN ACCORDANCE WITH LOCAL FIRE CODE STANDARDS.

D. SIGNS:

D.1 PROVIDE EXIT SIGNS AND DIRECTIONAL EXIT SIGNS WITH MINIMUM 6" HIGH BY 3/4" STROKE BLOCK LETTERS ON A CONTRASTING BACKGROUND AT LOCATIONS INDICATED ON FLOOR PLANS.

D.2 WHENEVER THE BUILDING IS OCCUPIED, EXIT SIGNS SHALL BE LIGHTED SO THAT THEY ARE CLEARLY VISIBLE.

D.3 EXIT SIGNS SHALL BE ELECTRICALLY ILLUMINATED. ILLUMINATION SHALL NORMALLY BE PROVIDED BY THE PREMISES WIRING SYSTEM. IN THE EVENT OF FAILURE OF THIS SYSTEM ILLUMINATION SHALL BE AUTOMATICALLY PROVIDED FROM AN EMERGENCY SYSTEM. EMERGENCY LIGHTING SHALL GIVE A VALUE OF ONE FOOT CANDLE AT FLOOR LEVEL OR AS REQUIRED BY LOCAL CODE.

E. SPRINKLER SYSTEM:

E.1 THIS SPACE IS CURRENTLY PROVIDED WITH AN AUTOMATIC WET PIPE SPRINKLER SYSTEM. THE FIRE PROTECTION CONTRACTOR SHALL BE RESPONSIBLE FOR THE MODIFICATION OF THE ORIGINAL DESIGN, PROVIDING A NEW LAYOUT, AND ALL MATERIALS REQUIRED FOR A COMPLETE AND OPERATIONAL SYSTEM FOR THE PROPOSED TENANT FINISH OF THIS SPACE. CONTRACTOR SHALL PREPARE ALL NEEDED DRAWINGS AND HAVE APPROVAL OF ALL STATE, LOCAL & INSURANCE UNDERWRITING AUTHORITIES AS WELL AS MEETING ALL N.F.P.A 13 REQUIREMENTS. THE SPRINKLER SYSTEM SHALL BE PRESSURE TESTED BY FIRE PROTECTION CONTRACTOR, INSPECTED AND APPROVED BY LOCAL FIRE MARSHALL PRIOR TO ACCEPTANCE BY OWNER. CONSULT WITH LANDLORD REPRESENTATIVE FOR EXACT EXISTING CONDITIONS OF FIRE PROTECTION SYSTEM FOR LOCATION, CONNECTION POINT, SIZE, TYPE, ETC. PROVIDE SIGNED AND SEALED DRAWINGS AS REQUIRED TO THE LOCAL AUTHORITY. DRAWINGS SHALL BE SIGNED AND SEALED BY THE PROFESSIONAL ENGINEER EMPLOYED BY FIRE PROTECTION CONTRACTOR, WHO IS IN RESPONSIBLE CHARGE OF THIS WORK.

E.2 ALL SPRINKLER SYSTEMS ARE REQUIRED TO HAVE DATA NAME PLATE POSTED AND MAINTAINED AT EACH RISER SPRINKLER SYSTEM SHALL BE INSTALLED TO COMPLY WITH MINIMUM OF CRITERIA AND CITY ORDINANCE CRITERIA.

E.3 SPRINKLER HEADS IN PUBLIC VIEWABLE CEILINGS MUST BE OF AN APPROVED CONCEALED TYPE. SURFACE MOUNTED HEADS ARE PERMITTED IN AREAS NOT VISIBLE TO CUSTOMER.

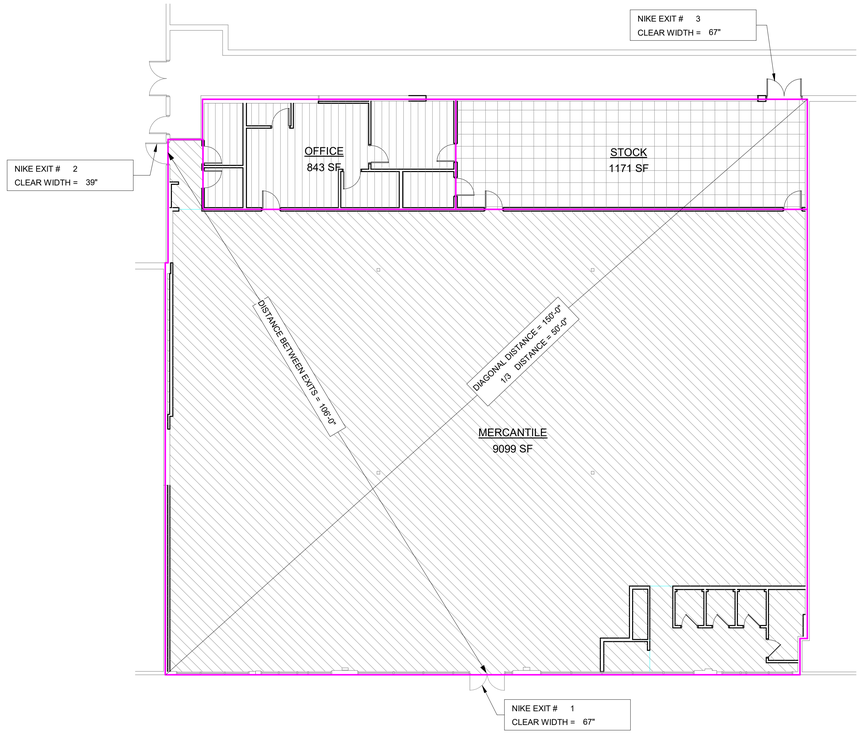

2 **CODE SUMMARY AREA PLAN**
3/32" = 1'-0"

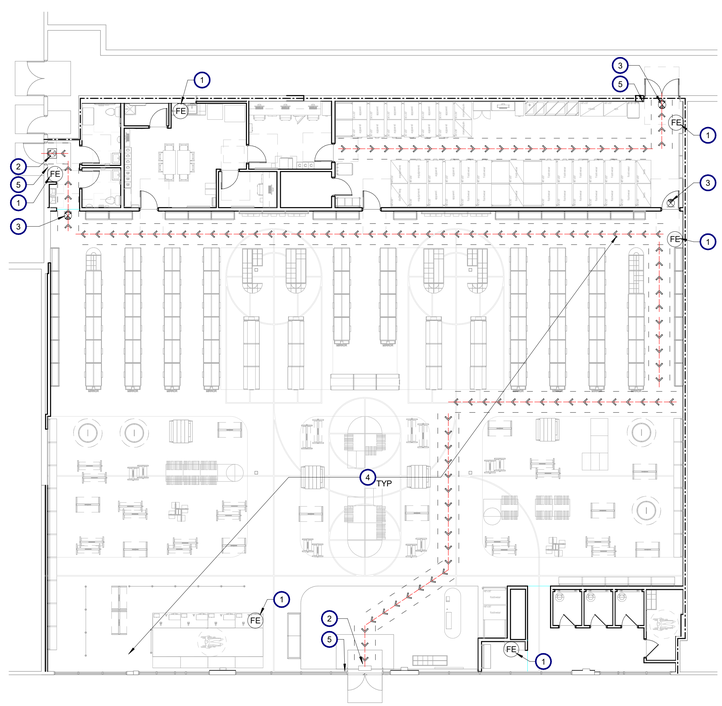

1 **EGRESS FLOOR PLAN**
3/32" = 1'-0"

LEGEND

EXIT — EMERGENCY EXIT SIGN

FE — FIRE EXTINGUISHER

44" — CLEAR PATH OF TRAVEL MIN. 44" WIDE TO BE MAINTAINED AT FIXTURE PLACEMENT

1 HOUR RATED PARTITION

AREA OF OCCUPIED SPACE

MERCANTILE

OFFICE

STOCK

KEYNOTES

1. FIRE EXTINGUISHER TYPE 2A:10BC BY TENANT CONTRACTOR COORDINATE FINAL LOCATION WITH FIRE MARSHAL
2. EXISTING EMERGENCY EXIT SIGNAGE BY LANDLORD.
3. EMERGENCY EXIT SIGNAGE WITH MINIMUM OF 5-FOOT CANDLES ON ILLUMINATED SURFACE. MOUNTED AT 6" ABOVE DOOR FRAME OR GLAZING OPENING.
4. EMERGENCY EXIT LIGHTS, REF ELECTRICAL DRAWINGS. THE EMERGENCY LIGHTING SYSTEM MUST PROVIDE CONTINUOUS ILLUMINATION FOR A MINIMUM OF 90 MINUTES AND COMPLY WITH STRINGENT CRITERIA FROM NATIONAL ELECTRICAL CODE, EMERGENCY SYSTEM, NFPA 1-1, AND LIFE SAFETY CODE.
5. TACTILE 'EXIT' SIGN, SEE DETAILS AND REQUIREMENTS ON SHEET CS4.0

Architect:

brr

ARCHITECT OF RECORD:
BRR ARCHITECTURE, INC
8131 METCALF AVE
SUITE 300
OVERLAND PARK, KS 66204

www.brrarch.com

TEL: 913-262-9095
FAX: 913-262-9044

COPYRIGHT NOTICE

This drawing was prepared for use on a specific site contemporaneously with its issue date and it is not suitable for use on a different project site or at a later time. Use of this drawing for construction on another project requires the services of properly licensed architects and engineers. Reproduction of this drawing for reuse on another project is not authorized and may be contrary to the law.

Engineer:

Project Owner:

NIKE, Inc.
One Bowerman Drive
Beaverton, OR 97005
(503) 671-6453
www.nike.com

Project Address:

NIKE FACTORY STORE
WATERFORD LAKES
SHOPPING CENTER
449 N. ALAFAYA TRAIL
ORLANDO, FL 32828
TEMPLATE ISSUE DATE: 11/28/2018

Fixture Package:

UNITE

Stamp:

NOT FOR CONSTRUCTION

Issued For:

PERMIT/BID

Issue Date:

11/06/2020

Revisions:

NO.	REASON	DATE

PROJECT MANAGER:
KH

CHECKED BY:

DRAWN BY:
RAN

Project Number:

62301411

Sheet Title:

CODE REVIEW & EGRESS PLAN

Sheet Number:

CS2.0

GENERAL NOTES

GENERAL PROJECT NOTES

1. THE DRAWINGS INDICATE THE GENERAL SCOPE OF THE PROJECT IN TERMS OF ARCHITECTURAL DESIGN CONCEPT, DIMENSIONS, THE MAJOR ELEMENTS AND SYSTEMS. AS SUCH, THE DRAWINGS DO NOT NECESSARILY INDICATE OR DESCRIBE ALL WORK ELECTRICAL REQUIRED FOR FULL PERFORMANCE AND COMPLETION OF THE REQUIREMENTS OF THE CONTRACT DOCUMENTS. ON THE BASIS OF THE GENERAL SCOPE INDICATED OR DESCRIBED, THE TENANT CONTRACTOR SHALL FURNISH ALL ITEMS REQUIRED FOR THE PROPER EXECUTION AND COMPLETION OF THE WORK.
2. THE STRUCTURAL, MECHANICAL, PLUMBING, AND ELECTRICAL DRAWINGS ARE SUPPLEMENTARY TO THE ARCHITECTURAL DRAWINGS AND IT SHALL BE THE RESPONSIBILITY OF THE TENANT CONTRACTOR TO CHECK THE ARCHITECTURAL DRAWINGS BEFORE FABRICATION AND/OR INSTALLATION OF THE WORK. NOTIFY THE ARCHITECT OF ANY DISCREPANCIES BETWEEN THE ARCHITECTURAL DRAWINGS AND DRAWINGS DONE BY CONSULTING ENGINEERS.
3. ANY WORK INSTALLED IN CONFLICT WITH THE ARCHITECTURAL OR ELECTRICAL DRAWINGS SHALL BE CORRECTED BY THE TENANT CONTRACTOR AT HIS OWN EXPENSE, AND AT NO ADDITIONAL EXPENSE TO ARCHITECT OR NIKE.
4. THE TENANT CONTRACTOR SHALL VISIT THE SITE AND BE KNOWLEDGEABLE OF CONDITIONS THEREOF. TENANT CONTRACTOR SHALL INVESTIGATE, VERIFY AND BE RESPONSIBLE FOR ALL CONDITIONS OF THE PROJECT AND SHALL NOTIFY NIKE OF ANY CONDITION REQUIRING MODIFICATION BEFORE PROCEEDING WITH THE WORK.
5. ALL SYMBOLS AND ABBREVIATIONS USED ON THE DRAWINGS ARE CONSIDERED CONSTRUCTION STANDARDS. IF THE TENANT CONTRACTOR HAS QUESTIONS REGARDING SAME, OR THEIR EXACT MEANING, THE ARCHITECT SHALL BE NOTIFIED FOR CLARIFICATION.
6. ALL DIMENSIONS SHALL BE VERIFIED IN THE FIELD BEFORE PROCEEDING WITH THE WORK. THE ARCHITECT AND NIKE SHALL BE NOTIFIED OF ANY CORRECTION.
7. DIMENSIONS ARE TO BE CONSIDERED "NOMINAL" UNLESS OTHERWISE NOTED. ALL WALL DIMENSIONS ARE FINISHED FACE OF WALL UNLESS OTHERWISE NOTED.
8. ALL DIMENSIONS SHALL HAVE PREFERENCE OVER SCALE. DO NOT SCALE DRAWINGS. LARGE SCALE DETAILS GOVERN OVER SMALL SCALE DETAILS.
9. CONSTRUCTION FOR WORK INDICATED ON THE DRAWINGS AS (NIC) OR "BY OTHERS" IS NOT IN THE CONTRACT. SUBSEQUENT DRAWINGS AND SPECIFICATIONS WILL BE SUBMITTED BY OTHERS FOR SEPARATE APPROVAL AND SEPARATE BUILDING PERMITS. THE TENANT CONTRACTOR SHALL COORDINATE ALL THE TRADES OF THIS WORK DIRECTLY OR INDIRECTLY INVOLVED WITH APPROVED ADDITIONAL WORK.
10. PROVIDE ACCESS PANELS AS REQUIRED BY APPLICABLE CODES AND AS REQUIRED FOR MECHANICAL, ELECTRICAL AND PLUMBING EQUIPMENT. ALL ACCESS PANELS SHALL BE CONCEALED AND LOCATIONS SHALL BE REVIEWED WITH THE ARCHITECT.
11. COORDINATE PLACEMENT OF ALL CEILING ELEMENTS WITH MECHANICAL ELECTRICAL AND INSTALLER. WHERE DISCREPANCIES EXIST BETWEEN DRAWINGS AND INSTALLATION, REVIEW WITH ARCHITECT AND NIKE PRIOR TO PROCEEDING.
12. WHERE RECESSED ON NON-MODULAR FIXTURES, DIFFUSERS, SPEAKERS OR OTHER EXPOSED DEVICES ARE USED, THEY ARE TO BE CENTERED IN THE CEILING'S TILE PATTERN UNLESS OTHERWISE NOTED.
13. ALL PIPE, DUCTS AND BUS DUCTS THAT PENETRATE FLOOR SLABS SHALL BE INSTALLED IN MANNER THAT WILL PRESERVE THE FIRE RESISTIVE AND STRUCTURAL INTEGRITY OF THE BUILDING.
14. IT IS THE TENANT CONTRACTORS RESPONSIBILITY TO PROVIDE MECHANICAL SHOP DRAWINGS FOR APPROVAL BY TENANT PRIOR TO COMMENCEMENT OF WORK. ALL MECH. DUCT PENETRATIONS OF RATED ASSEMBLIES SHALL BE PROTECTED AS REQ'D.
15. THE TENANT CONTRACTOR SHALL PROVIDE ALL NECESSARY BLOCKING, FRAMING, HANGERS OR OTHER SUPPORT FOR ALL FIXTURES, EQUIPMENT, CABINETRY, FURNISHINGS AND ALL OTHER ITEMS REQUIRING THE SAME.
16. THE TENANT CONTRACTOR SHALL PROVIDE A FIRE PREVENTION SYSTEM DURING THE CONSTRUCTION PHASE OF THE PROJECT AND SHALL PROVIDE PERMANENTLY MOUNTED FIRE EXTINGUISHERS IN LOCATIONS DETERMINED BY THE LOCAL FIRE DEPARTMENT.
17. REFER TO MECHANICAL AND PLUMBING CONTRACTOR'S DRAWINGS AND MANUFACTURER'S TEMPLATE DRAWINGS FOR ALL MECHANICAL AND PLUMBING EQUIPMENT SUPPORTS, BOLT SETTING TEMPLATES, ISOLATION SPRINGS ETC., NOT SHOWN ON DRAWINGS.
18. TENANT CONTRACTOR SHALL COORDINATE ALL SLAB AND WALL OPENINGS REQUIRED BY MECHANICAL AND PLUMBING DRAWINGS.
19. PROVIDE ACOUSTICAL BATT INSULATION AT ALL DUCTS, SHAFTS, TOILET ROOM WALLS AND MECHANICAL ROOM WALLS ADJACENT TO OCCUPIED TENANT SPACE.
20. GLASS DOORS, ADJACENT PANELS, AND ALL GLAZED OPENINGS WITH 18" OF THE ADJACENT FLOOR SHALL BE OF GLASS APPROVED FOR IMPACT HAZARD.
21. IT IS TENANT CONTRACTOR'S RESPONSIBILITY TO PROVIDE SHOP DRAWINGS FOR APPROVAL BY TENANT PRIOR TO COMMENCEMENT OF WORK.
22. VERIFY LOCATION OF ENTRY DOORS, GRID AND DEMISING WALLS. NOTIFY ARCHITECT AND NIKE'S CONSTRUCTION PROJECT MANAGER IMMEDIATELY IF ANY DISCREPANCY EXISTS.
23. EXISTING STRUCTURAL COLUMNS TO REMAIN. NOTIFY ARCHITECT IF THERE IS ANY DISCREPANCY ON LOCATION WHICH MIGHT INTERFERE WITH NEW STORE DESIGN.
24. EXISTING DEMISING WALLS OR EXTERIOR WALLS TO REMAIN. NOTIFY ARCHITECT IMMEDIATELY IF ANY DISCREPANCY EXISTS.
25. TENANT CONTRACTOR TO VERIFY ALL DIMENSIONS WITHIN (1) WEEK OF START OF PROJECT AND BEFORE ANY NEW CONSTRUCTION BEGINS. ANY DISCREPANCIES TO BE RESOLVED WITH CONSTRUCTION PROJECT MANAGER AND ARCHITECT PRIOR TO START OF FRAMING AND ROUGH-IN.
26. VERIFY ALL EXISTING SHELL COMPONENT LOCATIONS AND HEIGHTS IN FIELD. NOTIFY BOTH ARCHITECT AND NIKE'S CONSTRUCTION PROJECT MANAGER IF THERE IS ANYTHING BELOW 12'-6" HIGH IN SALES AREA.
27. TENANT CONTRACTOR SHALL COORDINATE WORK WITH LANDLORD AND ENSURE MINIMAL DISRUPTION TO MALL OPERATION TO MALL OPERATION AND ADJACENT.
28. TENANT CONTRACTOR TO MAINTAIN THE INTEGRITY OF ALL FIRE-RATED CONSTRUCTION.
29. ALL CONCEALED WOOD USED IN THIS PROJECT TO BE FIRE RETARDANT TREATED AND AS APPROVED BY THE LOCAL BUILDING OFFICIAL.
30. ALL GUSSETS, COUNTERS, SHELVES, ETC. TO BE CONSTRUCTED WITH GRADE II MDF. NO OTHER PARTICLE BOARD, WAFER BOARD, ETC. WILL BE ACCEPTED.
31. ALL FINISHES TO MEET REQUIRED FLAME SPREAD RATING PER LOCAL CODE REQUIREMENTS.
32. ALL WOOD USED MUST MEET THE REQUIREMENTS LISTED IN DIVISION 06100 & 06200 OF THE PRODUCT SPECIFICATIONS.
33. TENANT CONTRACTOR TO ENSURE THAT HVAC SYSTEM IS NOT DAMAGED BY AIRBORNE CONTAMINANTS. INSTALL NEW FILTERS PRIOR TO START OF CONSTRUCTION AND AFTER CONSTRUCTION COMPLETION IF (EX) RTU'S ARE TO REMAIN.
34. ESTABLISH HIGHPOINT ON PERIMETER WALLS BEFORE ANY WORK BEGINS.
35. ALL DIMENSIONS INDICATED ON DRAWINGS ARE FROM FACE OF FINISH TO FACE OF FINISH. ALL DIMENSIONS SHOULD BE FIELD VERIFIED PRIOR TO CONSTRUCTION OF ANY MILLWORK.
36. TENANT CONTRACTOR TO PROVIDE CLEAR ELASTOMERIC SEALANT AT ALL EXPANSION AND COLD JOINTS IN FLOOR SLAB.
37. PROVIDE CLEAR SEALANT AROUND ALL WALL MOUNTED ITEMS.
38. INSTALL ALL FINISHES PER MANUFACTURERS SPECIFICATIONS.
39. ALL DRYWALL SURFACES TO BE A MINIMUM OF LEVEL 4 FINISH.
40. SEE VENDOR DRAWINGS FOR LOCATION AND MOUNTING DETAILS FOR ALL LOW VOLTAGE AUDIO VISUAL, SECURITY, AND DATA EQUIPMENT.
41. TENANT CONTRACTOR TO COORDINATE THE PARTIAL ENLARGED ELECTRICAL POWER PLANS, VENDOR DRAWINGS, AND THESE ENLARGED VIEWS. SHOULD THERE BE ANY CONFLICTS OR DISCREPANCIES WITH REGARD TO COUNTER HEIGHT OR LAYOUTS, ELECTRICAL DEVICES SHOWN ON ONE BUT NOT THE OTHER, VERTICAL HEIGHTS, ETC., CONTACT THE ARCHITECT AND/OR NIKE REPRESENTATIVE FOR CLARIFICATION BEFORE PROCEEDING WITH WORK.

Architect:

brr

ARCHITECT OF RECORD:
BRR ARCHITECTURE, INC
8131 METCALF AVE
SUITE 300
OVERLAND PARK, KS 66204

www.brrarch.com

TEL: 913-262-9095
FAX: 913-262-9044

COPYRIGHT NOTICE

This drawing was prepared for use on a specific site contemporaneously with its issue date and it is not suitable for use on a different project site or at a later time. Use of this drawing for construction on another project requires the services of properly licensed architects and engineers. Reproduction of this drawing for reuse on another project is not authorized and may be contrary to the law.

Engineer:

Project Owner:

NIKE, Inc.
One Bowerman Drive
Beaverton, OR 97005
(503) 671-6453
www.nike.com

Project Address:

NIKE FACTORY STORE
WATERFORD LAKES
SHOPPING CENTER
449 N. ALAFAYA TRAIL
ORLANDO, FL 32828
TEMPLATE ISSUE DATE: 11/28/2018

Fixture Package:

UNITE

Stamp:

NOT FOR CONSTRUCTION

Issued For:

PERMIT/BID

Issue Date:

11/06/2020

Revisions:

NO.	REASON	DATE

PROJECT MANAGER:
KH

CHECKED BY:

DRAWN BY:
RAN

Project Number:

62301411

Sheet Title:

GENERAL NOTES

Sheet Number:

CS3.0

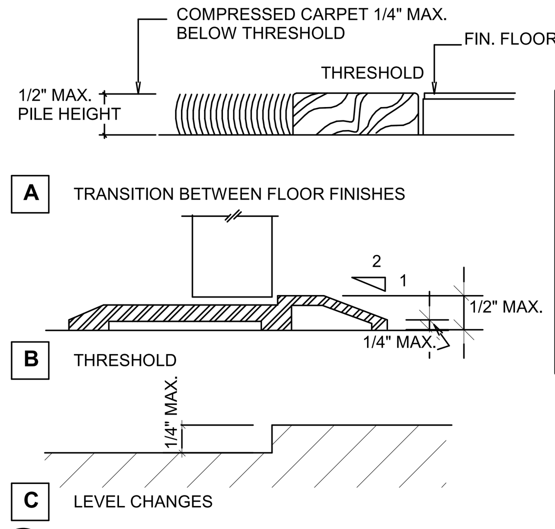

NOTES:

1. 1/2" MAXIMUM TOTAL HEIGHT WITH 1/4" MAXIMUM VERTICAL CHANGE AT EDGE.
2. 1 : 2 SLOPED BEVEL REQUIRED IF LEVEL CHANGE IS OVER 1/4" VERTICAL LEVEL CHANGE.
3. 1/4" MAXIMUM VERTICAL LEVEL CHANGE.

8 **ACCESSIBLE THRESHOLD**
12" = 1'-0"

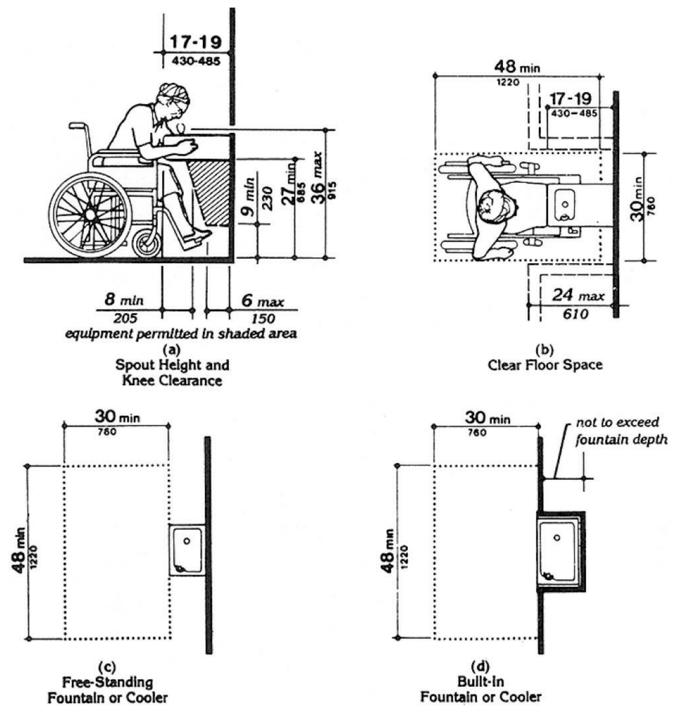

7 **ACCESSIBLE DRINKING FOUNTAIN**
NTS

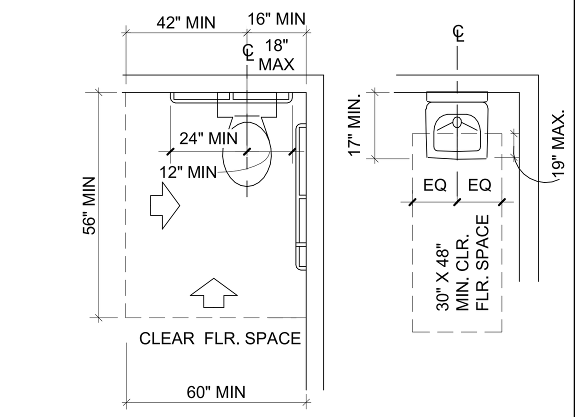

A CLEAR FLOOR SPACES

VERIFY WITH LOCAL AND STATE REQUIREMENTS

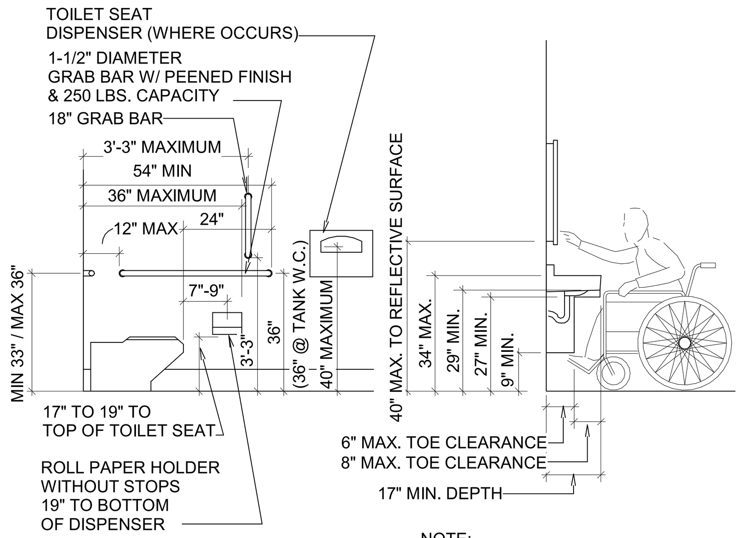

B ELEVATIONS

NOTE:
PROVIDE PRIVACY DOOR LOCK WHEN IT IS A PRIVATE TOILET OR FOR UNISEX USE.
GRAB BARS; SEE TYPICAL ACCESSIBILITY NOTES SHEET.

PRIVACY / UNISEX TOILET ROOM

NOTE: TENANT CONTRACTOR TO VERIFY ALL APPLICABLE ACCESSIBILITY NOTES WITH THE LOCAL JURISDICTION AND CODES. ALL ITEMS LISTED MAY NOT APPLY TO THIS PROJECT

6 **ACCESSIBLE RESTROOM**
NTS

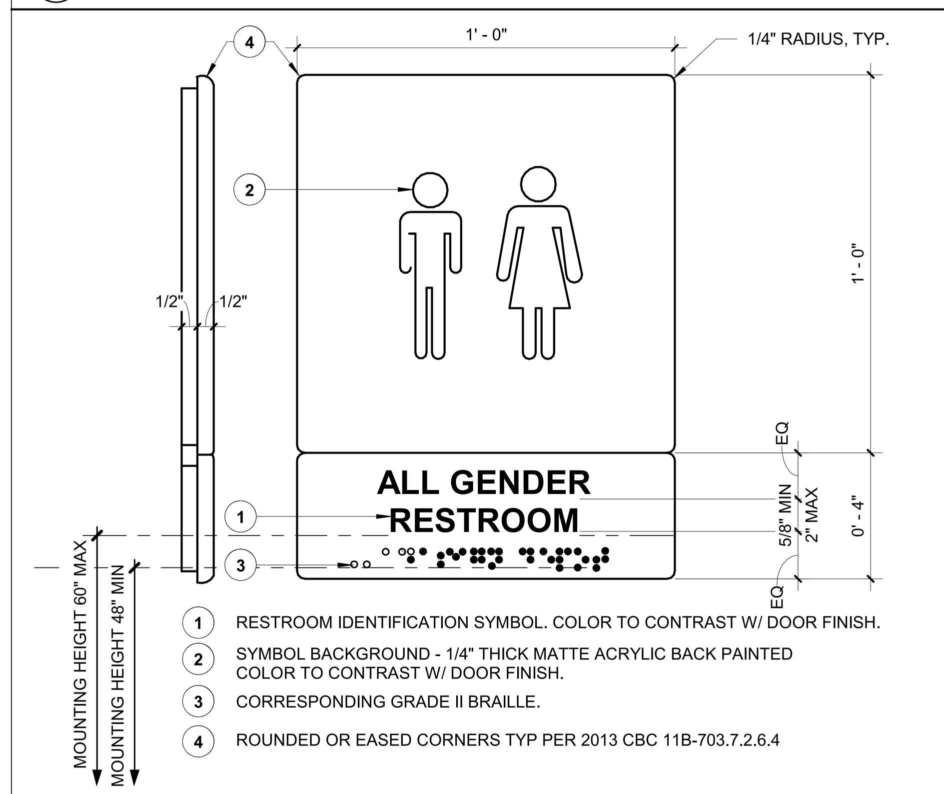

1. RESTROOM IDENTIFICATION SYMBOL. COLOR TO CONTRAST W/ DOOR FINISH.
2. SYMBOL BACKGROUND - 1/4" THICK MATTE ACRYLIC BACK PAINTED COLOR TO CONTRAST W/ DOOR FINISH.
3. CORRESPONDING GRADE II BRAILLE.
4. ROUNDED OR EASED CORNERS TYP PER 2013 CBC 11B-703.7.2.6.4

5 **ALL GENDER RESTROOM WALL SIGN**
3" = 1'-0"

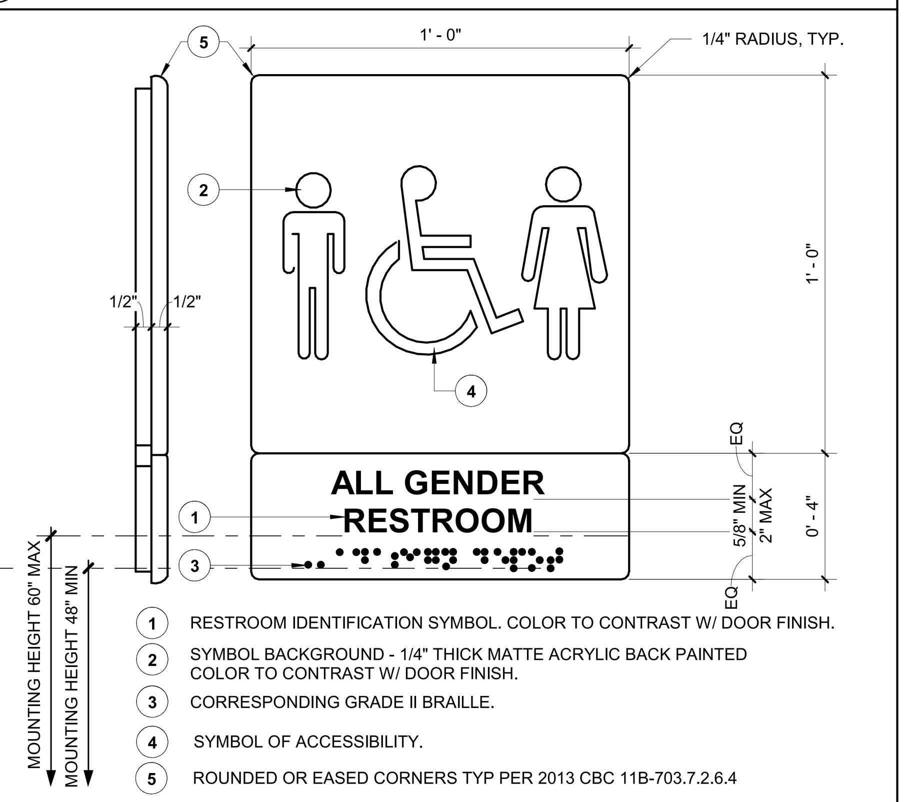

1. RESTROOM IDENTIFICATION SYMBOL. COLOR TO CONTRAST W/ DOOR FINISH.
2. SYMBOL BACKGROUND - 1/4" THICK MATTE ACRYLIC BACK PAINTED COLOR TO CONTRAST W/ DOOR FINISH.
3. CORRESPONDING GRADE II BRAILLE.
4. SYMBOL OF ACCESSIBILITY.
5. ROUNDED OR EASED CORNERS TYP PER 2013 CBC 11B-703.7.2.6.4

4 **ADA ALL GENDER RESTROOM WALL SIGN**
3" = 1'-0"

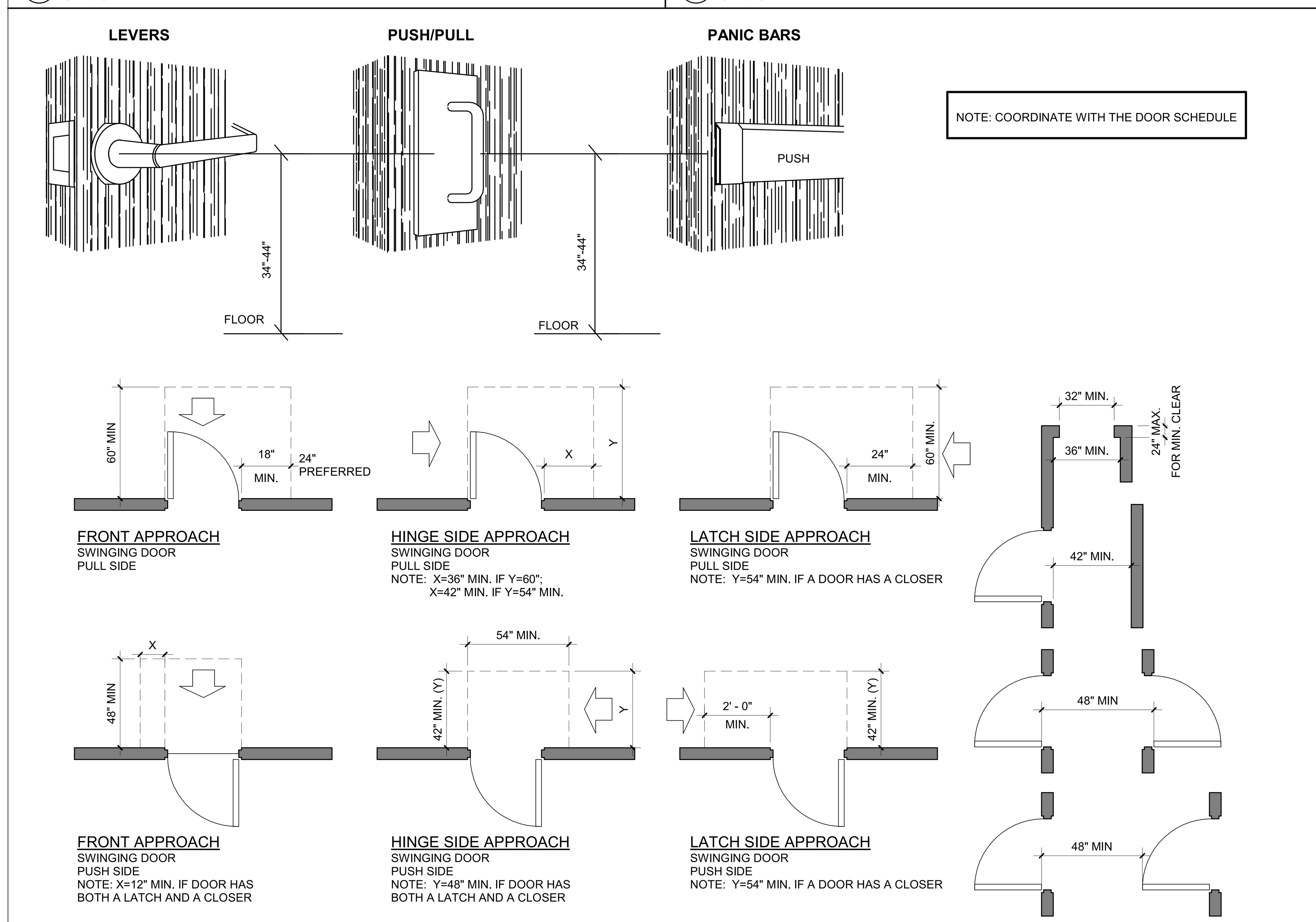

NOTE: COORDINATE WITH THE DOOR SCHEDULE

3 **ACCESSIBLE REQUIREMENT FOR DOOR**
3/8" = 1'-0"

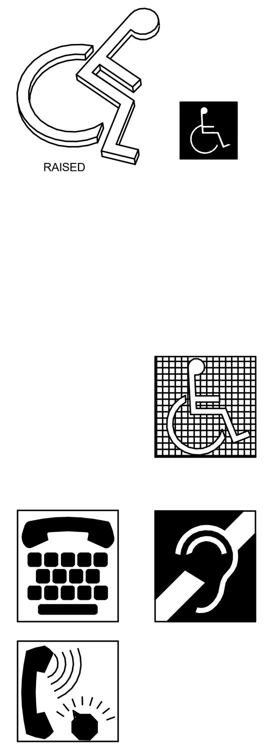

LETTERS AND NUMBERS:

1. CHARACTERS SHALL BE SELECTED FROM FONTS WHERE THE WIDTH OF THE UPPERCASE LETTER "O" IS 60 PERCENT MINIMUM AND 110 PERCENT MINIMUM OF THE HEIGHT OF THE UPPERCASE LETTER "I".
2. STROKE THICKNESS OF THE UPPERCASE LETTER "I" SHOULD BE 15 PERCENT MAXIMUM OF THE HEIGHT OF THE CHARACTER.
3. CONTRAST CHARACTERS AND SYMBOLS WITH BACKGROUND.
4. SANS SERIF CHARACTERS.

SIGNS / PICTOGRAMS:

5. PICTOGRAMS / PICTORIAL SYMBOL SIGNS SHALL BE ACCOMPANIED BY THE EQUIVALENT VERBAL DESCRIPTION PLACED DIRECTLY BELOW THE PICTOGRAM. THE BORDER DIMENSION SHALL BE 6" MINIMUM HEIGHT.
6. CHARACTERS AND BACKGROUNDS SHALL BE OF NON-GLARE CONTRASTING COLORS.
7. SIGNS / PICTOGRAMS SHALL BE INSTALLED ON THE WALL ADJACENT TO DOOR LEADING TO THE ROOM OR SPACE THEY DESCRIBE AND AT 60" A.F.F. TO SIGN CENTERLINE AND WHERE A PERSON MAY APPROACH WITHIN 3" OF SIGNAGE WITHOUT ENCOUNTERING PROTRUDING OBJECTS OR STANDING WITHIN THE DOOR SWING AREA.
8. VERTICAL CLEARANCE AT SUSPENDED SIGNS WITH MINIMUM HEADROOM OF 80" REQUIRE MINIMUM 3" CHARACTER HEIGHT MEASURED BY USING UPPERCASE "X". CHARACTERS AND NUMBERS SHALL BE SIZED ACCORDING TO VIEWING DISTANCE FROM WHICH READ. LOWER CASE CHARACTERS PERMITTED.

SIGN LOCATIONS:

9. ALL ACCESSIBLE ENTRANCES IDENTIFIED WITH MINIMUM OF ONE STANDARD SIGN.
10. ADDITIONAL DIRECTIONAL SIGNS ALONG ACCESSIBLE PATH OF TRAVEL ARE REQUIRED.
11. BUILDINGS REMODELED TO PROVIDE ACCESSIBLE SANITARY FACILITIES FOR PUBLIC USE SHALL HAVE INFORMATION POSTED IN THE LOBBY AS PART OF THE BUILDING DIRECTORY.

INTERNATIONAL SYMBOL OF ACCESSIBILITY:

12. STANDARD USED TO IDENTIFY ACCESSIBLE FACILITIES.
13. CHARACTERS AND SYMBOLS SHALL CONTRAST WITH THEIR BACKGROUND EITHER LIGHT CHARACTERS ON A DARK BACKGROUND OR DARK CHARACTERS ON A LIGHT BACKGROUND.
14. WHEN ENFORCING AGENCY DETERMINES, IF APPROPRIATE, SPECIAL DESIGNS AND COLORS MAY BE APPROVED.

GENERAL NOTES:

ACCESSIBLE ENTRANCES - ACCESSIBLE BUILDING ENTRANCES ARE REQUIRED TO BE IDENTIFIED WITH AT LEAST ONE STANDARD SIGN AND ADDITIONAL DIRECTIONAL SIGNS, AS REQUIRED, TO BE VISIBLE TO PERSONS ALONG APPROACHING PEDESTRIAN WAYS.

THE INTERNATIONAL SYMBOL OF ACCESSIBILITY IS REQUIRED TO IDENTIFY FACILITIES THAT ARE ACCESSIBLE. THE SYMBOL - A WHITE FIGURE ON A BLUE BACKGROUND (COLOR NO. 15090) IN FEDERAL STANDARD 595A.

BRAILLE:
1. CHARACTER TYPE: CHARACTERS ON SIGNS SHALL BE RAISED 1/32" (0.794 MM) MINIMUM AND SHALL BE SANS SERIF UPPERCASE CHARACTERS ACCOMPANIED BY GRADE II BRAILLE.
2. CHARACTER SIZE: RAISED CHARACTERS SHALL BE A MINIMUM OF 5/8" (15.9 MM) AND A MAXIMUM OF 2" (51 MM) HIGH.
3. FINISH AND CONTRAST: CONTRAST BETWEEN CHARACTERS, SYMBOLS, AND THEIR BACKGROUND MUST HAVE A NON-GLARE FINISH. 11B-703.5.1
4. CHARACTERS SHALL BE SELECTED FROM FONTS WHERE THE WIDTH OF THE UPPERCASE LETTER "O" IS 60 PERCENT MINIMUM AND 110 PERCENT MINIMUM OF THE HEIGHT OF THE UPPERCASE LETTER "I".

ALL LETTERS MEASURED MUST BE UPPERCASE. AFTER CHOOSING A TYPESET TO TEST, BEGIN BY PRINTING THE LETTERS I, X, AND O AT 1 INCH HIGH. PLACE THE TEMPLATES 1:1 SQUARE OVER THE X OR O, WHICHEVER IS NARROWER. IF THE CHARACTERS IS NOT SMALLER THAN 1 INCH NOR NARROWER THAN THE 3:5 RECTANGLE TO DETERMINE IF THE STROKE OF THE I IS TOO BROAD AND THE 1:10 RECTANGLE TO SEE IF IT IS TOO NARROW. IF ALL THE TESTS ARE PASSED, THE TYPESET IS COMPLIANT WITH PROPORTION CODE.

TEMPLATE FOR CHECKING CHARACTER AND STROKE WIDTH TO HEIGHT PROPORTIONS:

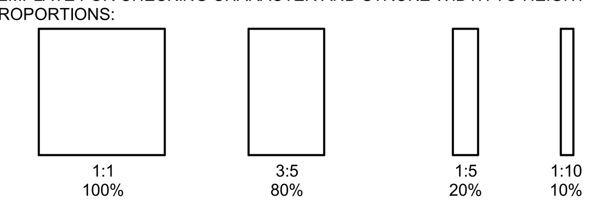

CHARACTER WIDTH **STROKE WIDTH**

5. BRAILLE: CALIFORNIA GRADE II BRAILLE SHALL BE USED WHENEVER BRAILLE IS REQUIRED IN OTHER PORTIONS OF THE STANDARDS. DOTS SHALL BE 1/10" (2.54MM) ON CENTERS IN EACH CELL WITH 3/10" (7.6MM) SPACE BETWEEN CELLS, MEASURED M CELL. DOTS SHALL BE RAISED A MINIMUM OF 1/4" (0.635MM) ABOVE THE BACKGROUND. 11B-703.3

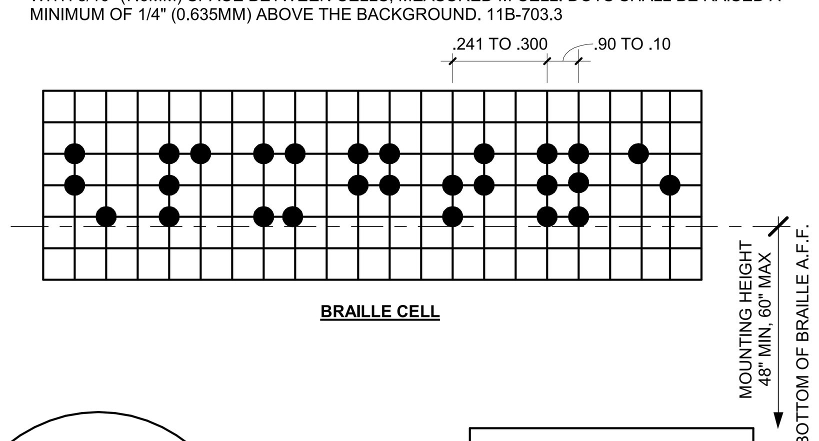

BRAILLE CELL

ROUNDED DOT (ACCEPTABLE)

SQUARED DOT (NOT ACCEPTABLE)

BRAILLE DOT

RECOMMENDED ROUNDED OR DOMED CALIFORNIA BRAILLE DOTS, EACH DISTINCT AND SEPARATE. DOTS WITH STRAIGHT SIDES AND FLAT TOPS ARE NOT READABLE FOR MANY BRAILLE USERS.

2 **ACCESSIBILITY SIGN / PICTOGRAMS**
1 : 1

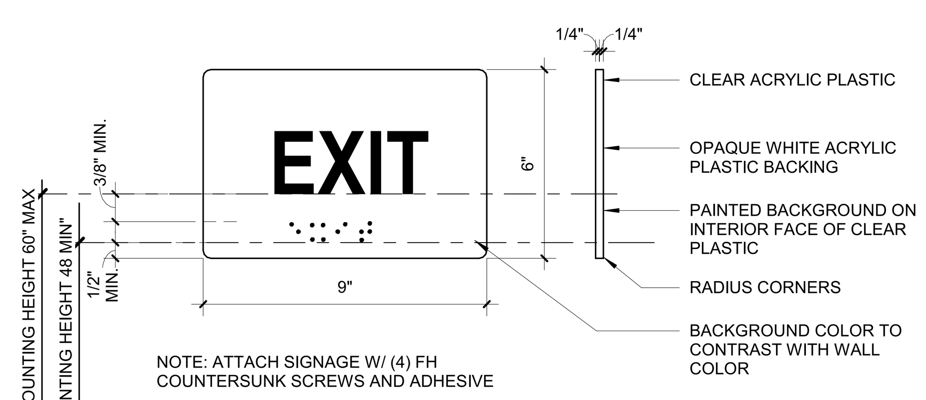

NOTE: ATTACH SIGNAGE W/ (4) FH COUNTERSUNK SCREWS AND ADHESIVE

1 **ACCESSIBILITY TACTILE EXIT SIGNAGE**
3" = 1'-0"

ACCESSIBILITY NOTES

A. PEDESTRIAN RAMPS

1. ANY PATH OF TRAVEL SHALL BE CONSIDERED A RAMP IF ITS SLOPE IS GREATER THAN 1 FOOT RISE IN 20 HORIZONTAL RUN (5%).
2. PEDESTRIAN RAMPS SERVING ACCESSIBLE ENTRANCES TO BUILDINGS SHALL HAVE A CLEAR WIDTH NOT LESS THAN THE WIDTH REQUIRED FOR WALKS.
3. PEDESTRIAN RAMPS SERVING ACCESSIBLE ENTRANCES TO BUILDINGS SHALL BE A MINIMUM 48 INCHES CLEAR WIDTH.
4. PEDESTRIAN RAMPS SERVING ACCESSIBLE ENTRANCES TO BUILDINGS HAVING AN OCCUPANT LOAD OF 300 OR MORE SHALL HAVE A MINIMUM CLEAR WIDTH OF 60 INCHES.
5. NOT USED
6. THE MAXIMUM SLOPE OF A RAMP THAT SERVES ANY EXIT, PROVIDES DISABLED ACCESS OR IS IN THE PATH OF TRAVEL SHALL BE 1 FOOT RISE IN 12 FEET OF HORIZONTAL RUN. THE LEAST POSSIBLE SLOPE SHALL BE USED FOR ANY RAMP.
7. RAMP LANDINGS SHALL BE PROVIDED AT THE TOP AND BOTTOM OF EACH RAMP.
8. INTERMEDIATE LANDINGS SHALL BE PROVIDED AT INTERVALS NOT EXCEEDING 30 INCHES OF VERTICAL RISE AND AT EACH CHANGE OF DIRECTION. LANDINGS ARE NOT CONSIDERED IN DETERMINING THE MAXIMUM HORIZONTAL DISTANCE OF EACH RAMP.
9. TOP LANDINGS SHALL BE NOT LESS THAN 60 INCHES WIDE AND SHALL HAVE A LENGTH OF NOT LESS THAN 60 INCHES IN THE DIRECTION OF RAMP RUN.
10. DOORS IN ANY POSITION SHALL NOT REDUCE THE MINIMUM DIMENSION OF THE RAMP LANDING TO LESS THAN 42 INCHES AND SHALL NOT REDUCE THE REQUIRED WIDTH BY MORE THAN 3-1/2 INCHES WHEN FULLY OPEN.
11. THE WIDTH OF THE LANDING SHALL EXTEND 24 INCHES PAST THE STRIKE EDGE OF ANY DOOR OR GATE FOR EXTERIOR RAMPS AND 18 INCHES PAST THE STRIKE EDGE FOR INTERIOR RAMPS.
12. INTERMEDIATE LANDINGS AT A CHANGE OF DIRECTION AND BOTTOM LANDINGS SHALL HAVE A DIMENSION IN THE DIRECTION OF RAMP RUN OF NOT LESS THAN 72 INCHES.
13. AT BOTTOM AND INTERMEDIATE LANDINGS, THE WIDTH SHALL BE AT LEAST THE SAME AS REQUIRED FOR THE RAMPS.
14. OTHER INTERMEDIATE LANDINGS SHALL HAVE A DIMENSION IN THE DIRECTION OF RAMP RUN OF NOT LESS THAN 60 INCHES.
15. THE SLOPE ACROSS A RAMP LANDING IN ANY DIRECTION SHALL NOT EXCEED 1/4 INCH RISE IN 1 FOOT OF HORIZONTAL RUN.
16. HANDRAILS ARE REQUIRED ON RAMPS THAT PROVIDE DISABLED ACCESS, IF THE SLOPE EXCEEDS 1 FOOT RISE IN 20 FEET OF HORIZONTAL RUN.
17. HANDRAILS SHALL BE PLACED ON EACH SIDE OF EACH RAMP. HANDRAILS SHALL BE CONTINUOUS, THE FULL LENGTH OF THE RAMP, SHALL BE AT 34 INCHES ABOVE THE RAMP WITH A HORIZONTAL RAIL AT 27" ABOVE RAMP SURFACE WHEN INTERMEDIATE RAILING WITH MAX. OF 4" OF CLEAR SPACE IS NOT REQUIRED. LOW HORIZONTAL RAIL SHALL EXTEND SAME AS REQUIRED FOR HANDRAILS AND SHALL EXTEND A MIN. OF 1 FOOT BEYOND THE TOP AND BOTTOM OF THE RAMP, AND THE ENDS SHALL BE RETURNED TO A WALL, FLOOR, OR POST.
18. HANDRAILS PROJECTING FROM A WALL SHALL HAVE A SPACE OF NOT LESS THAN 2 INCHES BETWEEN THE WALL AND THE HANDRAIL.
19. THE GRIP PORTION OF THE HANDRAIL SHALL BE NOT LESS THAN 1 1/4 INCHES NOR MORE THAN 1 1/2 INCHES IN CROSS SECTIONAL OUTSIDE DIMENSION, OR THE SHAPE SHALL PROVIDE AN EQUIVALENT GRIPPING SURFACE AND ALL SURFACES SHALL BE SMOOTH WITH NO SHARP CORNERS. SEE TYPICAL ACCESSIBILITY DETAIL SHEET.
20. THE SURFACE ON RAMPS SHALL BE NON-SLIP MEETING A MINIMUM COEFFICIENT OF FRICTION OF O.8.
21. WHEN THE RAMP SURFACE IS NOT BOUNDED BY A WALL OR FENCE AND THE RAMP EXCEEDS 10 FEET IN LENGTH, THE RAMP SHALL COMPLY WITH ONE OF THE FOLLOWING REQUIREMENTS:
    A. A GUIDE CURB A MINIMUM OF 2 INCHES IN HEIGHT SHALL BE PROVIDED AT EACH SIDE OF THE RAMP, EXCEPT WHEN ADJACENT GRADE IS 4" OR GREATER BELOW RAMP SURFACE, THEN CURB SHALL BE A MIN. 6" HIGH ABOVE RAMP SURFACE.
    B. A WHEEL GUIDE RAIL SHALL BE PROVIDED, CENTERED 3 INCHES PLUS OR MINUS 1 INCH ABOVE THE SURFACE ON THE RAMP.
    C. SEE NOTE #T-7 FOR ADDITIONAL INFORMATION.
22. WHERE A RAMP SURFACE HAS A SLOPE OF 1:20 (5%) OR GREATER AND THE ADJACENT GRADE IS THE RAMP SURFACE A CURB 6" HIGH ABOVE THE RAMP SURFACE SHALL BE PROVIDED ALONG SUCH OPEN SIDE OF RAMP SURFACE GREATER THAN 4" BELOW OR WHEEL GUIDE. SEE 21.B ABOVE.
23. WHERE AN ADJACENT GRADE IS 30" BELOW THE OPEN SIDE OF THE RAMP, A 42"-45" HIGH GUARDRAIL SHALL BE INSTALLED WITH INTERMEDIATE MEMBERS SO AN OBJECT OF 4" DIAMETER CAN NOT PASS THROUGH SUCH INTERMEDIATE MEMBERS.

B. ENTRANCES

1. AT LEASE ONE PRIMARY ENTRANCE (NOTE: SOME GOVERNING AGENCIES MAY DEFINE EXITS AS A BLDG. ENTRANCE) TO BUILDING AND FACILITIES SHALL BE MADE ACCESSIBLE TO THE PHYSICALLY DISABLED, QUANTITY OF ACCESSIBLE ENTRANCES, ALTHOUGH, SHALL BE AS REQUIRED BY THE GOVERNING AGENCIES.
2. ALL DISABLED ACCESSIBLE ENTRANCES, SHALL BE IDENTIFIED WITH AT LEAST ONE STANDARD SIGN AND WITH ADDITIONAL DIRECTIONAL SIGNS VISIBLE FROM APPROACHING PEDESTRIAN WAYS.
3. EVERY REQUIRED ENTRANCE, "EXIT", OR PASSAGE DOORWAY SHALL BE OF A SIZE AS TO PERMIT THE INSTALLATION OF A DOOR NOT LESS THAN 3 FEET IN WIDTH AND NOT LESS THAN 6 FEET, 8 INCHES IN HEIGHT. DOORS SHALL BE CAPABLE OF OPENING AT LEAST 90 DEGREES AND SHALL BE SO MOUNTED THAT THE CLEAR WIDTH OF THE DOORWAY IS NOT LESS THAN 32 INCHES.
4. WHERE A PAIR OF DOORS IS UTILIZED AT LEAST ONE OF THE DOORS SHALL PROVIDE A CLEAR UNOBSTRUCTED OPENING WIDTH OF 32 INCHES WITH THE LEAF POSITIONED AT AN ANGLE OF 90 DEGREES FROM ITS CLOSED POSITION.
5. WHEN AN AUTOMATIC DOOR OPERATOR IS UTILIZED TO OPERATE A PAIR OF DOORS, AT LEAST ONE OF THE DOORS SHALL PROVIDE A CLEAR UNOBSTRUCTED OPENING WIDTH OF 32 INCHES WITH THE DOOR POSITIONED AT AN ANGLE OF 90 DEGREES FROM ITS CLOSED POSITION.
6. LATCHING AND LOCKING DOORS THAT ARE HAND ACTIVATED AND WHICH ARE IN A PATH OF TRAVEL, SHALL BE OPERABLE WITH A SINGLE EFFORT BY LEVER TYPE HARDWARE, PANIC BARS, PUSH-PULL ACTIVATING BARS, OR OTHER HARDWARE DESIGNED TO PROVIDE PASSAGE WITHOUT REQUIRING THE ABILITY TO GRASP THE OPENING HARDWARE.
7. HAND ACTIVATED DOOR OPENING HARDWARE SHALL BE CENTERED BETWEEN 34 INCHES AND 44 INCHES ABOVE THE FLOOR.
8. THE FLOOR OR LANDING ON EACH SIDE OF AN ENTRANCE OR PASSAGE DOOR SHALL BE LEVEL. THE LEVEL AREA SHALL HAVE A LENGTH IN THE DIRECTION OF DOOR SWING OF AT LEAST 60 INCHES AND THE LENGTH OPPOSITE THE DIRECTION OF DOOR SWING OF 48 INCHES AS MEASURED AT RIGHT ANGLES TO THE PLANE OF THE DOOR IN ITS CLOSED POSITION.
9. THE WIDTH OF THE LEVEL AREA ON THE SIDE TO WHICH THE DOOR SWINGS SHALL EXTEND 24 INCHES PAST THE STRIKE EDGE OF THE DOOR FOR EXTERIOR DOORS AND 18 INCHES PAST THE STRIKE EDGE FOR INTERIOR DOORS. WHEN DOOR PAST THE STRIKE EDGE FOR INTERIOR DOORS. WHEN DOOR LATCH AND A CLOSER, 12" OF CLEARANCE SHALL BE PROVIDED AT THE DOOR STRIKE EDGE OPPOSITE OF THE DOOR SWING.
10. THE FLOOR OR LANDING SHALL BE NOT MORE THAN 1/2 INCH LOWER THAN THE THRESHOLD OF THE DOORWAY. CHANGE IN LEVEL BETWEEN 1/4 INCH AND 1/2 INCH SHALL BE BEVELED WITH A SLOPE NO GREATER THAN 1:2.
11. THE BOTTOM 10 INCHES OF ALL DOORS SHALL HAVE A SMOOTH UNINTERRUPTED SURFACE TO ALLOW THE DOOR TO BE OPENED BY A WHEELCHAIR FOOTREST WITHOUT CREATING A TRIP OR HAZARDOUS CONDITION. WHERE NARROW FRAME DOORS ARE USED, A 10 INCH HIGH SMOOTH PANEL SHALL BE INSTALLED ON THE PUSH SIDE OF THE DOOR, WHICH WILL ALLOW THE DOOR TO BE OPENED BY A WHEELCHAIR FOOTREST WITHOUT CREATING A TRIP OR HAZARDOUS CONDITION. SEE TYPICAL ACCESSIBILITY DETAIL SHEET.
12. THE SPACE BETWEEN TWO CONSECUTIVE DOOR OPENINGS IN A VESTIBULE, SERVING OTHER THAN A REQUIRED EXIT STAIRWAY SHALL PROVIDE A MINIMUM OF 48 INCHES OF CLEAR SPACE FROM ANY DOOR OPENING INTO SUCH VESTIBULE WHEN THE DOOR IS POSITIONED AT AN ANGLE OF 90 DEGREES FROM ITS CLOSED POSITION. DOORS IN A SERIES SHALL SWING EITHER IN THE SAME DIRECTION OR AWAY FROM THE SPACE BETWEEN THE DOORS.
13. MAXIMUM EFFORT TO OPERATE DOORS SHALL NOT EXCEED 8 1/2 LBS. FOR EXTERIOR DOORS AND 5LBS. FOR INTERIOR DOORS SUCH PULL OR PUSH EFFORT BEING APPLIED AT RIGHT ANGLE TO HINGED DOORS AND AT THE CENTER PLANE OF SLIDING OR FOLDING DOORS. COMPENSATING DEVICES OR AUTOMATIC DOOR OPERATORS MAY BE UTILIZED TO MEET THE ABOVE STANDARDS. WHEN FIRE DOORS ARE REQUIRED, THE MAXIMUM EFFORT TO OPERATE THE DOOR MAY BE INCREASED UP TO 15 LBS.

C. FLOORS AND LEVELS

1. IN BUILDINGS AND FACILITIES, FLOORS OF ANY GIVEN SPACE SHALL HAVE A COMMON LEVEL THROUGHOUT, OR SHALL BE CONNECTED BY PEDESTRIAN RAMPS, PASSENGER ELEVATORS AND/OR, WHEN ALLOWED, SPECIAL ACCESS LIFTS.
2. FLOORS ARE TO BE SLIP RESISTANT.

D. SANITARY FACILITIES (GENERAL)

1. WHEN SANITARY FACILITIES ARE LOCATED ON ACCESSIBLE FLOORS OF A BUILDING, THEY SHALL BE MADE ACCESSIBLE TO THE PHYSICALLY DISABLED.
2. WHERE SEPARATE FACILITIES ARE PROVIDED FOR NON-DISABLED PERSONS OF EACH SEX, SEPARATE FACILITIES SHALL BE PROVIDED FOR DISABLED PERSONS OF EACH SEX ALSO. WHERE UNISEX FACILITIES ARE PROVIDED FOR NON-DISABLED WHERE UNISEX FACILITIES ARE PROVIDED FOR NON-DISABLED THE DISABLED.
3. ALL DOORWAYS LEADING TO SANITARY FACILITIES SHALL HAVE 32 INCH CLEAR UNOBSTRUCTED OPENINGS.

E. SINGLE ACCOMMODATION TOILET FACILITIES (WHERE INDICATED)

1. THERE SHALL BE SUFFICIENT SPACE IN THE TOILET ROOM FOR A WHEELCHAIR MEASURING 30 INCHES WIDE BY 48 INCHES LONG TO ENTER THE ROOM AND PERMIT THE DOOR TO CLOSE.
2. THE WATER CLOSET SHALL BE LOCATED IN A SPACE WHICH PROVIDES A MIN. OF 28 INCH WIDE CLEAR SPACE BETWEEN THE WATER CLOSET'S FURTHEST MOST PROTRUDING EDGE AND AN ADJACENT FIXTURE OR A 32 INCH WIDE CLEAR SPACE BETWEEN THE WATER CLOSET'S FURTHEST MOST PROTRUDING EDGE AND AN ADJACENT WALL AT ONE SIDE AND 48 INCHES OF CLEAR SPACE IN FRONT OF THE WATER CLOSET IF THE COMPARTMENT HAS AN END OPENING DOOR (FACING THE WATER CLOSET).
3. A 60 INCH MINIMUM LENGTH CLEAR SPACE SHALL BE PROVIDED IN AN ACCESSIBLE COMPARTMENT WHEN THE DOOR IS LOCATED AT THE SIDE OF THE TOILET STALL COMPARTMENT. GRAB BARS SHALL NOT PROJECT MORE THAN 3 INCHES INTO THE CLEAR SPACES AS SPECIFIED ABOVE.
4. TURNAROUND CLEAR SPACE OF 60" DIAMETER SHALL BE PROVIDED WITHIN THE TOILET ROOM.
5. PROVIDE IDENTIFICATION SYMBOLS ON DOOR AND WALL. SEE "SIGNS/PICTOGRAMS" DETAIL AND TYPICAL TENANT IMPROVEMENT DRAWINGS.

F. TOILET ROOM FIXTURES AND ACCESSORIES

1. THE HEIGHT OF ACCESSIBLE WATER CLOSETS SHALL BE A MINIMUM OF 17 INCHES AND A MAXIMUM OF 19 INCHES MEASURED TO THE TOP OF THE TOILET SEAT.
2. PROVIDE MINIMUM 16" AND MAXIMUM 18 INCHES FROM THE CENTERLINE OF THE WATER CLOSET TO THE ADJACENT WALL.
3. TOILET FLUSH CONTROLS SHALL BE OPERABLE WITH ONE HAND, AND SHALL NOT REQUIRE TIGHT GRASPING, PINCHING, OR TWISTING OF THE WRIST. CONTROLS FOR THE FLUSH VALVES SHALL BE MOUNTED ON THE WIDE SIDE OF THE TOILET AREAS, NO MORE THAN 44 INCHES ABOVE THE FLOOR. THE FORCE REQUIRED TO ACTIVATE CONTROLS SHALL BE NO GREATER THAN 5 POUNDS.
4. WHERE URINALS ARE PROVIDED, AT LEAST ONE SHALL HAVE A CLEAR SPACE 30 INCHES WIDE X 48 INCHES LONG IN FRONT OF THE URINAL.
5. WHERE URINALS ARE PROVIDED, AT LEAST ONE WITH A RIM PROJECTING A MINIMUM OF 13 1/2 INCHES FROM THE WALL AND A MAXIMUM OF 17 INCHES ABOVE THE FLOOR SHALL BE PROVIDED.
6. URINAL FLUSH CONTROLS SHALL BE OPERABLE WITH ONE HAND AND SHALL NOT REQUIRE TIGHT GRASPING, PINCHING OR TWISTING OF THE WRIST AND SHALL BE MOUNTED NO MORE THAN 44 INCHES THE WRIST AND SHALL BE MOUNTED NO MORE THAN 44 INCHES CONTROLS SHALL BE NO GREATER THAN 5 POUNDS PER FOOT.
7. A CLEAR FLOOR SPACE 30 INCHES WIDE X 48 INCHES LONG SHALL BE PROVIDED IN FRONT OF A LAVATORY TO ALLOW A FORWARD APPROACH, SUCH CLEAR FLOOR SPACE SHALL ADJOIN OR OVERLAP AN ACCESSIBLE ROUTE AND SHALL EXTEND INTO KNEE AND TOE SPACE UNDERNEATH THE LAVATORY.
8. LAVATORIES SHALL BE MOUNTED WITH A CLEARANCE OF AT LEAST 29 INCHES FROM THE FLOOR TO THE BOTTOM OF THE APRON WITH KNEE CLEARANCE UNDER THE FRONT LIP EXTENDING A MINIMUM OF 30 INCHES IN WIDTH WITH 8 INCHES MINIMUM DEPTH AT THE TOP. TOE CLEARANCE SHALL BE THE SAME WIDTH AND SHALL BE A MINIMUM OF 9 INCHES HIGH FROM THE FLOOR AND A MINIMUM OF 17 INCHES DEEP FROM THE FRONT OF THE LAVATORY.
9. A PROJECTION OF A LAVATORY BOWL INTO THE 8 INCH CLEAR SPACE, THEREBY REDUCING THE CLEAR HEIGHT BELOW THE LAVATORY TO NO LESS THAN 27 INCHES AT 8 INCHES BACK FROM THE APRON, MEETS THE REQUIREMENT FOR PROVIDING KNEE CLEARANCE. THE MAXIMUM HEIGHT OF 34 INCHES SHALL BE MAINTAINED TO THE TOP OF THE COUNTERTOP OR LAVATORY BOWL RIM IF THE ALTERNATOR IS A DROP-IN MODEL, WHICHEVER IS HIGHER.
10. HOT WATER AND DRAIN PIPES UNDER LAVATORIES SHALL BE INSULATED OR OTHERWISE COVERED. THERE SHALL BE NO SHARP OR ABRASIVE SURFACES UNDER LAVATORIES.
11. FAUCET CONTROLS AND OPERATING MECHANISMS SHALL BE OPERABLE WITH ONE HAND AND SHALL NOT REQUIRE TIGHT GRASPING, PINCHING OR TWISTING OF THE WRIST. THE FORCE REQUIRED TO ACTIVATE CONTROLS SHALL BE NO GREATER THAN 5 LBS. LEVER-OPERATED, PUSH-TYPE AND ELECTRONICALLY CONTROLLED MECHANISMS ARE EXAMPLES OF ACCEPTABLE DESIGNS. SELF-CLOSING VALVES ARE ALLOWED, IF THE FAUCET REMAINS OPEN FOR AT LEAST 10 SECONDS.
12. MIRRORS SHALL BE MOUNTED WITH THE BOTTOM OF THE MIRROR'S REFLECTIVE SURFACE AT NOT MORE THAN 40" FROM THE FLOOR.
13. LOCATE TOWEL, SANITARY NAPKIN, AND WASTE RECEPTACLES WITH ALL OPERABLE PARTS NOT MORE THAN 40 INCHES FROM THE FLOOR.
14. LOCATE TOILET TISSUE DISPENSERS ON THE WALL WITHIN MINIMUM 7 INCHES TO MAXIMUM 9 INCHES IN FRONT OF THE WATER CLOSET MEASURED TO CONTROL OF DISPENSE. CONTINUOUS ROLL DISPENSER IS REQUIRED.

G. GRAB BARS

1. GRAB BARS SHALL BE LOCATED ON EACH SIDE, OR ONE SIDE AND THE BACK OF THE ACCESSIBLE TOILET STALL OR COMPARTMENT AND SHALL BE SECURELY ATTACHED 36 INCHES ABOVE AND PARALLEL TO THE FLOOR. MINIMUM 33" TO MAXIMUM 36" AFF.
2. GRAB BARS AT THE SIDE SHALL BE AT LEAST 42 INCHES LONG LOCATED 12" MAXIMUM FROM THE REAR WALL AND EXTENDING 54" MINIMUM FROM THE REAR WALL. GRAB BARS AT THE BACK SHALL BE NOT LESS THAN 36 INCHES LONG.
3. THE OUTSIDE DIAMETER OR WIDTH OF THE GRIPPING SURFACES SHAPE SHALL BE 1 1/4 INCHES TO 2 INCHES
4. IF THE GRAB BARS ARE MOUNTED ADJACENT TO A WALL, THE SPACE BETWEEN THE WALL AND THE GRAB BARS SHALL BE 1 1/2 INCHES.
5. A GRAB BAR ON ANY WALL OR OTHER SURFACE ADJACENT TO IT SHALL BE FREE OF ANY SHARP OR ABRASIVE ELEMENTS.
6. GRAB BARS SHALL NOT ROTATE WITHIN THEIR FITTINGS.
7. EDGES SHALL HAVE A MINIMUM RADIUS OF 1/8 INCH.
8. GRAB BAR, TUB, AND SHOWER SEATS, FASTENERS AND MOUNTING DEVICES SHALL BE DESIGNED FOR 250 LBS HORIZONTAL FORCE APPLIED AT ANY POINT ON THE GRAB BAR, FASTENER, MOUNTING DEVICE OR SUPPORTING STRUCTURE.

H. HAZARDS AND PROTRUDING OBJECTS

1. OBJECTS PROJECTING FROM WALLS (FOR EXAMPLE, TELEPHONES) WITH THEIR LEADING EDGES BETWEEN 27 INCHES AND 80 INCHES ABOVE THE FINISHED FLOOR SHALL PROJECT NO MORE THAN 4 INCHES INTO WALKS, HALLS, CORRIDORS, PASSAGEWAYS OR AISLES.
2. OBJECTS MOUNTED WITH THEIR LEADING EDGES AT OR BELOW 27 INCHES ABOVE THE FINISHED FLOOR MAY PROTRUDE ANY AMOUNT.
3. FREE-STANDING OBJECTS MOUNTED ON POSTS OR PYLONS MAY OVERHANG 4 INCHES MAXIMUM FROM 27 INCHES TO 80 INCHES ABOVE THE GROUND OR FINISHED FLOOR.
4. PROTRUDING OBJECTS SHALL NOT REDUCE THE CLEAR WIDTH OF AN ACCESSIBLE ROUTE OR MANEUVERING SPACE.
5. ANY OBSTRUCTION OVERHANGING A PEDESTRIAN WAY SHALL BE A MINIMUM OF 80 INCHES ABOVE THE WALKING SURFACE AS MEASURED TO THE BOTTOM OF THE OBSTRUCTION.
6. WALKS, HALLS, CORRIDORS, PASSAGEWAYS, AISLES OR OTHER CIRCULATION SPACES SHALL HAVE 80 INCHES MINIMUM CLEAR UNOBSTRUCTED HEAD ROOM (6'-8").
7. ABRUPT CHANGES IN LEVEL, EXCEPT BETWEEN A WALK OR SIDEWALK AND AN ADJACENT STREET OR DRIVEWAY, EXCEEDING 4 INCHES IN A VERTICAL DIMENSION, SUCH AS AT PLANTERS, LOCATED IN OR ADJACENT TO WALKS, SIDEWALKS, OR OTHER PEDESTRIAN WAYS SHALL BE IDENTIFIED BY CURBS PROJECTING AT LEAST 6 INCHES IN HEIGHT ABOVE THE WALK OR SIDEWALK SURFACE TO WARN THE BLIND OF A POTENTIAL DROP-OFF. WHEN A GUARDRAIL OR HANDRAIL IS PROVIDED, NO CURB IS OFF. WHEN A GUARDRAIL OR HANDRAIL IS PROVIDED, NO CURB IS PLUS OR MINUS ONE INCH ABOVE THE SURFACE OF THE WALK OR SIDEWALK AND, THE WALK IS 4.9 PERCENT OR LESS GRADIENT OR NO ADJACENT HAZARD EXISTS.
8. WALL SURFACES ADJACENT TO HANDRAILS SHALL BE FREE OF SHARP OR ABRASIVE ELEMENTS. (I.E., NO STUCCO.)

J. CLEAR FLOOR OR GROUND SPACE FOR WHEELCHAIRS

1. THE MINIMUM CLEAR FLOOR OR GROUND SPACE REQUIRED TO ACCOMMODATE A SINGLE, STATIONARY WHEELCHAIR AND OCCUPANT IS 30 INCHES X 48 INCHES. THE MINIMUM CLEAR FLOOR OR GROUND SPACE FOR WHEELCHAIRS MAY BE POSITIONED FOR FORWARD OR PARALLEL APPROACH TO AN OBJECT, UNLESS NOTED OTHERWISE. CLEAR FLOOR OR GROUND SPACE FOR WHEELCHAIRS MAY BE PART OF THE KNEE SPACE REQUIRED UNDER SOME OBJECTS.
2. ONE FULL UNOBSTRUCTED SIDE OF THE CLEAR FLOOR OR GROUND SPACE FOR A WHEELCHAIR SHALL ADJOIN OR OVERLAP, AN ACCESSIBLE ROUTE OR ADJOIN ANOTHER WHEELCHAIR CLEAR FLOOR SPACE. IF A CLEAR FLOOR SPACE IS LOCATED IN AN ALCOVE OR OTHERWISE CONFINED ON ALL OR APART OF THREE SIDES. ADDITIONAL MANEUVERING CLEARANCES SHALL BE PROVIDED.
3. PROVIDE AN ADDITIONAL 12 INCH WIDTH ON ONE SIDE FOR ALCOVES GREATER THAN 15 INCHES DEEP AND DESIGNED FOR FRONTAL APPROACH, EXCEPT AT DRINKING FOUNTAIN ALCOVES WHICH MAY BE A MAXIMUM OF 24" DEEP BEFORE REQUIRING THE ADDITIONAL 12" CLEAR WIDTH.
4. ALCOVES SHELL BE 36" WIDE MINIMUM WHERE THE DEPTH EXCEEDS 24 INCHES DEEP AND DESIGNED FOR FRONTAL APPROACH.
5. IF THE CLEAR FLOOR SPACE ONLY ALLOWS FORWARD APPROACH TO AN OBJECT, THE MAXIMUM HIGH FORWARD REACH ALLOWED SHALL BE 48 INCHES AND THE LOW SIDE REACH SHALL BE NO LESS THAN 15 INCHES ABOVE THE FLOOR. IF THE HIGH FORWARD REACH IS OVER AN OBSTRUCTION, THE HORIZONTAL DIMENSION OF THE OBSTRUCTION SHALL BE LESS THAN 25 INCHES. THE MAXIMUM HIGH FORWARD REACH ALLOWED SHALL THEN BE 44 INCHES WHEN THE HORIZONTAL DIMENSION OF THE OBSTRUCTION IS BETWEEN 20 INCHES AND 25 INCHES.
6. IF THE CLEAR FLOOR SPACE ALLOWS PARALLEL APPROACH BY A PERSON IN A WHEELCHAIR, THE MAXIMUM HIGH SIDE REACH ALLOWED SHALL BE 48 INCHES AND THE LOW SIDE REACH SHALL BE NO LESS THAN 15 INCHES ABOVE THE FLOOR. SIDE REACH IS ALLOWED OVER AN OBSTRUCTION PROVIDED THE HORIZONTAL DIMENSION OF THE OBSTRUCTION DOES NOT EXCEED 24 INCHES AND MAXIMUM HIGH REACH OVER A 24 INCH OBSTRUCTION SHALL THEN BE 46 INCHES.

Architect:

ARCHITECT OF RECORD:
BRR ARCHITECTURE, INC
8131 METCALF AVE
SUITE 300
OVERLAND PARK, KS 66204

www.brrarch.com

TEL: 913-262-9095
FAX: 913-262-9044

COPYRIGHT NOTICE

This drawing was prepared for use on a specific site contemporaneously with its issue date and it is not suitable for use on a different project site or at a later time. Use of this drawing for reference or example on another project requires the services of properly licensed architects and engineers. Reproduction of this drawing for reuse on another project is not authorized and may be contrary to the law.

Engineer:

Project Owner:

NIKE, Inc.
One Bowerman Drive
Beaverton, OR 97005
(503) 671-6453
www.nike.com

Project Address:

NIKE FACTORY STORE
WATERFORD LAKES
SHOPPING CENTER
449 N. ALAFAYA TRAIL
ORLANDO, FL 32828
TEMPLATE ISSUE DATE: 11/28/2018

Fixture Package:

UNITE

Stamp:

NOT FOR CONSTRUCTION

Issued For:

PERMIT/BID

Issue Date:

11/06/2020

Revisions:

NO.	REASON	DATE

PROJECT MANAGER:
KH
CHECKED BY:

DRAWN BY:
RAN

Project Number:

62301411

Sheet Title:

ACCESSIBILITY NOTES & DETAILS

Sheet Number:

CS4.0

OFFICE

ITEM	OWNER FURNISHED	OWNER INSTALLED	LANDLORD FURNISHED	LANDLORD INSTALLED	TENANT CONTRACTOR FURNISHED	TENANT CONTRACTOR INSTALLED	VENDOR FURNISHED	VENDOR INSTALLED	EXISTING	NOT APPLICABLE	REMARKS
MILLWORK AND SHELVING					●	●					
WHITE BOARD/ CORK BOARD	●					●					
COMPUTER EQUIPMENT	●	●									
FILE CABINETS	●	●									
COPYING MACHINE	●	●									
SAFE	●							●			
OVERRIDE PANEL					●	●	●				BY TENANT CONTRACTOR THRU OWNER'S VENDOR CSUSA
KEY BOX	●							●			TENANT CONTRACTOR TO PROVIDE PLYWOOD BACKING

AV ROOM

ITEM	OWNER FURNISHED	OWNER INSTALLED	LANDLORD FURNISHED	LANDLORD INSTALLED	TENANT CONTRACTOR FURNISHED	TENANT CONTRACTOR INSTALLED	VENDOR FURNISHED	VENDOR INSTALLED	EXISTING	NOT APPLICABLE	REMARKS
MILLWORK AND SHELVING					●	●					
AUDIO & VISUAL EQUIPMENT RACK							●	●			TENANT CONTRACTOR TO INSTALL POWER AND DATA CONDUIT. SEE ELEC DWG.
PHONE BOARD (KRONE FRAME)					●	●					

MECHANICAL

ITEM	OWNER FURNISHED	OWNER INSTALLED	LANDLORD FURNISHED	LANDLORD INSTALLED	TENANT CONTRACTOR FURNISHED	TENANT CONTRACTOR INSTALLED	VENDOR FURNISHED	VENDOR INSTALLED	EXISTING	NOT APPLICABLE	REMARKS
ROOFTOP UNITS AND CURBS						●	●				BY TENANT CONTRACTOR THRU OWNER'S HVAC NATIONAL ACCOUNT
EXHAUST FANS					●	●					
RECEIVING UNIT HEATER									●		
ENTRANCE AIR CURTAIN									●		
ROOF PENETRATIONS					●	●					BY TENANT CONTRACTOR THRU LANDLORD APPROVED ROOFING CONTRACTOR
VAV DIFFUSERS						●	●				BY TENANT CONTRACTOR THRU OWNER'S EMS VENDOR
OTHER AIR DEVICES - ALL					●	●					
DAMPERS - ALL					●	●					
DAMPER ACTUATOR						●	●				BY TENANT CONTRACTOR THRU OWNER'S EMS VENDOR
TEMPORARY RTU THERMOSTATS						●	●				BY TENANT CONTRACTOR THRU OWNER'S HVAC NATIONAL ACCOUNT
METAL DUCTWORK					●	●					
FABRIC DUCTWORK						●	●				BY TENANT CONTRACTOR THRU OWNER'S FABRIC DUCT NATIONAL ACCOUNT
DUCTWORK INSULATION					●	●					
DUCT SMOKE DETECTORS									●		BY FIRE ALARM CONTRACTOR
TESTING AND BALANCING (TAB)					●	●					
AIR FILTERS					●	●					
BIRDSCREENS					●	●					

PLUMBING

ITEM	OWNER FURNISHED	OWNER INSTALLED	LANDLORD FURNISHED	LANDLORD INSTALLED	TENANT CONTRACTOR FURNISHED	TENANT CONTRACTOR INSTALLED	VENDOR FURNISHED	VENDOR INSTALLED	EXISTING	NOT APPLICABLE	REMARKS
DOM. WATER TO TENANT SPACE									●		
SEWER LINE TO TENANT SPACE									●		
GAS METER									●		
GAS PIPING					●	●					
SEWER & VENT LINES					●	●					
HOT & COLD WATER LINES					●	●					
CONDENSATE PIPING					●	●					
PIPING INSULATION - ALL					●	●					
PIPING ACCESSORIES - ALL					●	●					
FLOOR DRAINS					●	●					
LAVATORIES					●	●					
JANITOR'S SINK					●	●					
KITCHENETTE SINK					●	●					
DRINKING FOUNTAIN					●	●					
WATER HEATER					●	●					
EXPANSION TANK					●	●					
WATER CLOSETS & URINALS					●	●					
WATER SUBMETER					●	●					
THERMOSTATIC MIXING VALVE					●	●					
TRAP PRIMERS & DCVS					●	●					
FLOOR AND WALL CLEANOUTS					●	●					
WATER HAMMER ARRESTER					●	●					
WATER SHUTOFF VALVE					●	●					

ELECTRICAL

ITEM	OWNER FURNISHED	OWNER INSTALLED	LANDLORD FURNISHED	LANDLORD INSTALLED	TENANT CONTRACTOR FURNISHED	TENANT CONTRACTOR INSTALLED	VENDOR FURNISHED	VENDOR INSTALLED	EXISTING	NOT APPLICABLE	REMARKS
TENANT ELEC. SERVICE CONDUIT									●		
TENANT ELEC. SERVICE WIRE									●		
ELECTRIC UTILITY METER									●		
ELECTRICAL PANELS						●	●				BY TENANT CONTRACTOR THRU OWNER'S IFS NATIONAL ACCOUNT
TRANSFORMER						●	●				BY TENANT CONTRACTOR THRU OWNER'S IFS NATIONAL ACCOUNT
DISCONNECT SWITCHES					●	●					
RECEPTACLES					●	●					
WATTSTOPPER LIGHTING SYSTEM						●	●				BY TENANT CONTRACTOR THRU OWNER'S EMS VENDOR
LOW VOLTAGE LIGHT SWITCHES						●	●				BY TENANT CONTRACTOR THRU OWNER'S EMS VENDOR
LINE VOLTAGE LIGHT SWITCHES					●	●					
LIGHT FIXTURES WITH LAMPS						●	●				BY TENANT CONTRACTOR THRU OWNER'S LIGHTING VENDOR
ARCHITECTURAL LIGHTING						●	●				BY TENANT CONTRACTOR THRU OWNER'S BUSSTRUT VENDOR
FLOOR BOXES AND POKE THRUS						●	●				
PLUGMOLD						●	●				BY TENANT CONTRACTOR THRU OWNER'S LIGHTING VENDOR
TELEPHONE CONDUIT					●	●					
DATA AND WAP CONDUIT					●	●					
TRAFFIC COUNTER CONDUIT					●	●					
SATELLITE SYSTEM CONDUIT					●	●					
A/V CONDUIT					●	●					
SECURITY DEVICE CONDUIT					●	●					
EMS DEVICE CONDUIT					●	●					
TELEPHONE WIRING							●	●			THRU OWNER'S IT VENDOR
DATA AND WAP WIRING							●	●			THRU OWNER'S IT VENDOR
TRAFFIC COUNTER WIRING							●	●			THRU OWNER'S SECURITY VENDOR
SATELLITE SYSTEM WIRING							●	●			THRU OWNER'S IT VENDOR
A/V WIRING							●	●			THRU OWNER'S AUDIO VENDOR
SECURITY DEVICE WIRING							●	●			THRU OWNER'S SECURITY VENDOR
EMS DEVICE WIRING						●	●				BY TENANT CONTRACTOR THRU OWNER'S EMS VENDOR
TIME CLOCK							●	●			THRU OWNER'S IT VENDOR
SURGE PROTECTORS						●	●				BY TENANT CONTRACTOR THRU OWNER'S IFS NATIONAL ACCOUNT
EMS PANEL						●	●				BY TENANT CONTRACTOR THRU OWNER'S IFS NATIONAL ACCOUNT
KW METER						●	●				BY TENANT CONTRACTOR THRU OWNER'S IFS NATIONAL ACCOUNT
DUCT SMOKE DETECTOR POWER									●		BY FIRE ALARM CONTRACTOR
WALL TEMPERATURE SENSORS						●	●				BY TENANT CONTRACTOR THRU OWNER'S EMS VENDOR
AV DUCT TEMPERATURE SENSOR						●	●				BY TENANT CONTRACTOR THRU OWNER'S EMS VENDOR
VAV DIFFUSER THERMOSTATS						●	●				BY TENANT CONTRACTOR THRU OWNER'S EMS VENDOR
HUMIDITY SENSORS						●	●				BY TENANT CONTRACTOR THRU OWNER'S EMS VENDOR
CO2 SENSORS						●	●				BY TENANT CONTRACTOR THRU OWNER'S EMS VENDOR
EXHAUST FAN RELAYS						●	●				BY TENANT CONTRACTOR THRU OWNER'S EMS VENDOR
UNIT HEATER RELAYS									●		
MINIMUM O/A RELAY						●	●				BY TENANT CONTRACTOR THRU OWNER'S EMS VENDOR
OUTSIDE SENSOR ASSEMBLY						●	●				BY TENANT CONTRACTOR THRU OWNER'S EMS VENDOR
UNIVERSAL CONTROL MODULE						●	●				BY TENANT CONTRACTOR THRU OWNER'S EMS VENDOR
WATER SHUTOFF SWITCH / COVER					●	●					

FIRE ALARM

ITEM	OWNER FURNISHED	OWNER INSTALLED	LANDLORD FURNISHED	LANDLORD INSTALLED	TENANT CONTRACTOR FURNISHED	TENANT CONTRACTOR INSTALLED	VENDOR FURNISHED	VENDOR INSTALLED	EXISTING	NOT APPLICABLE	REMARKS
TENANT FA CONTROL PANEL										●	
REMOTE POWER SUPPLY					●	●					
ANNUNCIATOR PANEL										●	
MANUAL PULL STATION										●	
NOTIFICATION APPLIANCES					●	●					
DUCT SMOKE DETECTORS					●	●					
REMOTE TEST STATIONS					●	●					
TAMPER AND FLOW SWITCHES									●		
FIRE ALARM WIRING - ALL					●	●					

FIRE SPRINKLER

ITEM	OWNER FURNISHED	OWNER INSTALLED	LANDLORD FURNISHED	LANDLORD INSTALLED	TENANT CONTRACTOR FURNISHED	TENANT CONTRACTOR INSTALLED	VENDOR FURNISHED	VENDOR INSTALLED	EXISTING	NOT APPLICABLE	REMARKS
FIRE SPRINKLER MAINS			●	●							
FIRE WATER TO TENANT SPACE			●	●							
FIRE SPRINKLERS					●	●					
FIRE SPRINKLER PIPING					●	●					

SALES

ITEM	OWNER FURNISHED	OWNER INSTALLED	LANDLORD FURNISHED	LANDLORD INSTALLED	TENANT CONTRACTOR FURNISHED	TENANT CONTRACTOR INSTALLED	VENDOR FURNISHED	VENDOR INSTALLED	EXISTING	NOT APPLICABLE	REMARKS
SALES FLOOR FIXTURE (INCLUDED CASHWRAP) SEE ELEC DWG.							●	●			TENANT CONTRACTOR TO INSTALL POWER AND DATA OUTLET BEHIND FIXTURES AS NOTED.
WALL FIXTURE BACKING					●	●					PATCH AND REPAIR EXISTING GWB AS REQUIRED FOR NEW BACKING
FREESTANDING FOOTWEAR STRUCTURAL ANCHOR										●	
CASHWRAP ANTI-FATIGUE MAT	●					●					SEE SHEET A2.0. TENANT CONTRACTOR TO VERIFY MAT SIZE COORD. WITH BACKWRAP WALL LENGTH.
MIRRORS										●	
CENTER INITIATIVE FIXTURES										●	
BRAND BAND										●	
WOOD PLANKS - MAPLE										●	
DISPLAY WINDOW											
DISPLAY PLATFORM										●	
DISPLAY WALL PARTITION										●	
DISPLAY SOFFIT										●	
GRAPHIC TRACK										●	
GRAPHIC							●	●			
FLOORING AND DRIVE AISLE							●	●			TENANT CONTRACTOR CONTACT VENDOR AND INCLUDE FLOORING IN THE BID
SALES ENTRY FLOORING					●	●					TENANT CONTRACTOR TO INCLUDE FLOORING IN THE BID

FITTING ROOM

ITEM	OWNER FURNISHED	OWNER INSTALLED	LANDLORD FURNISHED	LANDLORD INSTALLED	TENANT CONTRACTOR FURNISHED	TENANT CONTRACTOR INSTALLED	VENDOR FURNISHED	VENDOR INSTALLED	EXISTING	NOT APPLICABLE	REMARKS
BENCH							●	●			
RETURN STATION/ SHELF							●	●			TENANT CONTRACTOR TO PROVIDE AND INSTALL BACKING
ADA GRAB BAR										●	
ADA SIGNAGE					●	●					
FLOORING					●	●					TENANT CONTRACTOR TO INCLUDE IN THE BID
MIRROR					●	●					
HANGER HOOKS						●	●	●			TENANT CONTRACTOR TO PROVIDE AND INSTALL BACKING
DOOR STOP					●	●					
FITTING ROOM DOOR					●	●	●				TENANT CONTRACTOR TO INCLUDE FITTING ROOM DOOR IN THE BID
FRAMED GRAPHIC							●	●			
3-WAY MIRROR										●	

RESTROOM(S)

ITEM	OWNER FURNISHED	OWNER INSTALLED	LANDLORD FURNISHED	LANDLORD INSTALLED	TENANT CONTRACTOR FURNISHED	TENANT CONTRACTOR INSTALLED	VENDOR FURNISHED	VENDOR INSTALLED	EXISTING	NOT APPLICABLE	REMARKS
ADA GRAB BAR					●	●					TENANT CONTRACTOR TO PROVIDE AND INSTALL BACKING
ADA SIGNAGE					●	●					
MIRROR					●	●					INSTALL CAULKING AROUND THE EDGE
DOOR HOOK					●	●					
MILLWORK AND SHELVING										●	
TOILET PAPER DISPENSER					●	●					
TOILET SEAT COVER DISPENSER					●	●					
SOAP DISPENSER					●	●					
SHARP OBJECT CONTAINER					●	●					
HAND DRYER					●	●					
SANITARY BASKET					●	●					INSTALL IN WOMENS RESTROOM NEAR TOILET
FEMININE PRODUCT SIGN	●					●					INSTALL IN WOMENS RESTROOM NEAR TOILET
AIR FRESHENER					●	●					INSTALL ABOVE DOOR

RESTROOM VESTIBULE / EGRESS CORRIDOR

ITEM	OWNER FURNISHED	OWNER INSTALLED	LANDLORD FURNISHED	LANDLORD INSTALLED	TENANT CONTRACTOR FURNISHED	TENANT CONTRACTOR INSTALLED	VENDOR FURNISHED	VENDOR INSTALLED	EXISTING	NOT APPLICABLE	REMARKS
HI-LO DRINKING FOUNTAIN					●	●					TENANT CONTRACTOR TO PROVIDE AND INSTALL BACKING

JANITOR CLOSET

ITEM	OWNER FURNISHED	OWNER INSTALLED	LANDLORD FURNISHED	LANDLORD INSTALLED	TENANT CONTRACTOR FURNISHED	TENANT CONTRACTOR INSTALLED	VENDOR FURNISHED	VENDOR INSTALLED	EXISTING	NOT APPLICABLE	REMARKS
MOP HOLDER					●	●					
MILLWORK AND SHELVING					●	●					
FACILITIES BOARD	●					●					
BACKPACK VACUUM	●					●					TENANT CONTRACTOR TO PROVIDE AND INSTALL BACKING
GLOVE DISPENSER					●	●					

EMPLOYEE LOUNGE

ITEM	OWNER FURNISHED	OWNER INSTALLED	LANDLORD FURNISHED	LANDLORD INSTALLED	TENANT CONTRACTOR FURNISHED	TENANT CONTRACTOR INSTALLED	VENDOR FURNISHED	VENDOR INSTALLED	EXISTING	NOT APPLICABLE	REMARKS
MILLWORK AND SHELVING					●	●					
REFRIGERATOR	●	●									TENANT CONTRACTOR TO SUPPLY POWER. SEE ELEC DWG.
MICROWAVE	●					●					TENANT CONTRACTOR TO SUPPLY POWER. SEE ELEC DWG.
WATER DISPENSER							●	●			
VENDING MACHINES	●	●									TENANT CONTRACTOR TO SUPPLY POWER. SEE ELEC DWG.
TELEVISION & VCR	●					●					TENANT CONTRACTOR TO SUPPLY POWER & DATA. SEE ELEC DWG.
TELEVISION BRACKET	●					●					
COMPUTER EQUIPMENT	●					●					TENANT CONTRACTOR TO SUPPLY POWER & DATA. SEE ELEC DWG.
LOCKERS	●					●					TENANT CONTRACTOR TO PROVIDE BLOCKING
BREAK TABLE & CHAIRS	●					●					
FLOOR FINISH					●	●					
WALL FINISH					●	●					
LOUNGE SINK					●	●					SEE PLUMBING DRAWINGS
WALL GRAPHICS							●	●			
PAPER TOWEL DISPENSER					●	●					
MVP BOARD/ MVP BOX	●					●					
COAT RACK	●					●					TENANT CONTRACTOR TO PROVIDE BLOCKING
RADIO DOCKING STATION					●	●					TENANT CONTRACTOR TO PROVIDE BLOCKING
STORE BONUS BOARD	●					●					
COMMUNICATION BOARD	●					●					TENANT CONTRACTOR TO PROVIDE BLOCKING
SCHEDULE BOARD	●					●					TENANT CONTRACTOR TO PROVIDE BLOCKING
FIRST AID KIT					●	●					
LP BOARD	●					●					

STOCK ROOM

ITEM	OWNER FURNISHED	OWNER INSTALLED	LANDLORD FURNISHED	LANDLORD INSTALLED	TENANT CONTRACTOR FURNISHED	TENANT CONTRACTOR INSTALLED	VENDOR FURNISHED	VENDOR INSTALLED	EXISTING	NOT APPLICABLE	REMARKS
MILLWORK AND SHELVING							●	●			
MOBILE STORAGE							●	●			
STORAGE MANAGEMENT SYSTEM	●					●					
HANGER MANAGEMENT SYSTEM	●					●					
RF LOCATIONS PER PLAN	●					●					TENANT CONTRACTOR TO SUPPLY IT POWER AND DATA PORT. SEE ELEC DWG.
STOCK ROOM DOOR BELL					●	●					TYP. - (2) BELL LOCATIONS
SHARP OBJECT CONTAINER					●	●					

GENERAL CONSTRUCTION

ITEM	OWNER FURNISHED	OWNER INSTALLED	LANDLORD FURNISHED	LANDLORD INSTALLED	TENANT CONTRACTOR FURNISHED	TENANT CONTRACTOR INSTALLED	VENDOR FURNISHED	VENDOR INSTALLED	EXISTING	NOT APPLICABLE	REMARKS
1.0 - FOUNDATION											
FOOTING									●		
CONCRETE SLAB									●		
CONCRETE TRENCHING & PATCHING						●	●				AS REQUIRED PER PLAN; TENANT CONTRACTOR TO X-RAY SLAB IF REQUIRED BY LANDLORD
2.0 - FLOORING											
CARPET					●	●					
CONCRETE FLR SEALER					●	●					
SALES STAIN AND POLISH CONC.					●	●	●	●			BY TENANT CONTRACTOR THRU OWNER APPROVED VENDOR; SEE VENDOR LIST ON FINISH PLAN
SAFETY YELLOW PAINT										●	
FITTING RM FLOORING					●	●					
ENTRY MAT	●					●					TENANT CONTRACTOR TO UNPACK MATS AND SET IN PLACE
BASE					●	●					
3.0 - PARTITION											
EXTERIOR WALL STUD									●		
EXTERIOR INSULATION									●		
EXTERIOR WALL FINISH									●		
DEMISING WALL STUD									●		
STOREFRONT GLAZING SYSTEM			●	●							
DEMISING INSULATION									●		
DEMISING DRY WALL					●	●					TENANT CONTRACTOR TO INSTALL FIXTURE BACKING PRIOR TO DRY WALL INSTALLATION.
INTERIOR WALL STUD, INSULATION (IF APPLICABLE), DRYWALL, FINISH					●	●					
FURRING STRIPS					●	●					
METAL STRAP RUNNER CHANNEL					●	●					
CORNER GUARD					●	●					
4.0 - CEILING											
GWB SOFFIT & HEADERS					●	●					
SUSP / LAY-IN CEILING					●	●					
5.0 - ROOF											
ROOF DECK									●		TENANT CONTRACTORTO PAINT BOTTOM OF ROOF DECK AT OPEN CEILING AREAS.
ROOF PATCHING					●	●					TENANT CONTRACTOR TO USE LANDLORD REQUIRED ROOFING SUB CONTRACTOR
6.0 - SIGNAGE											
STOREFRONT SIGN BAND									●		
STOREFRONT SIGNAGE							●	●			TENANT CONTRACTOR TO PROVIDE AND INSTALL POWER AND COORDINATE WITH SIGN VENDOR.
GRAPHIC							●	●			
SIGNAGE BACKING					●	●			●		
BACKWRAP JDI SIGNAGE										●	
CEILING HANG SIGN										●	
ADA SIGNAGE					●	●					
ENTRY NO SMOKING SIGN					●	●					
8.0 - DOOR											
EXTERIOR DOOR			●	●					●		
INTERIOR DOOR					●	●					
DOOR HARDWARE					●	●					BEST 7-PIN CYLINDERS
DOOR CORE	●					●					TENANT CONTRACTOR TO PROVIDE TEMPORARY LOCK
FITTING ROOM DOOR					●	●	●				BY TENANT CONTRACTOR THRU OWNER VENDOR - CUSTOM STOREFRONTS

SPECIALTY

ITEM	OWNER FURNISHED	OWNER INSTALLED	LANDLORD FURNISHED	LANDLORD INSTALLED	TENANT CONTRACTOR FURNISHED	TENANT CONTRACTOR INSTALLED	VENDOR FURNISHED	VENDOR INSTALLED	EXISTING	NOT APPLICABLE	REMARKS
P.O.S. SYSTEM	●					●					BY TENANT CONTRACTOR THRU OWNER'S VENDOR
AUDIO SYSTEMS							●	●			COORDINATE INSTALLATION WITH TENANT CONTRACTOR
SECURITY SYSTEMS							●	●			
TELEPHONE SYSTEM											
TELEPHONE EQUIPMENT							●	●			
(2) RECYCLE CONTAINERS	●	●									

LIFE SAFETY

ITEM	OWNER FURNISHED	OWNER INSTALLED	LANDLORD FURNISHED	LANDLORD INSTALLED	TENANT CONTRACTOR FURNISHED	TENANT CONTRACTOR INSTALLED	VENDOR FURNISHED	VENDOR INSTALLED	EXISTING	NOT APPLICABLE	REMARKS
FIRE EXTINGUISHERS					●	●					
DETEX ALARM					●	●					

SITE WORK

ITEM	OWNER FURNISHED	OWNER INSTALLED	LANDLORD FURNISHED	LANDLORD INSTALLED	TENANT CONTRACTOR FURNISHED	TENANT CONTRACTOR INSTALLED	VENDOR FURNISHED	VENDOR INSTALLED	EXISTING	NOT APPLICABLE	REMARKS
PARKING STALL AND SIGNAGE									●		
LEV PARKING										●	
NO-SMOKING SIGNAGE					●	●					TENANT CONTRACTOR TO COORDINATE WITH LANDLORD FOR APPROVAL PRIOR TO INSTALLATION.
BIKE RACK										●	
EXTERIOR PAVING									●		
CURB AND GUTTER									●		

NOTE: TENANT CONTRACTOR TO REVIEW WRITTEN SPECIFICATIONS FOR LEED DOCUMENTATION RESPONSIBILITIES

Architect:

brr

ARCHITECT OF RECORD:
BRR ARCHITECTURE, INC
8131 METCALF AVE
SUITE 300
OVERLAND PARK, KS 66204

www.brrarch.com

TEL: 913-262-9095
FAX: 913-262-9044

COPYRIGHT NOTICE

This drawing was prepared for use on a specific site contemporaneously with its issue date and it is not suitable for use on a different project site or at a later time. Use of this drawing for another project or on another project requires the services of properly licensed architects and engineers. Reproduction of this drawing for reuse on another project is not authorized and may be contrary to the law.

Engineer:

Project Owner:

NIKE, Inc.
One Bowerman Drive
Beaverton, OR 97005
(503) 671-6453
www.nike.com

Project Address:

NIKE FACTORY STORE
WATERFORD LAKES
SHOPPING CENTER
449 N. ALAFAYA TRAIL
ORLANDO, FL 32828
TEMPLATE ISSUE DATE: 11/28/2018

Fixture Package:

UNITE

Stamp:

NOT FOR CONSTRUCTION

Issued For:

PERMIT/BID

Issue Date:

11/06/2020

Revisions:

NO.	REASON	DATE

PROJECT MANAGER:
KH
CHECKED BY:
DRAWN BY:
RAN

Project Number:

62301411

Sheet Title:

RESPONSIBILITY MATRIX

Sheet Number:

CS5.0

LEED SCORE CARD

NFS NA LEED V4 VP
LEED v4 ID+C: Retail Scorecard

11/4/2020

Project Name: Waterford Lakes (Orlando), FL
Based On: N/A

Total Sq Ft:
HVAC Type

Possible	Prototype Yes	Prototype No	Individual Yes	Individual No			Primary Responsible Party	Credit Status
						PROJECT INFORMATION FORM		
						Minimum Program Requirements	Nike PM / RWDI	Open
						INTEGRATIVE PROCESS		
2		1		2	D	**Integrative Process**		Closed
2				2		Total Points for Integrative Process		
						LOCATION & TRANSPORTATION		
16				16	D	**LEED for Neighborhood Development Location**		Closed
4	2	3	3		D	**Surrounding Density and Diverse Uses**	RWDI	Open
7			7		D	**Access to Quality Transit**	RWDI	Closed
1				1	D	**Bicycle Facilities**		Closed
5		2			D	**Reduced Parking Footprint**	Nike PM / RWDI	Closed
16	2	3	12	19		Total Points for Location & Transportation		
						WATER EFFICIENCY		
2	Y				D	**Indoor Water Use Reduction, 20%**	HEI / RWDI	Open
2	2				D	**Indoor Water Use Reduction, 25%**	HEI / RWDI	Open
2	2				D	**Indoor Water Use Reduction, 30%**	HEI / RWDI	Open
2		2			D	**Indoor Water Use Reduction, 35%**	HEI / RWDI	Open
2		2			D	**Indoor Water Use Reduction, 40%**	HEI / RWDI	Open
2				2	D	**Indoor Water Use Reduction, 45%**		Closed
1				2	D	**Indoor Water Use Reduction, Appliance and Process Water**		Closed
12	4	4		4		Total Points for Water Efficiency		
						ENERGY & ATMOSPHERE		
2	Y				D	**Fundamental Commissioning and Verification**	RWDI	Open
2	Y				D	**Minimum Energy Performance**	HEI	Open
2	Y				D	**Fundamental Refrigerant Management**	HEI	Open
2	4			1	D	**Enhanced Commissioning**	RWDI	Open
2				2	D	**Optimize Energy Performance: Building Envelope, Opaque**		Closed
2				2	D	**Optimize Energy Performance: Building Envelope, Glazing**		Closed
2				2	D	**Optimize Energy Performance: HVAC Equipment Efficiency**		Closed
2	2				D	**Optimize Energy Performance: HVAC Zoning and Controls**	HEI	Open
1	1				D	**Optimize Energy Performance: Interior Lighting Power Reduction, 10%**	HEI	Open
1	1				D	**Optimize Energy Performance: Interior Lighting Power Reduction, 15%**	HEI	Open
1		1			D	**Optimize Energy Performance: Interior Lighting Power Reduction, 20%**	HEI	Open
1		1			D	**Optimize Energy Performance: Interior Lighting Power Reduction, 25%**	HEI	Open
1				1	D	**Optimize Energy Performance: Interior Lighting, Daylighting Controls**		Closed
1				1	D	**Optimize Energy Performance: Interior Lighting, Occupancy Sensors**		Closed
1	1				D	**Optimize Energy Performance: Equipment & Appliances, 70% ENERGY STAR**	Nike / RWDI	Open
1	1				D	**Optimize Energy Performance: Equipment & Appliances, 90% ENERGY STAR**	Nike / RWDI	Open
2	1			1	D	**Advanced Energy Metering**	HEI / RWDI	Open
3				3	D	**Renewable Energy Production**		Closed
3				1	D	**Enhanced Refrigerant Management**		Closed
2	2				C	**Green Power and Carbon Offsets**	Nike PM / RWDI	Open
38	13	2		39		Total Points for Energy & Atmosphere		
						MATERIALS & RESOURCES		
2	Y				D	**Storage and Collection of Recyclables**	BRR / RWDI	Open
2	Y				C	**Construction and Demolition Waste Management Planning**	GC	Open
1				1	D	**Long-term Commitment**	Nike PM / RWDI	Closed
5				5	D	**Interiors Life-Cycle Impact Reduction**	RWDI	Closed
2	1			1	C	**Building Product Disclosure and Optimization - Environmental Product Declarations**	GC	Open
2	1			1	C	**Building Product Disclosure and Optimization - Sourcing of Raw Materials**	GC	Open
2	1			1	C	**Building Product Disclosure and Optimization - Material Ingredients**	GC	Open
2	1	1			C	**Construction and Demolition Waste Management**	GC	Open
14	4	1		9		Total Points for Materials & Resources		
						INDOOR ENVIRONMENTAL QUALITY		
2	Y				D	**Minimum Indoor Air Quality Performance**	HEI	Open
2	Y				D	**Environmental Tobacco Smoke Control**	Nike PM / RWDI	Open
3	2			1	D	**Enhanced Indoor Air Quality Strategies**	HEI	Open
3	1				C	**Low-Emitting Materials**	GC	Open
1	1				C	**Construction Indoor Air Quality Management Plan**	GC	Open
2				2	C	**Indoor Air Quality Assessment**		Closed
1	1				D	**Thermal Comfort**	Nike / HEI	Open
2	1			1	D	**Interior Lighting**		Open
3				3	D	**Daylight**		Closed
1				1	D	**Quality Views**		Closed
19	8			8		Total Points for Indoor Environmental Quality		
						INNOVATION (EP = Exemplary Performance)		
1	1				C	**Green Cleaning Policy**	Nike / RWDI	Open
1	1				C	**EP: Construction and Demolition Waste Management (both options) OR LEM**	GC / RWDI	Open
1	1				C	**Purchasing - Lamps**	CL / RWDI	Open
1	1				C	**Water Restoration Certificates (Pilot)**	Nike PM / RWDI	Open
1	1				C	**Occupant comfort survey**	Nike / RWDI	Open
1	1				C	**LEED® Accredited Professional**	RWDI	Open
6	6					Total Points for Innovation		
						REGIONAL PRIORITY		
1	1				C	**Indoor Water Use Reduction - 2 Point Threshold**	RWDI	Open
1	1				C	**Surrounding Density and Diverse Uses - 2 Point Threshold**	RWDI	Open
1	1				C	**Thermal Comfort - 1 Point Threshold**	RWDI	Open
1		1			C	**Access to Quality Transit - 1 Point Threshold**	RWDI	Closed
					C	**Reduced Parking Footprint - 1 Point Threshold**		
					C	**Renewable Energy Production - 1 Point Threshold**		
4	3					Total Points for Regional Priority		

	Prototype			Individual	
110	40	10	13	81	**Point Sub-total**
	40			9	**Point Grand Total (Certified: 40-49, Silver: 50-59, Gold: 60-79, Platinum: 80+)**

Certified	Current Level

NOT FOR CONSTRUCTION
FOR REFERENCE ONLY

Architect:

brr

ARCHITECT OF RECORD:
BRR ARCHITECTURE, INC
8131 METCALF AVE
SUITE 300
OVERLAND PARK, KS 66204

www.brrarch.com

TEL: 913-262-9095
FAX: 913-262-9044

COPYRIGHT NOTICE

This drawing was prepared for use on a specific site contemporaneously with its issue date and it is not suitable for use on a different project site or at a later time. Use of this drawing on another project or reuse on another project requires the services of properly licensed architects and engineers. Reproduction of this drawing for reuse on another project is not authorized and may be contrary to the law.

Engineer:

Project Owner:

NIKE, Inc.
One Bowerman Drive
Beaverton, OR 97005
(503) 671-6453
www.nike.com

Project Address:

NIKE FACTORY STORE
WATERFORD LAKES
SHOPPING CENTER
449 N. ALAFAYA TRAIL
ORLANDO, FL 32828
TEMPLATE ISSUE DATE: 11/28/2018

Fixture Package:

UNITE

Stamp:

NOT FOR CONSTRUCTION
FOR REFERENCE ONLY

Issued For:

PERMIT/BID

Issue Date:

11/06/2020

Revisions:

NO.	REASON	DATE
-		

PROJECT MANAGER:
KH

CHECKED BY:

DRAWN BY:
RAN

Project Number:

62301411

Sheet Title:

LEED SCORE CARD

Sheet Number:

CS6.0

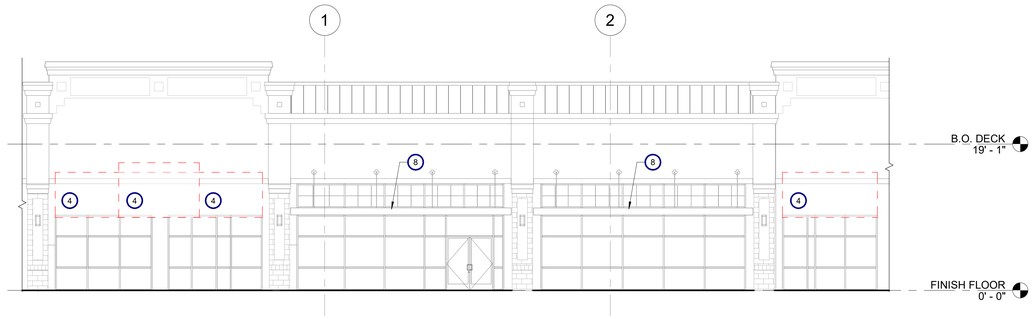

2 **DEMOLITION ELEVATION**
1/8" = 1'-0"

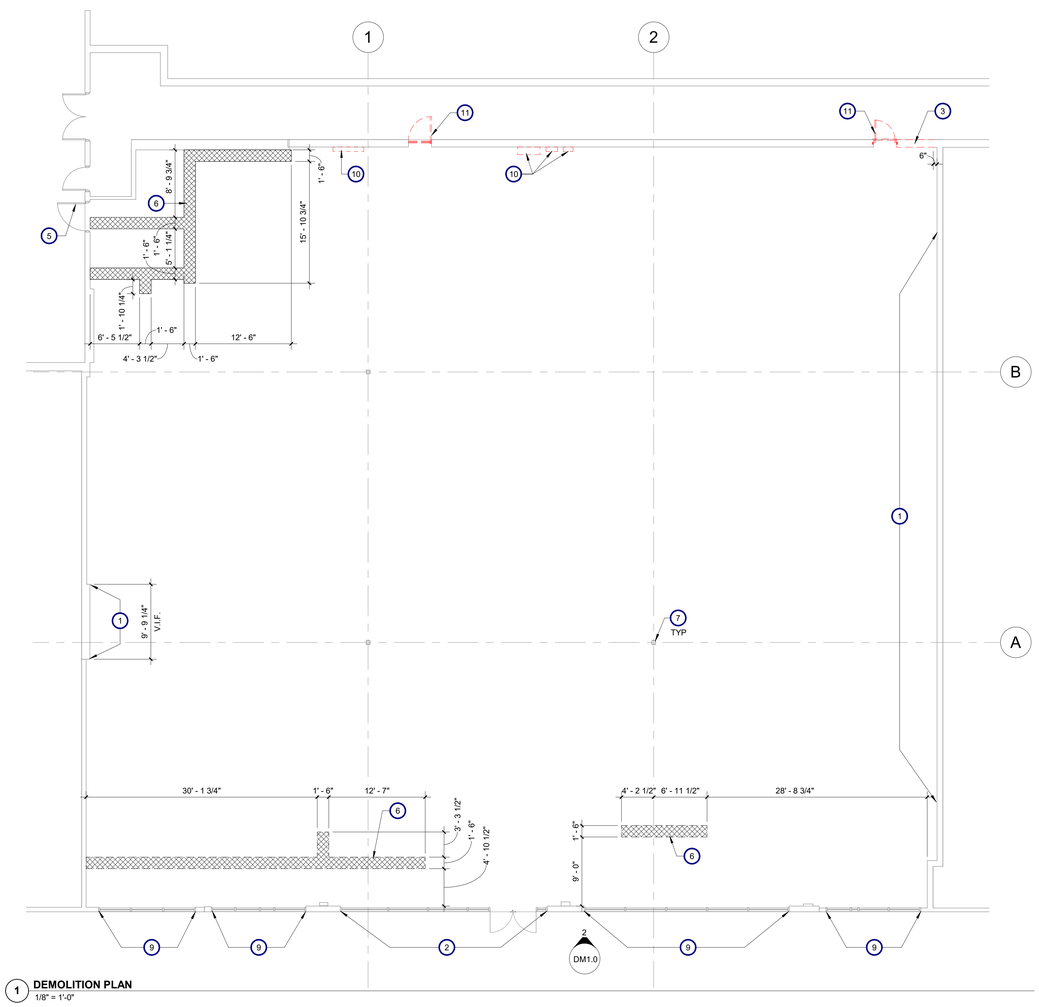

1 **DEMOLITION PLAN**
1/8" = 1'-0"

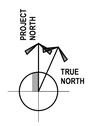

SHEET NOTES

A. TENANT CONTRACTOR TO VERIFY COMPLETE SCOPE OF DEMOLITION PRIOR TO BIDDING. ALL REQUIRED DEMOLITION TO BE INCLUDED IN THE BASE BID. DEMOLITION PLAN IS ONLY AN ESTIMATE OF SCOPE OF WORK.

B. REMOVE ALL EXISTING FIXTURES ON EXISTING DEMISING WALLS - REPAIR, REPLACE OR INSTALL NEW 5/8" TYPE "X" GYPSUM BOARD. IF APPLICABLE, MAINTAIN FIRE RATING.

C. REMOVE ANY EXISTING FIXTURES AND MATERIALS IN SPACE. REMOVE GLUE AND THIN SET COMPOUNDS.

D. TENANT CONTRACTOR TO VERIFY CONDITION OF ANY EXISTING DOORS AND DOOR HARDWARE TO REMAIN. NOTIFY NIKE'S CONSTRUCTION PROJECT MANAGER IF ANY DISCREPANCY EXISTS.

E. SEE MECHANICAL AND ELECTRICAL DRAWINGS FOR ADDITIONAL DEMOLITION WORK.

F. REMOVE ALL DEMOLITION MATERIALS AND DEBRIS PRIOR TO NEW CONSTRUCTION ACTIVITIES.

G. TENANT CONTRACTOR TO REMOVE ALL FLOORING & SUB-FLOORING MATERIAL DOWN TO THE SLAB. TENANT CONTRACTOR TO BEAD BLAST EXISTING SLAB.

H. ALL NOTED CONDUITS, PIPING, MECHANICAL EQUIPMENT, AND ELECTRICAL EQUIPMENT TO BE DEMOLISHED. ANY EQUIPMENT CONSIDERED FOR RE-USE MUST HAVE OPERATING CONDITION VERIFIED BY CONTRACTOR AND APPROVED BY TENANT, LANDLORD AND BUILDING OFFICIAL.

J. EXCEPT FOR ITEMS OR MATERIALS INDICATED TO BE REUSED, SALVAGED, OR DETERMINED BY OWNER TO REMAIN THE OWNER'S PROPERTY, DEMOLISHED MATERIALS SHALL BECOME THE TENANT CONTRACTOR'S PROPERTY AND SHALL BE REMOVED FROM THE SITE. PROMPTLY DISPOSE OF DEMOLISHED MATERIALS. DO NOT ALLOW DEMOLISHED MATERIALS TO ACCUMULATE ON SITE. TRANSPORT DEMOLISHED MATERIALS OFF OWNER'S PROPERTY AND LEGALLY DISPOSE OF THEM TO ENSURE MINIMAL INTERFERENCE WITH ROADS, STREETS, WALKS, AND OTHER ADJACENT OCCUPIED AND USED FACILITIES. REMOVE AND TRANSPORT DEBRIS IN A MANNER THAT WILL PREVENT SPILLAGE ON ADJACENT SURFACES AND AREAS. SEE SPECIFICATION SHEETS FOR WASTE MANAGEMENT PLAN.

K. TENANT CONTRACTOR TO NOTIFY NIKE'S CONSTRUCTION PROJECT MANAGER IMMEDIATELY OF ANY UNSAFE MATERIALS OR CONDITIONS REVEALED DURING DEMOLITION.

LEGEND

EXISTING TO REMAIN

DEMOLISHED

PLUMBING / UTILITY / CONDUIT TRENCH

KEYNOTES

1. REMOVE EXISTING DRYWALL FINISH TO INSTALL NEW FIXTURE BACKING AS NEEDED FOR NEW FIXTURE INSTALLATION. INSTALL NEW GYPSUM BOARD AND PATCH SURFACE ONCE BACKING INSTALLATION IS COMPLETE.
2. EXISTING STOREFRONT AND ENTRY TO REMAIN. TENANT CONTRACTOR TO VERIFY ALL DIMENSIONS AND COORDINATE WITH GRAPHIC VENDOR ANYWHERE NEW STOREFRONT GRAPHIC IS INSTALLED.
3. EXISTING DEMISING OR EXTERIOR WALLS TO BE DEMO'D IN PREPERATION FOR NEW RECIEVING DOOR(S). PATCH, REPAIR, AND RESURFACE AS REQUIRED BY DEMOLITION. SEE SHEET A1.0 FOR FLOOR PLAN.
4. TENANT CONTRACTOR TO REMOVE EXISTING METAL AWNING. PREP, PATCH AND REPAIR AS REQUIRED FOR NEW FABRIC AWNING.
5. EXISTING DOOR TO REMAIN. G.C. TO CHECK AND REPLACE HARDWARE AS NEEDED.
6. TRENCH EXISTING CONCRETE AS REQ'D FOR NEW POWER/DATA CONDUIT AND PIPING. ALL UNDERSLAB WORK MUST BE COORDINATED WITH ON-SITE TENANT COORDINATOR. SEE DETAIL 2/A1.0
7. EXISTING STRUCTURAL COLUMN TO REMAIN. NOTIFY ARCHITECT IF THERE IS ANY DISCRPANCY ON COLUMN SIZE OR LOCATION WHICH MIGHT INTERFER WITH NEW STORE DESIGN.
8. EXISTING CANOPY TO REMAIN.
9. EXISTING STOREFRONT TO REMAIN AND PROTECTED DURING CONSTRUCTION.
10. EXISTING ELECTRICAL TO BE REMOVED, G.C. TO VERIFY LOCATION AND PROVIDE ARCHITECT ACTUAL LOCATION PRIOR TO REMOVING.
11. TENANT CONTRACTOR TO REMOVE EXISTING INTERIOR DOOR AND FRAME. PATCH, REPAIR, AND RESURFACE AS REQUIRED BY DEMOLITION. IN-FILL OPENINGS WHERE DOOR HAVE BEEN REMOVED WITH SAME CONSTRUCTION TYPE WALLS TO MAINTAIN FIRE RATING. G.C. TO PROVIDE BLOCKING AS NECESSARY PER NEW WALL FIXTURES. SEE SHEET A3.0 FOR FIXTURE PLAN.

Architect:

brr

ARCHITECT OF RECORD:
BRR ARCHITECTURE, INC
8131 METCALF AVE
SUITE 300
OVERLAND PARK, KS 66204

www.brrarch.com

TEL: 913-262-9095
FAX: 913-262-9044

COPYRIGHT NOTICE

This drawing was prepared for use on a specific site contemporaneously with its issue date and it is not suitable for use on a different project site or at a later time. Use of this drawing for construction on another project requires the services of properly licensed architects and engineers. Reproduction of this drawing for reuse on another project is not authorized and may be contrary to the law.

Engineer:

Project Owner:

NIKE, Inc.
One Bowerman Drive
Beaverton, OR 97005
(503) 671-6453
www.nike.com

Project Address:

NIKE FACTORY STORE
WATERFORD LAKES
SHOPPING CENTER
449 N. ALAFAYA TRAIL
ORLANDO, FL 32828
TEMPLATE ISSUE DATE: 11/28/2018

Fixture Package:
UNITE

Stamp:
NOT FOR CONSTRUCTION

Issued For:
PERMIT/BID

Issue Date:
11/06/2020

Revisions:

NO.	REASON	DATE

PROJECT MANAGER:
KH
CHECKED BY:
DRAWN BY:
RAN

Project Number:
62301411

Sheet Title:
DEMOLITION FLOOR PLAN

Sheet Number:
DM1.0

ELECTRICAL SYMBOLS

THIS IS A MASTER LEGEND AND NOT ALL SYMBOLS OR ABBREVIATIONS ARE USED. V3.00

STANDARD MOUNTING HEIGHTS

AUDIBLE APPLIANCES (CENTERLINE)	84"
ALARMS	48"
ANNUNCIATOR PANELS (DISPLAY)	60"
CONTROLS (TOP OF DEVICE)	48"
EXIT SIGNS (WALL MOUNTED)	80"
FIRE ALARM ANNUNCIATOR PANEL (DISPLAY)	60"
FIRE ALARM BELL (EXTERIOR) (CENTERLINE)	120"
FIRE ALARM CONTROL PANEL/UNIT (DISPLAY)	60"
INTERCOM (AFEA ONLY)	36"
INTERCOMS (TOP OF DEVICE)	48"
PULL STATIONS (TOP OF DEVICE)	48"
PHOTOCELLS	144"
RECEPTACLES	16"
RECEPTACLES (EXTERIOR)	24"
RECEPTACLES (GARAGES)	24"
RECEPTACLES (POOLS)	27"
RECEPTACLES (ABOVE COUNTER)	+6" ABOVE BACKSPLASH/COUNTER, 40" MAX
RECEPTACLES IN EQUIPMENT ROOMS	44"
REMOTE INDICATING LIGHT (EQUIPMENT ROOMS)	48"
REMOTE INDICATING LIGHT (FINISHED AREAS)	CEILING
SAFETY SWITCHES (TOP OF DEVICE)	48"
STARTERS (TOP OF DEVICE)	48"
SWITCHES (TOP OF DEVICE)	44"
TELEPHONE, DATA OUTLETS	SAME AS ADJACENT DEVICE, UNO
TELEPHONE TERMINAL BOARD (BOTTOM)	6"
TELEVISION OUTLETS	REFER TO ARCH DRAWINGS
VISIBLE APPLIANCES (CENTERLINE)	84"

INSTALL OUTLET BOXES AT THE MOUNTING HEIGHTS SHOWN ABOVE UNO IN THE CONSTRUCTION DOCUMENTS. MOUNTING HEIGHTS LISTED ABOVE, OR ELSEWHERE IN THE CONSTRUCTION DOCUMENTS, ARE AFF OR AFG TO BOTTOM OF OUTLET BOX, UNO. ALL DEVICES SHALL BE INSTALLED IN COMPLIANCE WITH CURRENT ADA AND LOCAL REQUIREMENTS.

ABBREVIATIONS

AF	AMPERE FUSE SIZE
AFC	ABOVE FINISHED CEILING
AFF	ABOVE FINISHED FLOOR
AFG	ABOVE FINISHED GRADE
AHJ	AUTHORITY HAVING JURISDICTION
AHU	AIR HANDLING UNIT
AIC	AMPERE INTERRUPTING CAPACITY
AS	AMPERE SWITCH SIZE
AT	AMPERE TRIP SETTING
ATS	AUTOMATIC TRANSFER SWITCH
AV	AUDIO VISUAL
BAS	BUILDING AUTOMATION SYSTEM
BKR	BREAKER
C	CONDUIT
CAT	CATEGORY
CATV	CABLE TELEVISION SYSTEM
CCTV	CLOSED CIRCUIT TELEVISION
CD	CANDELA
CKT	CIRCUIT
CODE	APPLICABLE CODE ADOPTED BY JURISDICTION
CT	CURRENT TRANSFORMER
CTR	CENTER
CVD	CUMULATIVE VOLTAGE DROP
D/DEMO	DEMOLITION
DPDT	DOUBLE-POLE, DOUBLE-THROW
DPST	DOUBLE-POLE, SINGLE-THROW
E/ETR/EX	EXISTING TO REMAIN
EC	ELECTRICAL CONTRACTOR
EF	EXHAUST FAN
EM	EMERGENCY
EMS	ENERGY MANAGEMENT SYSTEM
ELV	ELECTRONIC LOW-VOLTAGE
EWC	ELECTRIC WATER COOLER
FAAP	FIRE ALARM ANNUNCIATOR PANEL
FACP	FIRE ALARM CONTROL PANEL
FCA	FAULT CURRENT AMPS AVAILABLE
FCU	FAN COIL UNIT
FF	FINISHED FLOOR
FLA	FULL LOAD AMPS
FLR	FLOOR
GC	GENERAL CONTRACTOR
GEC	GROUNDING ELECTRODE CONDUCTOR
GES	GROUNDING ELECTRODE SYSTEM
GFR	GROUND FAULT RELAY
G	GROUND
IG	ISOLATED GROUND
ISC	SHORT CIRCUIT CURRENT
JB/J-BOX	JUNCTION BOX
LF	LINEAR FEET
LRA	LOCKED ROTOR AMPS
LTG/LTS	LIGHTING/LIGHTS
MAU	MAKE-UP AIR UNIT
MAX	MAXIMUM
MCA	MINIMUM CIRCUIT AMPACITY
MCB	MAIN CIRCUIT BREAKER
MCC	MOTOR CONTROL CENTER
MFR	MANUFACTURER
MIN	MINIMUM
MLO	MAIN LUGS ONLY
MLV	MAGNETIC LOW-VOLTAGE
MOCP	MAXIMUM OVERCURRENT PROTECTION
MTD	MOUNTED
N/A	NOT APPLICABLE
NF	NON-FUSED
NL	NIGHT LIGHT (24HR ON)
NRTL	NATIONALLY RECOGNIZED TESTING LABORATORY (CSA, ETL, NSF, UL)
NTS	NOT TO SCALE
OS	OCCUPANCY SENSOR
P	POLE
PART	PARTIAL CIRCUIT
PH/Ø	PHASE
PNL	PANEL
PNLBD	PANELBOARD
PROVIDE	FURNISH AND INSTALL
PT	POTENTIAL TRANSFORMER
QTY	QUANTITY
R/REL	RELOCATE
RCPT	RECEPTACLE
RLA	RUNNING LOAD AMPS
RTU	ROOFTOP UNIT
SCCR	SHORT-CIRCUIT CURRENT RATING
SD	SMOKE DUCT DETECTOR
SF	SQUARE FEET
SPDT	SINGLE-POLE, DOUBLE-THROW
SPST	SINGLE-POLE, SINGLE-THROW
SSBJ	SUPPLY-SIDE BONDING JUMPER
ST	SHUNT TRIP
SWBD	SWITCHBOARD
SWGR	SWITCHGEAR
TBB	TELECOMMUNICATIONS BONDING BACKBONE
TBD	TO BE DETERMINED
TGB	TELECOMMUNICATIONS GROUND BUS BAR
TL	TWISTLOCK
TMGB	TELECOMMUNICATIONS MAIN GROUND BUS BAR
TX/XFMR	TRANSFORMER
TYP	TYPICAL
U/F	UNDERFLOOR
U/G	UNDERGROUND
U/S	UNDERSLAB
UH	UNIT HEATER
UNO	UNLESS NOTED OTHERWISE
UPS	UNINTERRUPTIBLE POWER SUPPLY
VD	VOLTAGE DROP
VFD	VARIABLE FREQUENCY DRIVE
VS	VACANCY SENSOR
W	WIRE
W/	WITH
WP	WEATHER PROOF
WR	WEATHER RESISTANT
WT	WATERTIGHT
XP	EXPLOSION PROOF

LINETYPE LEGEND

THROUGHOUT THE DRAWINGS DIFFERENT LINETYPES ARE USED IN COMBINATION WITH THE SYMBOLS TO INDICATE THE STATUS OF ITEMS AS EXISTING, TO BE DEMOLISHED, TO BE INCLUDED AS PART OF NEW WORK AND/OR ITEMS WHICH ARE ANTICIPATED TO BE PROVIDED IN THE FUTURE. THE STATUS OF ITEMS USING THESE LINETYPES ARE RELATIVE TO THE VIEW IN WHICH THEY APPEAR. PHASING SHOWN IN DRAWINGS IS NOT INTENDED TO FULLY DESCRIBE ALL NECESSARY CONSTRUCTION PHASING, WHICH IS DETERMINED BY THE CONTRACTOR AS PART OF THEIR RESPONSIBILITIES. ANY SUCH PHASES DESCRIBED IN THE CONSTRUCTION DOCUMENTS ARE GENERAL AND ONLY INTENDED TO INDICATE A BROAD ORDER FOR THE SAKE OF DESCRIBING THE PROJECT. THE FOLLOWING LINETYPES MAY BE USED ON ANY DEVICE, EQUIPMENT, NOTE, LINE, SHAPE, ETC.

EXISTING — NEW — DEMOLISH — FUTURE

ANNOTATION

- MECHANICAL OR FIRE PROTECTION PLAN NOTE CALLOUT
- PLUMBING PLAN NOTE CALLOUT
- ELECTRICAL OR FIRE ALARM PLAN NOTE CALLOUT
- TECHNOLOGY PLAN CALLOUT
- PLUMBING EQUIPMENT DESIGNATION. (CONTRACTOR FURNISHED AND INSTALLED). REFER TO PLUMBING FIXTURE OR EQUIPMENT SCHEDULES
- EQUIPMENT DESIGNATION (OWNER FURNISHED, CONTRACTOR INSTALLED)
- CU / 1 — MECHANICAL EQUIPMENT DESIGNATION (CONTRACTOR FURNISHED AND INSTALLED UNLESS NOTED OTHERWISE)
- CONNECTION POINT OF NEW WORK TO EXISTING
- 1 / E1 — DETAIL REFERENCE UPPER NUMBER INDICATES DETAIL NUMBER LOWER NUMBER INDICATES SHEET NUMBER
- 1 / E1 — SECTION CUT DESIGNATION

CIRCUITING & WIRING

- 7 5 3 OR P1-3,5,7 [R#] P1 — HOMERUN TO PANELBOARD. INFORMATION AT ARROWS ARE CIRCUIT NUMBERS AND PANELBOARD FOR TERMINATION. REFER TO PANELBOARD SCHEDULES FOR BRANCH CIRCUIT CONDUCTOR SIZES.
- INDICATES RELAY NUMBER
- CIRCUIT CONTINUATION OR PARTIAL CIRCUIT
- CONDUIT CONCEALED
- CONDUIT CONCEALED (EMERGENCY)
- CONDUIT IN/UNDER FLOOR/GROUND CONSTRUCTION
- EXPOSED CONDUIT
- EXPOSED CONDUIT (EMERGENCY)
- FLEXIBLE CONDUIT
- LOW VOLTAGE CABLE (NOT ROUTED IN CONDUIT)
- CONDUIT TURNING DOWN
- CONDUIT TURNING UP
- CONNECTION POINT OR EQUIPMENT TERMINATION
- EQUIPMENT TERMINATION

CONDUCTOR TICK MARK LEGEND

WHERE TICK MARKS ARE SHOWN, THE FOLLOWING SHALL GOVERN:

- SWITCHED HOT (PHASE) CONDUCTORS (SHOWN TRAILING NEUTRAL)
- NEUTRAL (GROUNDED) CONDUCTOR
- UNSWITCHED HOT (PHASE) CONDUCTORS (SHOWN LEADING NEUTRAL)
- NOTE: HASH MARKS INDICATE QUANTITY OF CONDUCTORS
- EQUIPMENT GROUNDING CONDUCTOR IN CONDUIT (GREEN INSULATION OR BARE)
- ISOLATED GROUNDING CONDUCTOR IN CONDUIT (GREEN INSULATION WITH YELLOW TRACER)

BRANCH CIRCUIT CONDUCTOR TABLE

WHERE TICK MARKS ARE NOT SHOWN, THE FOLLOWING SHALL GOVERN:

# OF POLES	HOT (PHASE)*	NEUTRAL (GROUNDED)**	GROUNDING***
1P	(1)	(1) UNO	(1)
2P	(2)	(1) UNO	(1)
3P	(3)	(1) UNO	(1)

* PROVIDE ADDITIONAL CONDUCTORS THROUGH ENTIRE CIRCUIT (SWITCHED, UNSWITCHED/EM, ETC.) AS INDICATED THROUGHOUT CONSTRUCTION DOCUMENTS AND AS REQUIRED FOR A COMPLETE AND WORKING SYSTEM.

** REFER TO SPECIFICATIONS FOR LIMITATIONS ON SHARING NEUTRAL (GROUNDED) CONDUCTORS. DO NOT CIRCUIT AS A MULTI-WIRE BRANCH CIRCUIT, UNO.

*** PROVIDE ADDITIONAL ISOLATED GROUNDING CONDUCTORS WHERE INDICATED.

REFER TO SPECIFICATIONS, PLANS, NOTES, WIRING AND CONTROL DIAGRAMS FOR ADDITIONAL CIRCUITING REQUIREMENTS.

SIGNALING

- B — SIGNALING BELL
- B — SIGNALING BUZZER
- T — LV TRANSFORMER

LIGHTING

- A a — LIGHT FIXTURE
  - a = LOWER CASE LETTER IS SWITCH IDENTIFIER
  - A = UPPER CASE LETTER INDICATES LIGHT FIXTURE TYPE
  - = WALL MOUNT
  - = ARROW INDICATED AIMING DIRECTION
- LIGHT FIXTURE CIRCUITED AS A NIGHT LIGHT (NL)
- EMERGENCY LIGHT FIXTURE WITH EMERGENCY LIGHTING BATTERY PACK OR CONNECTED TO EMERGENCY SOURCE
- NIGHT LIGHT/EMERGENCY LIGHT FIXTURE WITH EMERGENCY BATTERY PACK OR CONNECTED TO EMERGENCY SOURCE
- LIGHT FIXTURE WITH DUAL BALLASTS CIRCUITED SEPARATELY (SHADING IMPLIES EMERGENCY LIGHT FIXTURE)
- [#] — LIGHTING TRACK (# INDICATES RELAY NUMBER)
- MIRROR LIGHTS
- EXTERIOR PARKING LOT LIGHT FIXTURE
- EXTERIOR PEDESTRIAN POST TOP LIGHT FIXTURE
- EXTERIOR LIT BOLLARD LIGHT
- EXIT SIGN - CEILING / WALL MOUNTED, ARROWS AS INDICATED, FACE HATCHED
- EMERGENCY LIGHTING UNIT EQUIPMENT WITH BATTERY PACK - CEILING/WALL MOUNTED
- AFEA (AREA FOR EVACUATION ASSISTANCE) SIGN - CEILING/WALL MOUNTED, ARROWS AS INDICATED

REFER TO LIGHT FIXTURE SCHEDULE FOR MORE INFORMATION

POWER EQUIPMENT & DEVICES

- ELECTRICAL PANELBOARD (SURFACE OR FLUSH MOUNT)
- ELECTRICAL CABINET (SURFACE OR FLUSH MOUNT), TYPE AS NOTED
- PLYWOOD TERMINAL BOARD FOR TELEPHONE SYSTEM, UNO. SIZE AS NOTED
- SWITCHBOARD OR MOTOR CONTROL CENTER ON HOUSEKEEPING PAD
- ELECTRICAL DISTRIBUTION PANELBOARD
- TRANSFORMER
- 200/3/150/3R — DISCONNECT SWITCH - "200/3/150/3R" DENOTES AMPERES/POLE/FUSE/NEMA ENCLOSURE RATING, NF= NON-FUSED, CB= CIRCUIT BREAKER (200/3/CB), NO VALUE (200/3/150) FOR NEMA ENCLOSURE MEANS STANDARD NEMA 1 RATING
- 30/3/15/1/3R — COMBINATION DISCONNECT (SAFETY) SWITCH AND MOTOR STARTER "30/3/15/1/3R" DENOTES AMPERES/POLE/FUSE/NEMA STARTER SIZE/NEMA ENCLOSURE RATING. NF= NON-FUSED, CB= CIRCUIT BREAKER (30/3/CB/1), NO VALUE (200/3/150/1) FOR NEMA ENCLOSURE MEANS STANDARD NEMA 1 ENCLOSURE RATING
- 2 — MAGNETIC MOTOR STARTER, NEMA SIZE AS NOTED. 3-POLE, UNO
- VFD — VARIABLE FREQUENCY DRIVE
- INDICATING LIGHT
- EMERGENCY POWER OFF BUTTON
- STOP-START PUSH BUTTON CONTROL STATION
- HAND-OFF-AUTO PUSH BUTTON CONTROL STATION
- MUSHROOM-TYPE PUSH BUTTON
- OVERHEAD PADDLE FAN

NURSE CALL (HOSPITAL)

- B — CODE BLUE PUSHBUTTON STATION
- BR — BED RECEPTACLE
- DS — DUTY STATION
- E — STAFF EMERGENCY ASSIST STATION
- EP — PATIENT EMERGENCY PULL CORD STATION
- IC — INTERCOM
- K — NURSE CALL KEY SWITCH
- N1 — NURSE CALL BEDSIDE STATION - SINGLE PATIENT
- N2 — NURSE CALL BEDSIDE STATION - DOUBLE PATIENT
- NA — NURSE CALL VISUAL ANNUNCIATOR PANEL
- SS — STAFF STATION (NORMAL, EMERGENCY & CODE BLUE)
- NM — NURSE CALL MASTER STATION
- B — DOME LIGHT - CEILING MOUNTED, B = BUZZER
- B — DOME LIGHT - WALL MOUNTED, B = BUZZER
- Z,B — ZONE DOME LIGHT, B = BUZZER

BOXES, LIGHTING CONTROL & WIRING DEVICES

- $# — SWITCH LETTER DESIGNATIONS AS FOLLOWS:
  - BLANK = SINGLE
  - 2 = TWO POLE
  - 3 = THREE-WAY
  - 4 = FOUR-WAY
  - D = DIMMER
  - F = FAN SPEED CONTROL
  - FH = FRACTIONAL HORSEPOWER MANUAL CONTROLLER
  - IH = INTEGRAL HORSEPOWER MANUAL CONTROLLER
  - K = KEYED
  - LV# = LOW VOLTAGE / DIGITAL
  - M = MANUAL MOTOR STARTER DISCONNECT
  - OS# = OCCUPANCY SENSOR
  - P = SPST PILOT LIGHT
  - WP = WEATHER PROOF
  - # = REFER TO LIGHTING CONTROL DEVICE SCHEDULE
- ALC — AUTOMATIC LOAD CONTROL RELAY
- BTS — BRANCH CIRCUIT TRANSFER SWITCH
- CEILING / WALL MOUNTED OCCUPANCY SENSOR (# INDICATES TYPE PER SCHEDULE)
  - CORNER 90 DEGREE SENSING
  - ONE-DIRECTION SENSING, CEILING/WALL MOUNT
  - CEILING MOUNT, TWO DIRECTION SENSING
  - CEILING MOUNT, FOUR DIRECTION SENSING
- C# — CONTACTOR (SIZE, COIL VOLTAGE AND NUMBER OF POLES AS INDICATED)
- CL## — TRACK-MOUNTED CURRENT LIMITER (## INDICATES AMPERAGE)
- D# — DAYLIGHT SENSOR (# INDICATES TYPE PER SCHEDULE)
- LC — LIGHTING CONTROLS PROCESSOR AND/OR EQUIPMENT
- P# — POWER PACK (# INDICATES TYPE PER SCHEDULE)
- PS# — PHOTOELECTRIC SWITCH
- R## — ROOM CONTROLLER (# INDICATES TYPE PER SCHEDULE)
- TS# — TIME SWITCH
- SIMPLEX RECEPTACLE - NEMA 5-20R, UNO
- DUPLEX RECEPTACLE - NEMA 5-20R, UNO
- DOUBLE DUPLEX RECEPTACLE - NEMA 5-20R, UNO
- SPECIAL RECEPTACLE - NEMA TYPE AS NOTED
- TWIST-LOCK TYPE RECEPTACLE
- G — BLANK FACE GFCI FEED THROUGH DEVICE
- OR GFCI — GFCI TYPE RECEPTACLE*
- OR IG — ISOLATED GROUND TYPE RECEPTACLE*
- OR EM — EMERGENCY RECEPTACLE*
- RECEPTACLE INSTALLED ABOVE COUNTER OR BACKSPLASH*
- RECEPTACLE INSTALLED IN CEILING*
- RECEPTACLE INSTALLED IN FLOOR*
- RECEPTACLE INSTALLED VIA DROP CORD*
- # — RECEPTACLE LETTER DESIGNATIONS AS FOLLOWS:
  - C = AUTOMATICALLY CONTROLLED
  - CH = CLOCK HANGER TYPE
  - G=RCPT PROTECTED BY GFCI CIRCUIT BREAKER OR UPSTREAM GFCI DEVICE
  - H = HORIZONTALLY MOUNTED
  - S = MANUALLY CONTROLLED
  - SP / TVSS = SURGE PROTECTION
  - TR = TAMPER RESISTANT
  - TV = TELEVISION
  - USB = USB/DUPLEX
  - WP = WEATHER PROOF COVER
  - WR = WEATHER RESISTANT
- MULTI-OUTLET ASSEMBLY
- TELEPHONE OUTLET
- DATA OUTLET
- MULTI-SERVICE OUTLET; TELEPHONE AND DATA
  - ABOVE COUNTER, TYP
  - WALL, TYP
  - FLOOR, TYP
- A — MULTI-SERVICE POWER POLE WITH TELEPHONE, DATA AND POWER OUTLETS A = TYPE, REFER TO PLANS, SCHEDULES AND SPECIFICATIONS
- A — MULTI-SERVICE FLOOR BOX WITH TELEPHONE, DATA AND POWER OUTLETS A = TYPE, REFER TO PLANS, SCHEDULES AND SPECIFICATIONS
- A — POKE THROUGH, A = TYPE, REFER TO PLANS, SCHEDULES AND SPECIFICATIONS
- T — THERMOSTAT
- J J — CEILING/FLOOR MOUNT JUNCTION/OUTLET BOX
- J J — WALL MOUNT JUNCTION/OUTLET BOX

* SYMBOL DEMONSTRATED WITH DUPLEX RECEPTACLE, WHEN USED IN COMBINATION WITH OTHER DEVICES MEANING IS SIMILAR FOR THOSE DEVICE TYPES.

REFER TO LIGHTING CONTROL DEVICE SCHEDULE FOR MORE INFORMATION.

ELECTRICAL ONE-LINE & RISER DIAGRAM

- ###A 3P — SWITCH (RATING AS INDICATED)
- ###A 3P — DRAWOUT CIRCUIT BREAKER (RATINGS AS INDICATED)
- ###AS 3P ###AF FRS — FUSED SWITCH (RATING, POLES AND FUSE TYPE AS INDICATED)
- ###AS 3P ###AF FRS NEMA # — COMBINATION FUSED SWITCH/STARTER AND STARTER SIZE
- ###AS 3P FRS NEMA # — CIRCUIT BREAKER (RATINGS AS INDICATED)
- ###A 3P NEMA # — COMBINATION CIRCUIT BREAKER/STARTER AND STARTER SIZE
- PANELBOARD, SINGLE OR MULTI-SECTION (REFER TO SCHEDULES)
- ISOLATED POWER PANELBOARD W/ INTEGRAL TRANSFORMER (REFER TO SCHEDULES)
- TX## — TRANSFORMER (TYPE AND RATINGS AS INDICATED)
- TX## — SHIELDED TRANSFORMER (TYPE AND RATINGS AS INDICATED)
- ATS# ###A ATS# (W/BYPASS) — AUTOMATIC TRANSFER SWITCH (RATINGS AS INDICATED)
- ATS# (W/BYPASS) ###A — AUTOMATIC TRANSFER SWITCH WITH BYPASS (RATINGS AS INDICATED)
- ##KW GENERATOR 480Y/277V, 3Ø, 4W ###A, 3P M/G — GENERATOR (RATINGS AS INDICATED)
  - NON-SEPARATELY DERIVED SOURCE OR SEPARATELY DERIVED SOURCE
- MDP SWITCHBOARD ELEC ROOM ### AMPS 480Y/277V 3Ø 4W — SWITCHGEAR, SWITCHBOARD AND/OR DISTRIBUTION PANELBOARD (TYPE, RATING, DEVICES AND ACCESSORIES AS INDICATED)
- DIGITAL VM AM — COMBINATION DIGITAL VOLT METER/AMMETER
- ### — CIRCUIT IDENTIFICATION (REFER TO CIRCUIT SCHEDULE)
- GFR — GROUND FAULT RELAY
- PFR — PHASE FAILURE RELAY
- KK# — KIRK-KEY INTERLOCK (# INDICATES KEY PAIR)
- ST — SHUNT TRIP
- AM — AMMETER (RANGE AS SPECIFIED OR REQUIRED)
- VM — VOLTMETER (RANGE AS SPECIFIED OR REQUIRED)
- UTILITY METER M — UTILITY METER (AS REQUIRED BY UTILITY)
- AS — AMMETER SWITCH
- VS — VOLTMETER SWITCH
- WH D 15 — WATT-HOUR METER, "D" DENOTES DEMAND REGISTER, "15" DENOTES MINUTES OF DEMAND INTERVAL
- CURRENT TRANSFORMER RATING AS SPECIFIED OR REQUIRED
- POTENTIAL TRANSFORMER RATING AS SPECIFIED OR REQUIRED
- SPD — SURGE-PROTECTIVE DEVICE
- GROUND CONNECTION
- GROUND CONNECTION WITH TEST WELL
- GROUND ROD
- LIGHTNING ARRESTER
- CAPACITOR
- CONTACT (OPEN OR CLOSED)
- HEATER
- HP — MOTOR
- ## — BLOCK LOAD KW OR KVA
- ×F# ×FP# — FAULT POINT REFERENCED IN SHORT CIRCUIT CURRENT AND VOLTAGE DROP SPREADSHEET

ELECTRICAL DEMOLITION GENERAL NOTES:

1. COORDINATE DEMOLITION AND NEW WORK WITH ALL DISCIPLINES AND EXISTING CONDITIONS PRIOR TO CONSTRUCTION.
2. PERFORM ALL WORK IN ACCORDANCE WITH THE NEC, O.S.H.A., PERTINENT NFPA CODES, THE RULES AND REGULATIONS OF ALL LOCAL, STATE AND FEDERAL AUTHORITIES HAVING JURISDICTIONS, AND ALL STANDARDS APPLIED BY THE BUILDING MANAGEMENT. PROVIDE OWNER WITH CERTIFICATES OF INSPECTION.
3. REFER TO ARCHITECTURAL DRAWINGS FOR AREAS OF DEMOLITION. EXISTING LIGHTING FIXTURES, EXIT SIGNS, AND OTHER CEILING MOUNTED DEVICES TO BE REMOVED IN THESE AREAS SHALL BE DISCONNECTED FROM ITS EXISTING SOURCE TO ALLOW FOR REMOVAL. UNLESS OTHERWISE NOTED ON ARCHITECTURAL DRAWINGS. WIRING AND CONDUIT SHALL BE REMOVED BACK TO SOURCE/PANEL. NO CONDUIT SHALL BE ABANDONED IN PLACE.
4. MISCELLANEOUS POWER DEVICES, TELE/COMMUNICATION DEVICES, EXIT LIGHTS, LIGHTING FIXTURES, ETC. MOUNTED ON PARTITIONS TO BE REMOVED OR CONCEALED BY NEW CONSTRUCTION SHALL BE DISCONNECTED FROM THEIR SERVICE SOURCE TO ALLOW FOR REMOVAL. WIRING AND CONDUIT SHALL BE REMOVED BACK TO SOURCE/PANEL. NO CONDUIT SHALL BE ABANDONED IN PLACE.
5. MAINTAIN CONTINUITY OF ALL ACTIVE LIGHTING & POWER CIRCUITS. INTERRUPT WIRING AND REROUTE WHERE REQUIRED TO POWER EXISTING DEVICES TO REMAIN. PROVIDE AS-BUILT DRAWINGS INDICATING ALL RELOCATIONS AND CIRCUIT ADJUSTMENTS IN PANELBOARDS. UPDATE PANELBOARD CIRCUIT DIRECTORIES FOR ALL PANELBOARDS AFFECTED BY THE WORK.
6. OWNER RETAINS RIGHTS OF SALVAGE FOR ELECTRICAL EQUIPMENT AND LIGHT FIXTURES TO BE REMOVED. COORDINATE WITH OWNER THE EQUIPMENT AND FIXTURES TO BE SALVAGED AND THE LOCATION FOR STORAGE. AVOID DAMAGE TO SALVAGED EQUIPMENT, FIXTURES AND DEVICES DURING DEMOLITION WORK AND DURING TRANSPORT TO OWNER'S DESIGNATED STORAGE LOCATION.
7. ALL PREVIOUSLY ABANDONED OR OBSOLETE WIRING SHALL BE REMOVED IN ITS ENTIRETY.
8. REVIEW EXISTING CONDITIONS PRIOR TO DEMOLITION AND COORDINATE ANY POWER INTERRUPTIONS WITH OWNER'S REPRESENTATIVE.
9. SEAL ALL PENETRATIONS THROUGH FLOORS, WALLS, CEILINGS, AND ROOF WHERE ELECTRICAL COMPONENTS ARE REMOVED AND WHERE THE EXISTING PENETRATION IS NOT USED FOR THE NEW INSTALLATION. REPAIR DAMAGED SURFACES TO MATCH ADJACENT AREAS.
10. REMOVE ALL EXISTING ELECTRICAL EQUIPMENT, FIXTURES, SYSTEMS, CONDUIT AND WIRING NO LONGER REQUIRED AFTER RENOVATION.

ELECTRICAL GENERAL NOTES:

1. READ THE SPECIFICATIONS AND REVIEW DRAWINGS OF ALL DIVISIONS OF WORK. COORDINATE THIS WORK WITH ALL OTHER DIVISIONS OF WORK AND ALL SUBCONTRACTORS. PROVIDE ALL SUBCONTRACTORS WITH A COMPLETE SET OF BID DOCUMENTS.
2. ELECTRICAL DRAWINGS ARE DIAGRAMMATIC AND REPRESENT THE GENERAL SCOPE OF THE WORK. SIZES AND LOCATION OF EQUIPMENT AND WIRING ARE SHOWN TO SCALE WHERE POSSIBLE, BUT MAY BE DISTORTED FOR CLARITY ON THE DRAWINGS. FINAL LOCATION OF OUTLETS AND EQUIPMENT SHALL BE AS APPROVED BY THE ARCHITECT OR THEIR REPRESENTATIVE. IT IS NOT WITHIN THE SCOPE OF DRAWINGS TO SHOW ALL NECESSARY BENDS, OFFSETS, PULL BOXES AND OBSTRUCTIONS. IT SHALL BE THE RESPONSIBILITY OF THE CONTRACTOR TO INSTALL ALL WORK TO CONFORM TO THE STRUCTURE, PRESERVE HEADROOM AND KEEP OPENINGS AND PASSAGEWAYS CLEAN.
3. EXISTING CONDITIONS WERE TAKEN FROM ORIGINAL DRAWINGS AND SITE VISITS AND MAY NOT REFLECT EXACT 'AS-BUILT' CONDITIONS. FIELD VERIFY ALL EXISTING CONDITIONS PRIOR TO SUBMITTING FINAL BIDS. CAREFULLY COORDINATE NEW WORK AND DEMOLITION WITH ALL OTHER DISCIPLINES AND EXISTING CONDITIONS.
4. SECURE AND PAY FOR ALL PERMITS AND FEES NECESSARY FOR EXECUTION AND COMPLETION OF ELECTRICAL WORK. FURNISH TO THE ARCHITECT A COPY OF INSPECTION REPORTS AND APPROVAL CERTIFICATES FROM LOCAL AND STATE INSPECTIONS.
5. ELECTRICAL CONTRACTOR SHALL REQUEST A SET OF ARCHITECTURAL PLANS FOR REFERENCE AND COORDINATE FROM THE GENERAL CONTRACTOR.
6. OBTAIN A COPY OF AND REVIEW THE LANDLORD'S LATEST EDITION OF TENANT DESIGN AND CONSTRUCTION CRITERIA AND COMPLY WITH ALL REQUIREMENTS. WHERE CONFLICTS BETWEEN CRITERIA AND CONSTRUCTION DOCUMENTS ARISE, NOTIFY ARCHITECT/ENGINEER IMMEDIATELY.
7. ALL ELECTRICAL WORK SHALL BE PERFORMED IN COMPLIANCE WITH CURRENT NATIONAL ELECTRICAL CODE, OTHER LOCAL CODES AND LANDLORD CRITERIA.
8. UPON COMPLETION OF ALL ELECTRICAL WORK, ELECTRICAL CONTRACTOR SHALL ADJUST AND TEST ALL CIRCUITS, OUTLETS, SWITCHES, LIGHTS, MOTORS, AND ANY OTHER ELECTRICAL ITEMS. DAMAGED ITEMS SHALL BE IMMEDIATELY REPAIRED OR REPLACED WITH ALL NEW EQUIPMENT AND THAT PART OF THE SYSTEM SHALL THEN BE RETESTED. ALL SUCH REPLACEMENT OR REPAIR SHALL BE DONE AT NO ADDITIONAL COST TO THE OWNER.
9. AFTER COMPLETION OF WORK UNDER THIS SECTION, CLEAN-UP ALL RESULTANT DEBRIS FROM THIS WORK AND REMOVE FROM THE SITE.
10. VERIFY LOCATIONS FOR ALL ELECTRICAL EQUIPMENT WITH ARCHITECTURAL DRAWINGS FOR INTERIOR DETAILS AND FINISH. IN CENTERING OUTLETS AND LOCATING BOXES AND OUTLETS, ALLOW FOR OVERHEAD PIPES, DUCTS AND MECHANICAL EQUIPMENT, VARIATIONS IN FIREPROOFING AND PLASTERING, WINDOW AND DOOR TRIM, PANELING, CEILING AND ASSOCIATED CONDITIONS, AND CORRECT ANY INACCURACY RESULTING FROM FAILURE TO DO SO WITHOUT EXPENSE TO OWNER.
11. CONTRACTOR SHALL BE RESPONSIBLE TO COORDINATE WITH ALL TRADES AND ELECTRICAL REFERENCES ON ARCHITECTURAL DRAWINGS.
12. COORDINATE ALL ELECTRICAL WORK OUTSIDE OF TENANT SPACE WITH LANDLORD TO ENSURE MINIMAL DISRUPTION. ALARM AND EMERGENCY SYSTEMS SHALL NOT BE INTERRUPTED UNLESS APPROVED BY THE OWNER.
13. COORDINATE EXACT ROUTE FOR INSTALLATION OF ELECTRICAL AND TELEPHONE SERVICES IN THE FIELD WITH LANDLORD OR BUILDING ENGINEER. REFER TO ONE-LINE DIAGRAM FOR ADDITIONAL TELECOMMUNICATION SYSTEM REQUIREMENTS.
14. FIELD VERIFY EXACT LOCATION OF LANDLORD SHELL BUILDING DUCTWORK AND PIPING. NOTIFY ARCHITECT/ENGINEER IMMEDIATELY IF NEC REQUIRED CLEARANCES FOR TENANT PANELBOARDS ARE NOT MET DUE TO SHELL BUILDING SERVICES ROUTED ABOVE TENANT SPACE.
15. THE CONTRACTOR SHALL PERFORM ALL CUTTING AND PATCHING OF THE EXISTING CONSTRUCTION WHICH MAY BE REQUIRED FOR THE PROPER INSTALLATION OF THE ELECTRICAL WORK. ALL PATCHING SHALL BE OF THE SAME MATERIALS, WORKMANSHIP AND FINISH, AND SHALL ACCURATELY MATCH ALL SURROUNDING WORK.
16. FOR ALL SLAB PENETRATIONS: THE METHOD, DEPTHS, AND LOCATIONS SHALL BE PRE-APPROVED BY BUILDING FIELD REPRESENTATIVE PRIOR TO THE START OF WORK. SLAB REPLACEMENT SHALL BE INSTALLED WITH DOWELING AND REINFORCED CONCRETE OR AS DIRECTED BY FIELD REPRESENTATIVE. WHERE SLAB IS SAW-CUT AND REMOVED FOR TRENCHING THE CONTRACTOR SHALL INSTALL MOISTURE BARRIER PER LANDLORD'S REQUIREMENTS.
17. COORDINATE ALL TRENCHING TO ENSURE THAT ANY UNDER SLAB UTILITIES ETC. ARE NOT DAMAGED DURING FLOOR CUT. ANY DAMAGE INCURRED SHALL BE REPAIRED AT CONTRACTOR'S EXPENSE. PRIOR APPROVAL AND COORDINATION WITH PROPERTY MANAGEMENT IS REQUIRED FOR ALL CONCRETE CUTTING.
18. ALL PENETRATIONS THROUGH FIRE RATED WALLS, FLOORS OR PARTITIONS SHALL BE PROPERLY SEALED TO PREVENT THE SPREAD OF SMOKE AND FIRE. THE RATING OF THE PENETRATION SEAL SHALL AT A MINIMUM BE THE SAME RATING AS THAT OF THE WALL, FLOOR OR PARTITION ASSEMBLY. REFER TO SPECIFICATIONS FOR ADDITIONAL INFORMATION.
19. PROVIDE A SEPARATE GREEN EQUIPMENT GROUND CONDUCTOR SIZED PER CODE IN ALL CONDUITS AND RACEWAYS CONTAINING LINE VOLTAGE CIRCUITS. FOR ALL 20 AMP CIRCUITS, EQUIPMENT GROUND CONDUCTOR SIZE SHALL MATCH PHASE CONDUCTOR SIZE. INCREASE EQUIPMENT GROUNDING CONDUCTOR SIZE PER CODE FOR CIRCUITS UPSIZED FOR VOLTAGE DROP.
20. ALL WIRING SHALL BE IN METALLIC RACEWAY (EMT OR RIGID). FLEXIBLE METAL CONDUIT MAY ONLY BE USED FOR FINAL CONNECTIONS FROM OUTLET BOXES TO LIGHT FIXTURES, MOTORS, APPLIANCES, ETC., MAXIMUM LENGTH (6) FEET. NO 'BX', 'ROMEX' ARMORED CABLE, ETC., ALLOWED.
21. EXPOSED CONDUIT SHALL BE INSTALLED IN STRAIGHT LINES, PARALLEL WITH OR AT RIGHT ANGLES TO THE BUILDING STRUCTURE. DO NOT LOOP EXCESS FLEXIBLE CONDUIT IN CEILING SPACE.
22. FLEXIBLE CONDUIT IS NOT PERMITTED WITHIN DEMISING WALLS AND IS ONLY ALLOWED FOR FINAL CONNECTIONS OF 6'-0" OR LESS.
23. HORIZONTAL OR CROSS RUNS OF CONDUIT AND WIRING IN WALLS AND PARTITIONS IS NOT PERMITTED.
24. SECURE ALL SUPPORTS TO BUILDING STRUCTURE AS REQUIRED. SUPPORT HORIZONTAL RUNS OF METALLIC RACEWAYS NOT MORE THAN TEN FEET APART.
25. COORDINATE FINAL CONNECTION LOCATIONS, TYPES, AND REQUIREMENTS FOR DIVISION 23 EQUIPMENT WITH DIVISION 23 CONTRACTOR PRIOR TO ROUGH-IN.
26. PROVIDE NYLON BUSHINGS FOR ALL CONDUITS TERMINATED WITHOUT A JUNCTION BOX UNLESS NOTED OTHERWISE. PROVIDE PULLSTRING IN ALL EMPTY CONDUIT.
27. ALL JUNCTION BOXES SHALL BE RIGIDLY ATTACHED TO STRUCTURE OR MILLWORK AND SHALL BE FULLY ACCESSIBLE.
28. ELECTRICAL CONTRACTOR SHALL MAKE ALL FINAL CONNECTIONS TO MILLWORK. CONFIRM FINAL CONNECTION LOCATION AND REQUIREMENTS WITH MILLWORK CONTRACTOR PRIOR TO ROUGH-IN.
29. PROVIDE ALL MISCELLANEOUS STEEL AS REQUIRED FOR THE PROPER INSTALLATION OF ELECTRICAL EQUIPMENT AND SYSTEMS.
30. PROVIDE TYPE-WRITTEN CIRCUIT DIRECTORIES AT ALL EXISTING PANELBOARDS AFFECTED BY WORK AND FOR ALL NEWLY INSTALLED PANELBOARDS. SCHEDULES SHALL ACCURATELY REFLECT AS-BUILT CONDITIONS. TRACE ALL EXISTING CIRCUITS TO VERIFY AND UPDATE SCHEDULES.
31. COORDINATE FINAL LOCATION, MOUNTING HEIGHT, AND COLOR OF ALL LIGHT FIXTURES, WALL MOUNTED AND CEILING MOUNTED DEVICES WITH ARCHITECT PRIOR TO ROUGH-IN. REFER TO ARCHITECTURAL REFLECTED CEILING PLAN FOR CEILING MOUNTED DEVICES AND LOCATIONS. ALL CEILING MOUNTED DEVICES SHALL BE EVENLY SPACED FROM ADJACENT LIGHT FIXTURES WHEN POSSIBLE.
32. LIGHT FIXTURES AND ASSOCIATED EQUIPMENT SHOWN ON ELECTRICAL DRAWINGS REPRESENT GENERAL ARRANGEMENTS ONLY. REFER TO ARCHITECTURAL DRAWINGS FOR MORE EXACT LOCATIONS. COORDINATE LOCATIONS WITH ALL OTHER TRADES PRIOR TO INSTALLATION TO AVOID CONFLICTS.
33. LIGHT FIXTURE SCHEDULE IS TO REFERENCE ELECTRICAL CHARACTERISTICS ONLY. COORDINATE FINAL LIGHT FIXTURE LOCATIONS WITH ARCHITECT PRIOR TO ROUGH-IN.
34. PROVIDE UN-SWITCHED HOT LEGS TO ALL EXIT SIGNS, EMERGENCY FIXTURES (EM), NIGHT LIGHTS (NL) AND FIXTURES EQUIPPED WITH BATTERY BACKUP BALLAST. REFER TO LIGHT FIXTURE SCHEDULE FOR ADDITIONAL INFORMATION.
35. PROVIDE NEUTRAL CONDUCTOR TO ALL LINE VOLTAGE LIGHT SWITCH LOCATIONS. IF NEUTRAL TERMINATION IS NOT REQUIRED, CAP CONDUCTOR AND TAG NEUTRAL FOR FUTURE USE.
36. PROVIDE A DEDICATED NEUTRAL FOR ALL DIMMED LIGHTING CIRCUITS.
37. PROVIDE ALL REQUIRED MOUNTING AND SUPPORT HARDWARE FOR LIGHT FIXTURES TO MEET SPECIFIED MOUNTING HEIGHTS.
38. PROVIDE REQUIRED CONDUIT SYSTEM, OUTLET BOXES AND COVER PLATES FOR TELEPHONE AND DATA CABLES. CABLING AND TERMINATIONS FURNISHED AND INSTALLED BY OTHERS.
39. ALL TELECOM CONDUITS SHALL BE A MINIMUM OF 1".
40. FIELD VERIFY EXACT ROUTE FOR INSTALLATION OF ELECTRICAL AND TELEPHONE SERVICES PRIOR TO BID. PROVIDE EMPTY 2" CONDUIT FROM BUILDING TELEPHONE RISER CLOSET TO IT/AV RACK.
41. PROVIDE REQUIRED CONDUIT SYSTEM, OUTLET BOXES AND COVER PLATES FOR TELEPHONE AND DATA CABLES. CABLING AND TERMINATIONS FURNISHED AND INSTALLED BY OTHERS.
42. CONTRACTOR SHALL PROVIDE AND INSTALL ON ALL SWITCHBOARDS AND PANELBOARDS A CUSTOM DIGITALLY PRINTED AND HIGH-DURABILITY LAMINATED LABEL RATED FOR OUTDOOR APPLICATIONS. LETTERING SHALL BE A MINIMUM OF 1/4" HIGH YELLOW BACKGROUND WITH BLACK LETTERING, AND SHALL INCLUDE THE FOLLOWING:

    LINE 1: FEEDER POWER SUPPLY FOR
    LINE 2: PANEL "___" ORIGINATES
    LINE 3: AT PANEL "___"

COMMISSIONING / FUNCTIONAL TESTING:

CONTRACTOR'S BID SHALL INCLUDE PROVISIONS TO PROVIDE ALL SERVICES RELATED TO THE CODE REQUIRED BUILDING SYSTEMS CONMMISSIONING INCLUDING A COMMISSIONING PLAN, FUNCTIONAL TESTING, AND RELATED DOCUMENTATION, REPORTS, AND OWNER TRAINING. THIS INCLUDES RETAINING THE SERVICES OF A 3RD PARTY REGISTERED DESIGN PROFESSIONAL OR APPROVED AGENCY. REFER TO THE LATEST ADOPTED EDITION OF THE APPLICABLE ENERGY CODE FOR MORE INFORMATION. CONTRACTOR SHALL COMPLETE ALL RELATED COMMISSIONING REQUIREMENTS PRIOR TO FINAL INSPECTIONS IN ACCORDANCE WITH THE CONSTRUCTION DOCUMENTS, CODE, AND MANUFACTURER'S INSTRUCTIONS.

NOTE: GENERAL NOTES SHOWN HERE SHALL GOVERN FOR ALL ELECTRICAL SHEETS.

ELECTRICAL DEVICE AND COVERPLATE COLOR SHALL MATCH COLOR OF SURROUNDING WALL OR CEILING.

Architect:

brr

ARCHITECT OF RECORD:
BRR ARCHITECTURE, INC
8131 METCALF AVE
SUITE 300
OVERLAND PARK, KS 66204
www.brrarch.com
TEL: 913-262-9095
FAX: 913-262-9044

COPYRIGHT NOTICE

This drawing was prepared for use on a specific site contemporaneously with its issue date and it is not suitable for use on a different project site or at a later time. Use of this drawing for reference or example on another project requires the services of properly licensed architects and engineers. Reproduction of this drawing for reuse on another project is not authorized and may be contrary to the law.

Engineer:

HENDERSON ENGINEERS
8345 LENEXA DRIVE, SUITE 300
LENEXA, KS 66214
TEL 913.742.5000 FAX 913.742.5001
WWW.HENDERSONENGINEERS.COM
2050003713
FL. CORPORATE NO: EB 7606
EXPIRES 2/28/2021

Project Owner:

NIKE, Inc.
One Bowerman Drive
Beaverton, OR 97005
(503) 671-6453
www.nike.com

Project Address:

NIKE FACTORY STORE
WATERFORD LAKES SHOPPING CENTER
449 N. ALAFAYA TRAIL
ORLANDO, FL 32828
TEMPLATE ISSUE DATE: 11/28/2018

Fixture Package: UNITE

Stamp:

THIS DOCUMENT IS RELEASED FOR THE PURPOSE OF PRELIMINARY SUBMITTAL
DEAN W. CHANDLER
LICENSE # 83831

IT IS NOT TO BE USED FOR CONSTRUCTION PURPOSES

DEAN W. CHANDLER
LICENSE # 83831

Issued For: PERMIT/BID

Issue Date: 11/06/2020

Revisions:

NO.	REASON	DATE

PROJECT MANAGER: KH
CHECKED BY:
DRAWN BY: Author

Project Number: 62301411

Sheet Title: ELECTRICAL LEGENDS AND GENERAL NOTES

Sheet Number: E0.0

DEAN W. CHANDLER

ELECTRICAL LIGHTING GENERAL NOTES:

1. REFER TO SHEET E0.0 FOR ELECTRICAL GENERAL NOTES.
2. REFER TO SHEET E3.2 FOR LIGHT FIXTURE SCHEDULE.
3. [#] ADJACENT TO LIGHT FIXTURE INDICATES WHICH CIRCUIT FIXTURE SHALL BE CONNECTED TO ON DUAL-CIRCUIT LIGHT FIXTURES.
4. REFER TO PANELBOARD SCHEDULES ON SHEET E3.1 AND LIGHTING ZONE CONTROL SCHEDULE ON SHEET E3.2 FOR CIRCUIT ASSIGNMENTS RELATED TO LIGHTING CONTROL.

ELECTRICAL LIGHTING PLAN NOTES

1 GENERAL AND EMERGENCY EGRESS LIGHTING OUTSIDE OF TENANT SPACE IS RESPONSIBILITY OF LANDLORD.

2 CEILING MOUNTED OCCUPANCY SENSOR AND POWER PACK WITH LOW VOLTAGE MANUAL OVERRIDE SWITCH(ES). REFER TO LIGHTING CONTROL DEVICE SCHEDULE AND DETAIL 2 ON SHEET E3.2 FOR ADDITIONAL INFORMATION.

3 WALL MOUNTED OCCUPANCY SENSOR. REFER TO LIGHTING CONTROL DEVICE SCHEDULE ON SHEET E3.2 FOR ADDITIONAL INFORMATION.

4 MASTER LIGHTING OVERRIDE SWITCH. REFER TO DETAIL 1 ON SHEET E3.2 FOR ADDITIONAL INFORMATION AND ARRANGEMENT OF MASTER SWITCH, LOCAL LIGHTING CONTROL SWITCHES, SECURITY/AUDIO DEVICES, AND HVAC DEVICES. REFER TO DETAIL 2 ON SHEET E3.2 FOR LIGHTING CONTROL DIAGRAM.

5 LOW VOLTAGE SWITCH FOR MANUAL CONTROL OF LIGHT FIXTURES. WHEN TWO LOW VOLTAGE SWITCHES ARE ADJACENT, LOCATE UNDER A SINGLE COVERPLATE. LIGHT SWITCHES SHALL BE LOCATED DIRECTLY NEXT TO DOOR FRAME AND SHALL HAVE PRIORITY OVER OTHER DEVICES LOCATED NEARBY (SUCH AS VOLUME CONTROLS, HVAC SENSORS, ETC). REFER TO LIGHTING CONTROL DEVICE SCHEDULE ON SHEET E3.2 FOR ADDITIONAL INFORMATION.

6 COORDINATE LIGHT FIXTURE AND EXIT SIGN LAYOUT IN STOCKROOM WITH SHELVING PRIOR TO INSTALLATION.

7 EMERGENCY LIGHTING. PROVIDE UNSWITCHED HOT CONDUCTOR TO EACH INTEGRAL EMERGENCY DRIVER.

8 CUSTOM COMBINATION LED PENDANT AND TRACK FIXTURE. COMBINATION FIXTURE IS WIRED SIMILAR TO TWO-CIRCUIT TRACK. PROVIDE (1) CIRCUIT WITH 0-10V DIMMING TO GENERAL LIGHT FIXTURE RUNS, AND PROVIDE (1) NON-DIMMING CIRCUIT TO DISPLAY TRACK SECTIONS.

9 LOCAL LOW VOLTAGE DIMMING SWITCH FOR CONTROL OF FITTING AREA LIGHTS. REFER TO EMS VENDOR DRAWINGS FOR ADDITIONAL INFORMATION.

10 KEYED SWITCH TO HOLD STOCKROOM ROOM CONTROLLERS ON DURING ELECTRICAL EQUIPMENT MAINTENANCE. PROVIDE PERMANENT TYPE WRITTEN LABEL ON COVERPLATE STATING "ELECTRICAL MAINTENANCE LIGHTING".

11 GRID ORNAMENTAL LIGHT FIXTURE. PROVIDE (1) SINGLE GANG JUNCTION BOX MOUNTED AT STRUCTURE. REFER TO DETAIL 2 ON THIS SHEET FOR ADDITIONAL INFORMATION.

12 INSTALL ROOM CONTROLLER IN AN ACCESSIBLE AND WELL-VENTILATED LOCATION. VERIFY FINAL LOCATION IN FIELD WITH CONSTRUCTION PROJECT MANAGER PRIOR TO ROUGH-IN.

13 MIRROR LIGHT. TAPE LIGHT INSTALLED ON FOUR SIDES OF MIRROR AND DRIVER MOUNTED BEHIND MIRROR. COORDINATE FINAL LOCATION WITH ARCHITECT PRIOR TO ROUGH-IN.

14 PROVIDE 0-10V DIMMING SWITCH FOR MANUAL CONTROL OF LIGHT FIXTURES AND LOCKABLE SWITCH COVER. REFER TO LIGHTING CONTROL DEVICE SCHEDULE FOR ADDITIONAL INFORMATION.

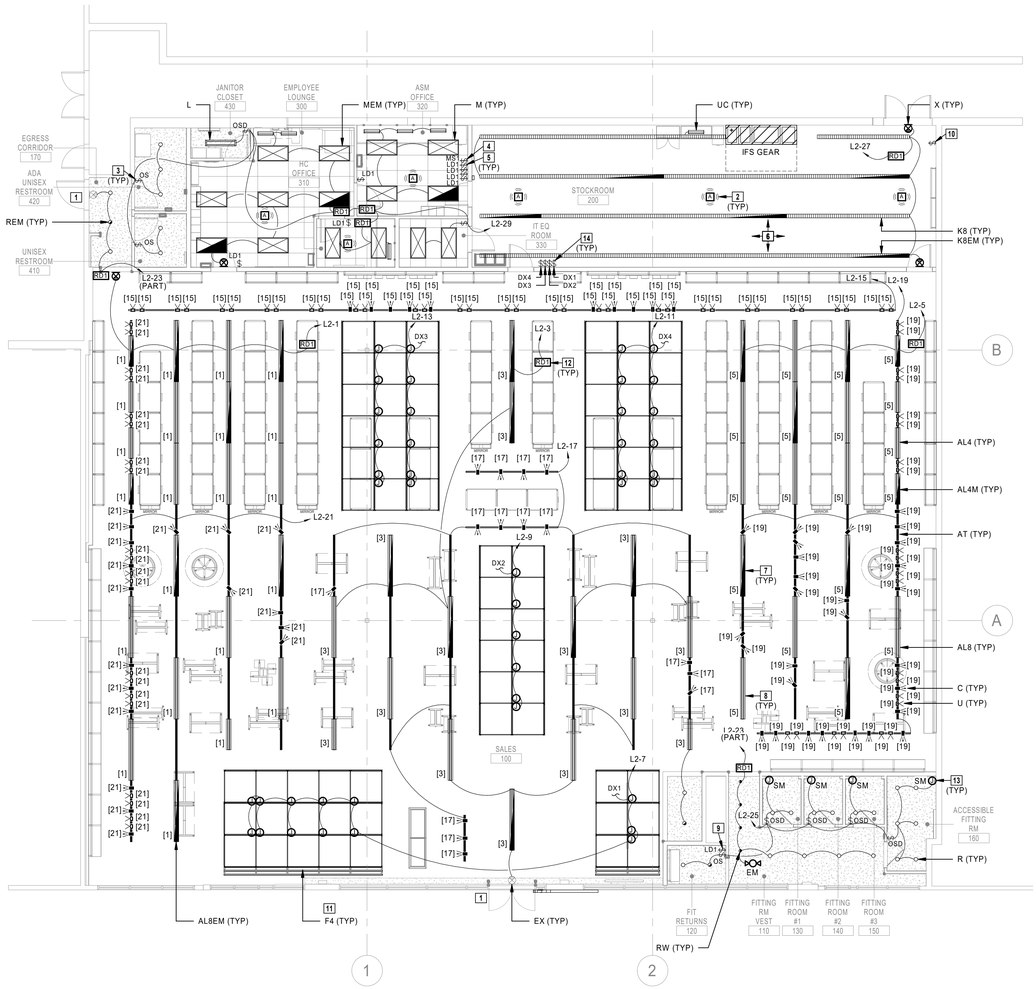

1 LIGHTING PLAN
1/8" = 1'-0"

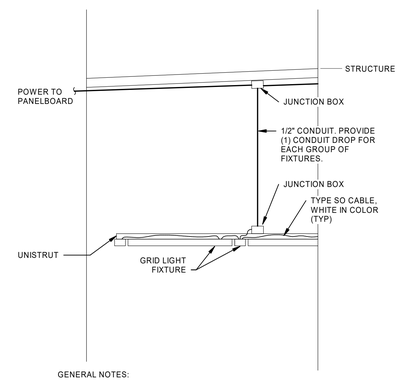

GENERAL NOTES:

1. PROVIDE TYPE 'SO' CABLE FROM JUNCTION BOX TO EACH GRID LIGHT FIXTURE. MAXIMUM OF 6 'SO' CABLES PER JUNCTION BOX. CONCEAL CABLES FROM VIEW TO GREATEST EXTENT POSSIBLE.

2. REFER TO ARCHITECTURAL DRAWINGS FOR MORE INFORMATION.

2 GRID LIGHTING MOUNTING DETAIL
12" = 1'-0"

Architect:

brr

ARCHITECT OF RECORD:
BRR ARCHITECTURE, INC
8131 METCALF AVE
SUITE 300
OVERLAND PARK, KS 66204

www.brrarch.com

TEL: 913-262-9095
FAX: 913-262-9044

COPYRIGHT NOTICE

This drawing was prepared for use on a specific site contemporaneously with its issue date and it is not suitable for use on a different project site or at a later time. Use of this drawing on another project or reuse on another project requires the services of properly licensed architects and engineers. Reproduction of this drawing for reuse on another project is not authorized and may be contrary to the law.

Engineer:

HENDERSON ENGINEERS
8345 LENEXA DRIVE, SUITE 300
LENEXA, KS 66214
TEL 913.742.5000 FAX 913.742.5001
WWW.HENDERSONENGINEERS.COM
2050003713
FL CORPORATE NO. EB 7606
EXPIRES 2/28/2021

Project Owner:

NIKE, Inc.
One Bowerman Drive
Beaverton, OR 97005
(503) 671-6453
www.nike.com

Project Address:

NIKE FACTORY STORE
WATERFORD LAKES SHOPPING CENTER
449 N. ALAFAYA TRAIL
ORLANDO, FL 32828
TEMPLATE ISSUE DATE: 11/26/2018

Fixture Package:

UNITE

Stamp:

THIS DOCUMENT IS RELEASED FOR THE PURPOSE OF PRELIMINARY SUBMITTAL
DEAN W. CHANDLER
LICENSE # 83831

IT IS NOT TO BE USED FOR CONSTRUCTION PURPOSES

DEAN W. CHANDLER
LICENSE # 83831

Issued For:

PERMIT/BID

Issue Date:

11/06/2020

Revisions:

NO.	REASON	DATE

PROJECT MANAGER:
KH

CHECKED BY:

DRAWN BY:
Author

Project Number:

62301411

Sheet Title:

ELECTRICAL LIGHTING PLAN

Sheet Number:

E1.0

DEAN W. CHANDLER

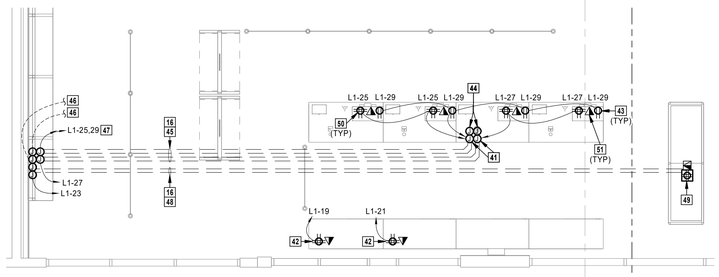

3 ENLARGED CASH WRAP POWER PLAN
1/4" = 1'-0"

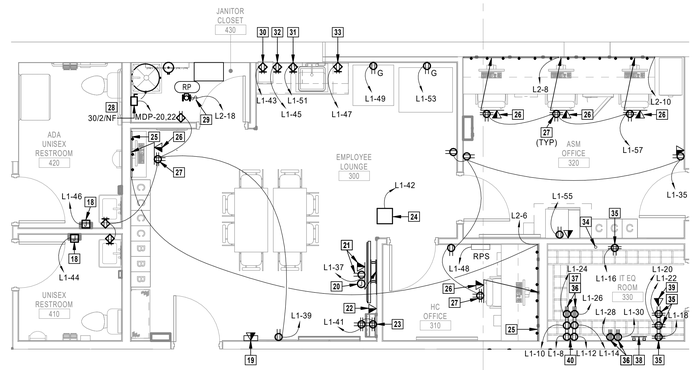

2 ENLARGED BACK OF HOUSE POWER PLAN
1/4" = 1'-0"

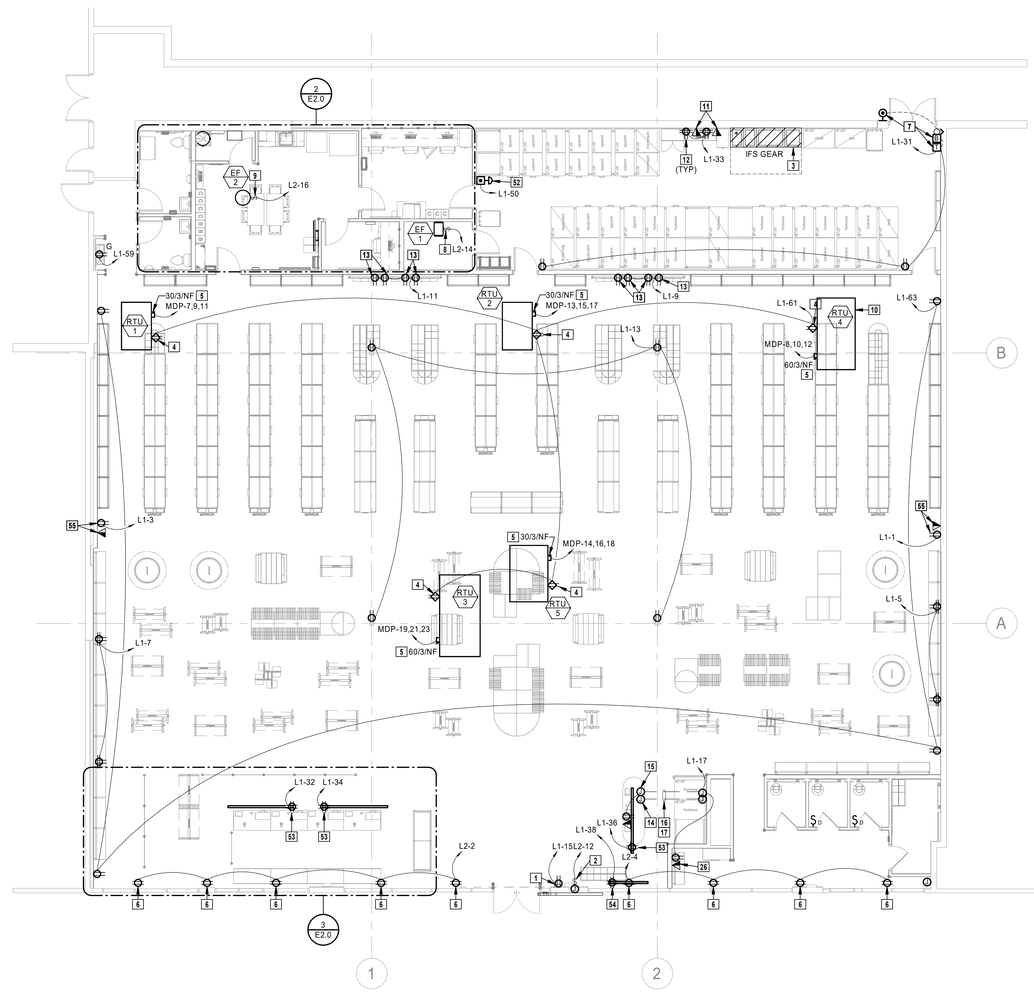

1 POWER PLAN
1/8" = 1'-0"

ELECTRICAL POWER GENERAL NOTES:

1. REFER TO SHEET E0.0 FOR ELECTRICAL GENERAL NOTES.
2. REFER TO SHEET E2.1 FOR DATA CONDUIT REQUIREMENTS AND COORDINATION.

ELECTRICAL POWER PLAN NOTES

1 ELECTRONIC ARTICLE SURVEILLANCE (EAS) SYSTEM. COORDINATE REQUIREMENTS WITH SYSTEM SUPPLIER AND PROVIDE ALL CONCEALED AND UNDER SLAB RACEWAYS, LINE VOLTAGE AND LOW VOLTAGE CONDUCTORS, ETC., AS NECESSARY FOR A COMPLETE AND FUNCTIONAL SYSTEM.

2 BUILDING SIGNAGE. PROVIDE WEATHERPROOF JUNCTION BOX WITH LOCKABLE TOGGLE DISCONNECT SWITCH AND CONNECT TO SIGNAGE AS REQUIRED. COORDINATE FINAL LOCATION AND REQUIREMENTS WITH SIGN INSTALLER AND ARCHITECT PRIOR TO ROUGH-IN.

3 EMS PANEL PROVIDED IN IFS SWITCHBOARD. PROVIDE CONNECTION OF TELE/DATA LINES TO KRONE FRAME AND TERMINATE AS DIRECTED BY NIKE IT DEPARTMENT. CONNECTION FOR CISCO SWITCHES (SWITCH 1 OR SWITCH 2) SHALL BE CONNECTED TO ANY PORT BETWEEN 13 AND 20. COORDINATE ALL REQUIREMENTS WITH EMS CONTRACTOR PRIOR TO ROUGH-IN AND FINAL CONNECTIONS.

4 CONVENIENCE RECEPTACLE. PROVIDE CONNECTION TO WEATHER RESISTANT GFCI TYPE RECEPTACLE IN WEATHER PROOF IN-USE ENCLOSURE (WP/GFCI/WR) INTEGRAL TO MECHANICAL EQUIPMENT. DO NOT POWER RECEPTACLE THROUGH UNIT. PROVIDE 120V HOME RUN AS INDICATED. COORDINATE FINAL LOCATION WITH MECHANICAL CONTRACTOR PRIOR TO ROUGH-IN.

5 ROOFTOP UNIT. PROVIDE CONNECTION TO DISCONNECT SWITCH INTEGRAL TO MECHANICAL EQUIPMENT. COORDINATE FINAL LOCATION, REQUIREMENTS AND POWER CONNECTION WITH MECHANICAL CONTRACTOR PRIOR TO ROUGH-IN.

6 SHOW WINDOW/DISPLAY WINDOW RECEPTACLE MOUNTED HORIZONTALLY WITHIN 18" ABOVE TOP OF WINDOW TO CENTER OF RECEPTACLE OR RECESSED WITHIN DISPLAY/SOFFIT. COORDINATE EXACT LOCATION WITH OTHER CEILING ELEMENTS. COVERPLATE FINISH SHALL MATCH SURROUNDING WALL COLOR.

7 RECEIVING BELL, PUSH BUTTON AND TRANSFORMER. PROVIDE PUSH BUTTON, EDWARDS #1786C-B, MOUNTED AT 48" ABOVE FINISHED GRADE. PROVIDE BELL, EDWARDS #3400-4G5, MOUNTED AT STRUCTURE ABOVE. PROVIDE TRANSFORMER, EDWARDS #592, MOUNTED NEXT TO BELL AT STRUCTURE. CONNECT ALL DEVICES AND PROVIDE ANY NECESSARY COMPONENTS TO ENSURE A FULLY FUNCTIONAL SYSTEM.

8 EXHAUST FAN TO BE INTERCONNECTED WITH TEMPERATURE SENSOR IN AV ROOM. PROVIDE CONNECTION TO DISCONNECT SWITCH INTEGRAL TO MECHANICAL EQUIPMENT AND COORDINATE INTERCONNECTION WITH MECHANICAL AND CONTROLS CONTRACTORS PRIOR TO ROUGH-IN.

9 EXHAUST FAN. PROVIDE CONNECTION TO DISCONNECT SWITCH INTEGRAL TO MECHANICAL EQUIPMENT. COORDINATE FINAL LOCATION, REQUIREMENTS AND POWER CONNECTION WITH MECHANICAL CONTRACTOR PRIOR TO ROUGH-IN.

10 EMS SENSOR MAST. PROVIDE 3/4" CONDUIT FROM OPUS CONTROL PANEL TO JUNCTION BOX MOUNTED TO UNDERSIDE OF ROOF. PROVIDE 3/4" RIGID CONDUIT WITH PULL WIRE FROM JUNCTION BOX TO EMS SENSOR MAST ON ROOF. SEAL ROOF PENETRATION PER SPECIFICATIONS. CONFIRM FINAL REQUIREMENTS, MOUNTING, LOCATIONS, AND CONDUIT ROUTING WITH MECHANICAL CONTRACTOR AND EMS VENDOR PRIOR TO ROUGH-IN.

11 DATA OUTLET, LOCATED WITHIN 10" OF QUAD RECEPTACLE. PROVIDE SQUARE 4-11/16" X 2-1/2" JUNCTION BOX WITH SINGLE GANG MUD RING MOUNTED AT 15" AFF UNLESS NOTED OTHERWISE. PROVIDE 1" CONDUIT FOR (2) DATA AND (2) VOICE CABLES ROUTED TO TELEPHONE BACKBOARD. REFER TO DETAIL 4 ON SHEET E3.3 FOR VOICE/DATA OUTLET CONFIGURATION.

12 ALL DEVICES SHOWN IN THIS AREA EXCEPT PLUGMOLD SHALL BE MOUNTED BELOW COUNTER UNLESS NOTED OTHERWISE.

13 FOOTWEAR INITIATIVE. REFER TO ARCHITECTURAL DRAWINGS FOR ELEVATIONS AND MOUNTING LOCATIONS.

14 PROVIDE (1) PULL BOX IN SERVICE HUB MOUNTED AT 6" AFF FOR DATA. COORDINATE FINAL LOCATION WITH OWNER AND CABINETRY PROVIDER PRIOR TO ROUGH-IN. ROUTE 1" FLEX CONDUIT TO RECEPTACLE FROM THE TOP OF THE PULL BOX.

15 PROVIDE (1) JUNCTION BOXES IN SERVICE HUB MOUNTED AT 6" AFF FOR POWER. COORDINATE FINAL LOCATION WITH OWNER AND CABINETRY PROVIDER PRIOR TO ROUGH-IN. ROUTE 1" FLEX CONDUIT FROM THE TOP OF THE JUNCTION BOX.

16 SAW CUT AND TRENCH AS REQUIRED FOR ELECTRICAL AND DATA CONDUITS. REPAIR TRENCH TO MATCH SURROUNDING CONSTRUCTION, MATERIALS AND FINISHES. COORDINATE ALL CUTTING/TRENCHING WITH OWNER AND LANDLORD REPRESENTATIVE PRIOR TO STARTING WORK. REFER TO ARCHITECTURAL DEMOLITION AND NEW WORK PLANS FOR ADDITIONAL INFORMATION.

17 ROUTE (1) 1-1/2" POWER AND (1) 1-1/2" DATA CONDUIT FROM SERVICE HUB WALL INTO JUNCTION BOXES AT STRUCTURE ABOVE.

18 HAND DRYER. PROVIDE JUNCTION BOX AT 42" AFF AND CONNECT TO EQUIPMENT. COORDINATE FINAL LOCATION AND ELECTRICAL REQUIREMENTS WITH ARCHITECT AND MANUFACTURER PRIOR TO ROUGH-IN.

19 EMPLOYEE TIME CLOCK. PROVIDE 4-11/16" X 2-1/2" JUNCTION BOX WITH SINGLE GANG MUD RING. PROVIDE 1" CONDUIT FOR (1) DATA AND (1) VOICE CABLES ROUTED TO IT EQUIPMENT ROOM. COORDINATE FINAL LOCATION AND MOUNTING HEIGHT WITH ARCHITECT PRIOR TO ROUGH-IN.

20 SATELLITE EQUIPMENT. PROVIDE 1" CONDUIT FROM TELEVISION EQUIPMENT TO JUNCTION BOX MOUNTED TO UNDERSIDE OF ROOF. PROVIDE 1" RIGID CONDUIT WITH PULL WIRE FROM JUNCTION BOX TO SATELLITE EQUIPMENT ON ROOF. SEAL ROOF PENETRATION PER SPECIFICATIONS. CONFIRM FINAL REQUIREMENTS, MOUNTING, LOCATIONS, AND CONDUIT ROUTING WITH ARCHITECT PRIOR TO ROUGH-IN.

21 WALL MOUNTED TELEVISION. MOUNT RECEPTACLE AND DATA OUTLET AT 7'-10" A.F.F. COORDINATE FINAL LOCATION AND MOUNTING HEIGHT WITH ARCHITECT PRIOR TO ROUGH-IN.

22 TELEVISION TOUCHPAD. PROVIDE DATA OUTLET AT 48" AFF. REFER TO ARCHITECTURAL DRAWINGS FOR ADDITIONAL INFORMATION.

23 RADIO DOCKING STATION. PROVIDE (2) 20 AMP QUAD RECEPTACLES FOR POWER FOR RADIO DOCKING STATION. COORDINATE EXACT LOCATION AND MOUNTING HEIGHT WITH ARCHITECT PRIOR TO ROUGH-IN.

24 DIFFUSER POWER MODULE FOR MODULATING DIFFUSERS. PROVIDE JUNCTION BOX MOUNTED ABOVE ACCESSIBLE CEILING. COORDINATE FINAL LOCATION, POWER REQUIREMENTS AND CONNECTIONS TO DAMPERS AND DIFFUSERS WITH MECHANICAL CONTRACTOR AND EMS SYSTEM PROVIDER PRIOR TO ROUGH-IN. REFER TO EMS DRAWINGS FOR ADDITIONAL INFORMATION.

25 DESK PLUGMOLD. WIREMOLD WH20GB606TRUSB OR APPROVED EQUAL PROVIDED BY OTHERS. PROVIDE PERMANENT LABEL STATING 'SWITCHED' SHOWING RECEPTACLES ARE CONTROLLED BY THE EMS SYSTEM. PROVIDE JUNCTION BOX AND PLUGMOLD AT 4" ABOVE COUNTER BACKSPLASH. CUT STANDARD PLUGMOLD LENGTHS AS NEEDED TO FIT AREAS INDICATED.

26 DATA OUTLET, LOCATED WITHIN 10" OF RECEPTACLE. PROVIDE SQUARE 4-11/16" X 4-11/16" X 2-1/2" JUNCTION BOX WITH SINGLE GANG MUD RING MOUNTED AT 15" AFF UNLESS NOTED OTHERWISE. PROVIDE 1" CONDUIT FOR (1) DATA AND (1) VOICE CABLES ROUTED TO IT EQUIPMENT ROOM. REFER TO DETAIL 3 ON SHEET E3.3 FOR VOICE/DATA OUTLET CONFIGURATION.

27 ALL DEVICES SHOWN, EXCEPT PLUGMOLD, SHALL BE MOUNTED BELOW COUNTER UNLESS NOTED OTHERWISE.

28 WATER HEATER. PROVIDE 2-POLE NON-FUSED DISCONNECT SWITCH IN NEMA 1 ENCLOSURE. COORDINATE FINAL LOCATION WITH DIVISION 22 CONTRACTOR TO ENSURE SWITCH IS ACCESSIBLE AND ALL CODE REQUIRED CLEARANCES ARE MET.

29 HOT WATER RECIRCULATION PUMP. PROVIDE 1-POLE MOTOR RATED TOGGLE DISCONNECT SWITCH. COORDINATE FINAL LOCATION AND REQUIREMENTS WITH DIVISION 22 CONTRACTOR.

30 MICROWAVE RECEPTACLE MOUNTED BELOW COUNTER TOP AT 26" AFF. COORDINATE FINAL LOCATION WITH ARCHITECT PRIOR TO ROUGH-IN.

31 RECEPTACLE FOR WATER FILTER LOCATED ON COUNTER. COORDINATE EXACT LOCATION AND POWER REQUIREMENTS WITH PLUMBING CONTRACTOR PRIOR TO ROUGH-IN.

32 MOUNT RECEPTACLE HORIZONTALLY 4" ABOVE COUNTER BACKSPLASH.

33 COFFEE MAKER LOCATED ON COUNTERTOP. MOUNT RECEPTACLE HORIZONTALLY 4" ABOVE COUNTER BACKSPLASH.

34 PROVIDE 1" CONDUIT FROM LADDER TRAY TO JUNCTION BOX AT SALES FLOOR, REFER TO DETAIL 6 ON SHEET E3.3 FOR ADDITIONAL INFORMATION.

35 PROVIDE DOUBLE DUPLEX RECEPTACLE FOR IT/SECURITY EQUIPMENT, EACH WITH A DEDICATED NEUTRAL AND GROUND. REFER TO DETAIL 6 ON SHEET E3.3 FOR ADDITIONAL INFORMATION.

36 PROVIDE L5-20R RECEPTACLE WITH A DEDICATED NEUTRAL AND GROUND ABOVE CABINET. REFER TO DETAIL 6 ON SHEET E3.3 FOR ADDITIONAL INFORMATION.

37 A/V HEAD-END EQUIPMENT/CABINET BY OTHERS. (3) 48 PORT PANELS MOUNTED WITHIN CABINET. PROVIDE 1" CONDUIT WITH PULL WIRE TO CABLE TV SERVICE ENTRANCE. MAKE CONNECTIONS AS DIRECTED BY NIKE PROJECT MANAGER.

38 PROVIDE INSULATED COPPER GROUND FROM NIKE IT GROUND BAR TO MAIN GROUND BAR IN IFS GEAR. REFER TO E3.0 FOR GROUND WIRE SIZE AND DETAIL 6 ON SHEET E3.3 FOR GROUND BAR LOCATION. PROVIDE GROUNDING KIT FOR CUPRO-COTE CAT.#A290-GRD.

39 SECURITY PHONE OUTLET. REFER TO DETAIL 6 ON SHEET E3.3 FOR ADDITIONAL INFORMATION.

40 PROVIDE (4) 20-AMP DUPLEX RECEPTACLES, EACH WITH A DEDICATED NEUTRAL AND GROUND, FOR LED TICKER POWER MODULE EQUIPMENT IN A/V CABINET.

41 PROVIDE (2) JUNCTION BOXES IN CASHWRAP MOUNTED AT 6" AFF FOR POWER. COORDINATE FINAL LOCATION WITH OWNER AND CABINETRY PROVIDER PRIOR TO ROUGH-IN. REFER TO DETAIL 7 ON SHEET E3.3 FOR ADDITIONAL INFORMATION. ALL 1" FLEX CONDUITS DAISY-CHAINED TO EACH RECEPTACLE TO BE ROUTED FROM THE TOP OF THE JUNCTION BOXES.

42 DRILL 2" OPENING IN BACK OF FIXTURE AND PROVIDE 20 AMP, DOUBLE DUPLEX RECEPTACLE, SURFACE MOUNTED ON BACK WALL ABOVE TOP SHELF. RECEPTACLE SHALL BE MOUNTED AT 26" AFF TO BOTTOM AND 48" FROM END OF FIXTURE TO SIDE OF RECEPTACLE. RECEPTACLE BOX SHALL CONCEAL 2" OPENING. COORDINATE INSTALLATION WITH FIXTURE VENDOR PRIOR TO ROUGH-IN.

43 20 AMP DUPLEX RECEPTACLE FOR GENERAL POWER. PROVIDE 1" FLEXIBLE TYPE CONDUIT ROUTED THROUGH CASHWRAP ACCESS CHASE FOR EACH CASHWRAP SECTION. ROUTE FROM JUNCTION BOX AT CONDUIT STUB UP DAISY-CHAINING TO THE FARTHEST RECEPTACLE.

44 PROVIDE (2) PULL BOXES IN CASHWRAP MOUNTED AT 6" AFF FOR DATA. COORDINATE FINAL LOCATION WITH OWNER AND CABINETRY PROVIDER PRIOR TO ROUGH-IN. REFER TO DETAIL 7 ON SHEET E3.3 FOR ADDITIONAL INFORMATION. ALL 1" FLEX CONDUITS TO EACH DATA OUTLET TO BE ROUTED FROM THE TOP OF THE PULL BOXES.

45 ROUTE (2) 1-1/2" POWER AND (2) 2" DATA CONDUIT FROM CASHWRAP WALL INTO JUNCTION BOXES AT STRUCTURE ABOVE. REFER TO DETAIL 7 ON SHEET E3.3 FOR JUNCTION BOX LOCATIONS AND ADDITIONAL INFORMATION.

46 ROUTE (2) 2-1/2" CONDUITS FOR DATA CABLING WITH BUSHINGS OVERHEAD TO THE TELEPHONE BACKBOARD IN A/V ROOM. MOUNT TIGHT TO BOTTOM OF ROOF STRUCTURE AND PARALLEL/PERPENDICULAR TO BUILDING LINES. PROVIDE PULLBOX FOR EVERY 100' OF LENGTH OR 180 DEGREES OF CONDUIT BENDS. BUNDLE CABLES LIKE TYPE FOR CONTINUATION TO A/V ROOM. CABLES SHALL BE BUNDLED WITH VELCRO STRAPS. REFER TO DETAIL 3 ON THIS SHEET FOR ADDITIONAL INFORMATION. CONFIRM ALL REQUIREMENTS WITH NIKE IT PRIOR TO ROUGH-IN.

47 PROVIDE DEDICATED NEUTRAL TO EACH CIRCUIT.

48 ROUTE (1) 3/4" POWER AND (1) 1" DATA CONDUIT FROM FLOOR BOX TO NEAREST WALL OR COLUMN.

49 FLUSH 2-GANG FLOOR BOX AND MOUNTING PLATES FURNISHED BY LIGHTING VENDOR. PROVIDE (1) DUPLEX RECEPTACLE AND (1) DATA OUTLET IN FLOOR BOX. COORDINATE EXACT LOCATION WITH ARCHITECTURAL DRAWINGS PRIOR TO ROUGH-IN.

50 20 AMP DOUBLE DUPLEX RECEPTACLE FOR CASHWRAP REGISTER. PROVIDE 1" FLEXIBLE TYPE CONDUIT ROUTED THROUGH CASHWRAP ACCESS CHASE FOR EACH CASHWRAP SECTION. ROUTE FROM JUNCTION BOX AT CONDUIT STUB UP DAISY-CHAINING TO THE FARTHEST RECEPTACLE.

51 DATA OUTLET. PROVIDE 1" FLEXIBLE TYPE CONDUIT ROUTED THROUGH CASHWRAP ACCESS CHASE TO EACH DATA OUTLET. DAISY-CHAINING DATA CONDUIT IS NOT ALLOWED. REFER TO DETAIL 5 ON SHEET E3.3 FOR VOICE/DATA OUTLET CONFIGURATION.

52 PROVIDE POWER CONNECTION AND PUSH BUTTON FOR MOTORIZED WATER SUPPLY SHUTOFF VALVE. REFER TO PLUMBING DRAWINGS AND SPECIFICATIONS FOR ADDITIONAL INFORMATION.

53 LED TICKER. REFER TO DETAIL 10 ON SHEET E3.3 FOR ADDITIONAL INFORMATION. PROVIDE ALL COMPONENTS SHOWN UNLESS OTHERWISE NOTED. PAINT THE CONDUIT AND JUNCTION BOX TO MATCH CEILING OR ROOF STRUCTURE COLOR. COORDINATE FINAL LOCATION AND CONFIRM REQUIREMENTS WITH NIKE IT PRIOR TO ROUGH IN.

54 WINDOW LED TICKER. REFER TO DETAIL 9 ON SHEET E3.3 FOR ADDITIONAL INFORMATION. PROVIDE ALL COMPONENTS SHOWN UNLESS OTHERWISE NOTED. PAINT THE CONDUIT AND JUNCTION BOX TO MATCH CEILING OR ROOF STRUCTURE COLOR. COORDINATE FINAL LOCATION AND CONFIRM REQUIREMENTS WITH NIKE IT PRIOR TO ROUGH IN.

55 GRAPHIC PANEL. PROVIDE DUPLEX RECEPTACLE AND DATA OUTLET AT +34" AFF TO THE CENTER OF DEVICES. THE DEVICES SHALL BE LOCATED WITH THE MIDPOINT BETWEEN THE TWO DEVICES POSITIONED AT THE CENTERLINE OF THE AISLE, WITH 6" SEPARATION BETWEEN THE DUPLEX RECEPTACLE AND DATA OUTLET.

DATA CONDUITS SHALL NOT BE DAISY-CHAINED.

Architect:

brr

ARCHITECT OF RECORD:
BRR ARCHITECTURE, INC
8131 METCALF AVE
SUITE 300
OVERLAND PARK, KS 66204

www.brrarch.com

TEL: 913-262-9095
FAX: 913-262-9044

COPYRIGHT NOTICE

This drawing was prepared for use on a specific site contemporaneously with its issue date and it is not suitable for use on a different project site or at a later time. Use of this drawing on another project or on another project requires the services of properly licensed architects and engineers. Reproduction of this drawing for reuse on another project is not authorized and may be contrary to the law.

Engineer:

HENDERSON ENGINEERS
8345 LENEXA DRIVE, SUITE 300
LENEXA, KS 66214
TEL 913.742.5000 FAX 913.742.5001
WWW.HENDERSONENGINEERS.COM
2050003713
FL CORPORATE NO. EB 7606
EXPIRES 2/28/2021

Project Owner:

NIKE, Inc.
One Bowerman Drive
Beaverton, OR 97005
(503) 671-6453
www.nike.com

Project Address:

NIKE FACTORY STORE
WATERFORD LAKES SHOPPING CENTER
449 N. ALAFAYA TRAIL
ORLANDO, FL 32828
TEMPLATE ISSUE DATE: 11/26/2018

Fixture Package:

UNITE

Stamp:

THIS DOCUMENT IS RELEASED FOR THE PURPOSE OF PRELIMINARY SUBMITTAL
DEAN W. CHANDLER
LICENSE # 83831

IT IS NOT TO BE USED FOR CONSTRUCTION PURPOSES

DEAN W. CHANDLER
LICENSE # 83831

Issued For:

PERMIT/BID

Issue Date:

11/06/2020

Revisions:

NO.	REASON	DATE

PROJECT MANAGER: KH
CHECKED BY:
DRAWN BY: Author

Project Number:

62301411

Sheet Title:

ELECTRICAL POWER PLAN

Sheet Number:

E2.0

DEAN W. CHANDLER

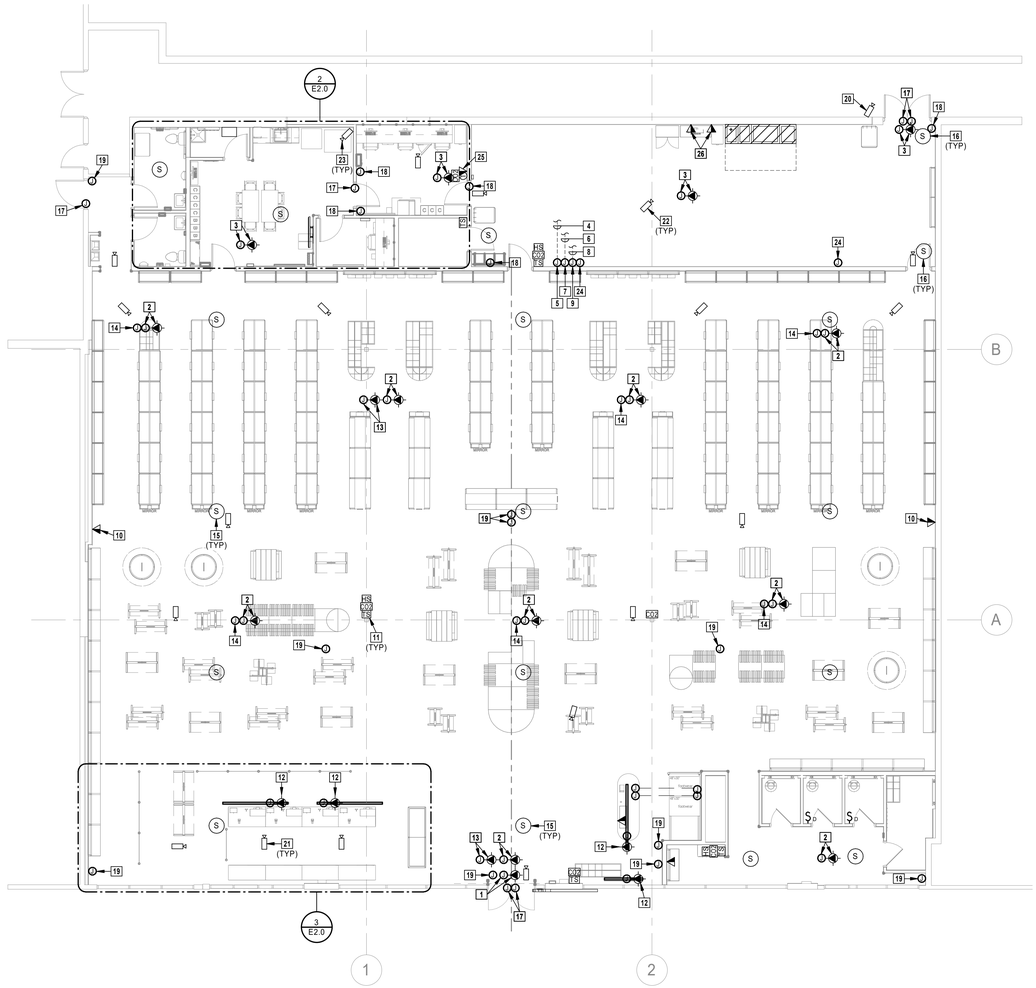

1 LOW VOLTAGE PLAN
1/8" = 1'-0"

ELECTRICAL LOW VOLTAGE GENERAL NOTES:

1. REFER TO SHEET E0.0 FOR ELECTRICAL GENERAL NOTES.
2. REFER TO SHEET E2.0 FOR CONDUIT REQUIREMENTS AND COORDINATION.
3. LOW VOLTAGE CONDUIT SHALL BE INSTALLED WITH NO MORE THAN 180 DEGREE TOTAL BENDS BETWEEN PULL POINTS.
4. LOCATE AND SET THERMOSTATS AND SENSORS AT LOCATIONS SHOWN ON PLANS. VERIFY EXACT LOCATIONS WITH ARCHITECT PRIOR TO INSTALLATION. INSTALL THERMOSTATS AND TEMPERATURE SENSORS WITH TOP OF DEVICE AT MAXIMUM 48" AFF TO MEET ADA REQUIREMENTS UNLESS NOTED OTHERWISE. CO2 SENSORS SHALL BE MOUNTED AT 54" AFF UNLESS NOTED OTHERWISE. HUMIDITY SENSORS SHALL BE BE MOUNTED BELOW TEMPERATURE SENSORS UNLESS NOTED OTHERWISE. PROVIDE INSULATED BACKING FOR THERMOSTATS MOUNTED ON EXTERIOR BUILDING WALLS.

ELECTRICAL LOW VOLTAGE PLAN NOTES

1 TRAFFIC COUNTER. PROVIDE (1) 4-11/16" SQUARE JUNCTION AND (1) 4" SQUARE JUNCTION BOX MOUNTED AT STRUCTURE. JUNCTION BOXES SHALL BE CENTERED ON THE DOOR, 4" FROM THE ENTRANCE. PROVIDE MOUNTING ASSEMBLY FOR THE TRAFFIC COUNTER AND INSTALL ON THE 4" SQUARE JUNCTION BOX. PROVIDE SINGLE GANG MUD RING AND (2) TELE/DATA OUTLETS ON THE 4-11/16" SQUARE JUNCTION BOX. REFER TO DETAIL 2 ON SHEET E3.3 FOR ADDITIONAL INFORMATION. PROVIDE ALL COMPONENTS SHOWN UNLESS OTHERWISE NOTED. HOMERUN 1" CONDUIT AND PULL STRING FROM TELE/DATA OUTLETS TO TELEPHONE BOARD IN IT EQUIPMENT ROOM. CONDUIT SHALL NOT BE DAISY CHAINED OR LOOPED. PAINT THE TRAFFIC COUNTER CONDUIT AND JUNCTION BOX TO MATCH CEILING OR ROOF STRUCTURE COLOR.

2 WIRELESS ACCESS POINT(WAP), SALES AREA/STOCKROOM. PROVIDE ONE 4" X 4" X 2-1/8" AND ONE 4-11/16" X 4-11/16" X 2-1/8" JUNCTION BOXES MOUNTED AT STRUCTURE. PROVIDE WAP MOUNTING ASSEMBLY AND MOUNT ON 4" X 4" X 2-1/8" JUNCTION BOX. PROVIDE (2) TELE/DATA OUTLETS ON 4-11/16" X 4-11/16" X 2-1/8" JUNCTION BOX. REFER TO DETAIL 1 ON SHEET E3.3 FOR ADDITIONAL INFORMATION. PROVIDE ALL COMPONENTS SHOWN UNLESS OTHERWISE NOTED. HOMERUN 1" CONDUIT AND PULL STRING FROM TELE/DATA OUTLETS TO WAP CONSOLIDATION PULLBOX OR TO HEAD-END EQUIPMENT INSIDE IT EQUIPMENT ROOM. WHICHEVER IS CLOSER. CONDUIT SHALL NOT BE DAISY CHAINED OR LOOPED. PAINT THE WAP CONDUIT AND JUNCTION BOX TO MATCH CEILING OR ROOF STRUCTURE COLOR. WAP SHALL NOT BE MOUNTED WITHIN 1'-0" OF LIGHT FIXTURE.

3 WIRELESS ACCESS POINT(WAP), BACK OF HOUSE. PROVIDE ONE 4-11/16" X 4-11/16" X 2-1/8" JUNCTION BOX WITH (2) TELE/DATA OUTLETS. PROVIDE WAP MOUNTING ASSEMBLY AND MOUNT BELOW ACCESSIBLE CEILING. REFER TO DETAIL 1 ON SHEET E3.3 FOR ADDITIONAL INFORMATION. PROVIDE ALL COMPONENTS SHOWN OTHERWISE NOTED. HOMERUN 1" CONDUIT AND PULL STRING FROM TELE/DATA OUTLETS TO WAP CONSOLIDATION PULLBOX ORTO HEAD-END EQUIPMENT INSIDE IT EQUIPMENT ROOM, WHICH EVER IS CLOSER. CONDUIT SHALL NOT BE DAISY CHAINED OR LOOPED. WAP SHALL NOT BE MOUNTED WITHIN 1'-0" OF LIGHT FIXTURE.

4 ROUTE (1) 2-1/2" CONDUIT FOR SECURITY/SURVEILLANCE CABLING WITH BUSHINGS OVERHEAD FROM PULLBOX TO SECURITY SYSTEM HEAD-END EQUIPMENT INSIDE IT EQUIPMENT ROOM. PROVIDE PULLBOX FOR EVERY 100' OF LENGTH OR 180 DEGREES OF CONDUIT BENDS. COORDINATE CONDUIT ROUTING WITH SECURITY VENDOR, AMERLUX LIGHTING AND DUCTWORK PRIOR TO ROUGH-IN.

5 PROVIDE 12"X12"X4" PULLBOX FOR SECURITY/SURVEILLANCE CABLING. PROVIDE GROMMETTED OPENINGS AS NECESSARY TO TRANSITION INDIVIDUAL CABLES INTO PULLBOX. MOUNT PULLBOX AT STRUCTURE UNLESS NOTED OTHERWISE. COORDINATE FINAL LOCATION WITH SECURITY VENDOR, AMERLUX LIGHTING AND DUCTWORK PRIOR TO ROUGH-IN.

6 ROUTE (1) 2" CONDUIT FOR AUDIO SYSTEM CABLING WITH BUSHINGS OVERHEAD FROM PULLBOX TO AUDIO SYSTEM HEAD END EQUIPMENT INSIDE IT EQUIPMENT ROOM. PROVIDE PULLBOX FOR EVERY 100' OF LENGTH OR 180 DEGREES OF CONDUIT BENDS. COORDINATE CONDUIT ROUTING WITH AUDIO SYSTEM VENDOR, LIGHTING AND DUCTWORK PRIOR TO ROUGH-IN.

7 PROVIDE 12"X12"X4" PULLBOX FOR AUDIO SYSTEM CABLING. PROVIDE GROMMETTED OPENINGS AS NECESSARY TO TRANSITION INDIVIDUAL CABLES INTO PULLBOX. MOUNT PULLBOX AT STRUCTURE UNLESS NOTED OTHERWISE. COORDINATE FINAL LOCATION WITH AUDIO SYSTEM VENDOR, AMERLUX LIGHTING AND DUCTWORK PRIOR TO ROUGH-IN.

8 ROUTE (1) 2" CONDUIT FOR WAP CABLING WITH BUSHING OVERHEAD FROM PULLBOX TO IT HEAD END EQUIPMENT IN IT EQUIPMENT ROOM. PROVIDE PULLBOX FOR EVERY 100' OF LENGTH OR 180 DEGREES OF CONDUIT BENDS. COORDINATE CONDUIT ROUTING WITH NIKE IT, LIGHTING AND DUCTWORK PRIOR TO ROUGH-IN.

9 PROVIDE 12"X12"X4" PULLBOX FOR WIRELESS ACCESS POINTS. PROVIDE GROMMETTED OPENINGS AS NECESSARY TO TRANSITION INDIVIDUAL CABLES INTO PULLBOX. MOUNT PULLBOX AT STRUCTURE UNLESS NOTED OTHERWISE. COORDINATE FINAL LOCATION WITH NIKE IT, AUDIO SYSTEM VENDOR, AMERLUX LIGHTING AND DUCTWORK PRIOR TO ROUGH-IN.

10 GRAPHIC PANEL. PROVIDE 1" CONDUIT AND PULL STRING FROM TELE/DATA OUTLETS TO TELEPHONE BOARD IN IT EQUIPMENT ROOM. REFER TO DETAIL 1 ON SHEET E2.0 FOR ADDITIONAL INFORMATION.

11 HVAC SENSOR. PROVIDE 3/4" CONDUIT FROM HVAC SENSOR TO HVAC EQUIPMENT AND EMS CONTROL PANEL AS REQUIRED. STACK SENSORS VERTICALLY TO CONSERVE WALL/COLUMN SPACE. PROVIDE SINGLE GANG WEATHER PROOF BELL BOX FOR ALL SURFACE MOUNTED SENSORS. CONFIRM FINAL REQUIREMENTS, MOUNTING, LOCATIONS, QUANTITIES, AND CONDUIT ROUTING WITH MECHANICAL CONTRACTOR AND EMS VENDOR PRIOR TO ROUGH-IN.

12 LED TICKER. PROVIDE (2) 1" CONDUITS WITH PULL WIRE FROM IT EQUIPMENT ROOM TO LED TICKER. REFER TO DETAIL 10 ON SHEET E3.3 FOR ADDITIONAL INFORMATION. PROVIDE ALL COMPONENTS SHOWN UNLESS OTHERWISE NOTED. PAINT THE CONDUIT AND JUNCTION BOX TO MATCH CEILING OR ROOF STRUCTURE COLOR.

13 HEAD END BEACON. PROVIDE 1" CONDUIT WITH PULL WIRE FROM IT EQUIPMENT ROOM TO JUNCTION BOX FOR DATA MOUNTED AT STRUCTURE. REFER TO DETAIL 11 ON SHEET E3.3 FOR ADDITIONAL INFORMATION. PROVIDE ALL COMPONENTS SHOWN UNLESS OTHERWISE NOTED. PAINT THE CONDUIT AND JUNCTION BOX TO MATCH CEILING OR ROOF STRUCTURE COLOR.

14 BEACON. REFER TO DETAIL 11 ON SHEET E3.3 FOR ADDITIONAL INFORMATION. PROVIDE ALL COMPONENTS SHOWN UNLESS OTHERWISE NOTED. PAINT THE CONDUIT AND JUNCTION BOX TO MATCH CEILING OR ROOF STRUCTURE COLOR.

15 AUDIO SYSTEM SPEAKER, SALES AREA. PROVIDE JUNCTION BOX AND 3/4" CONDUIT WITH PULL WIRE BETWEEN SPEAKERS. ROUTE CONDUIT TO IT EQUIPMENT ROOM. COORDINATE FINAL SPEAKER QUANTITIES, LOCATIONS, AND REQUIREMENTS WITH AUDIO SYSTEM VENDOR DRAWINGS PRIOR TO ROUGH-IN.

16 AUDIO SYSTEM SPEAKER, BACK OF HOUSE/STOCKROOM. PROVIDE 3/4" CONDUIT LOOP WITH PULL WIRE BETWEEN SPEAKERS IN BACK OF HOUSE AREAS TO IT EQUIPMENT ROOM. COORDINATE FINAL SPEAKER QUANTITIES, LOCATIONS, AND REQUIREMENTS WITH AUDIO SYSTEM VENDOR DRAWINGS PRIOR TO ROUGH-IN.

17 DOOR CONTACT. PROVIDE 2-GANG BOX MOUNTED TO STRUCTURE AND 3/4" CONDUIT WITH PULL STRING ROUTED TO IT EQUIPMENT ROOM. ROUTE CONDUIT THOUGH DOOR FRAME FROM TOP OF DOOR HEADER TO DOOR CONTACT DEVICE. REFER TO DETAIL 8 ON SHEET E3.3 FOR ADDITIONAL INFORMATION. COORDINATE CONDUIT ROUTING WITH NIKE PROJECT MANAGER AND SECURITY CONTRACTOR PRIOR TO ROUGH-IN.

18 SECURITY DEVICE, BACK OF HOUSE/STOCKROOM. PROVIDE 2-GANG BOX WITH SINGLE GANG MUD RING AND CONSOLIDATE ALL DEVICES TO (1) 1" CONDUIT WITH PULL STRING ROUTED TO SECURITY SYSTEM HEAD-END EQUIPMENT INSIDE IT EQUIPMENT ROOM.

19 SECURITY DEVICE, SALES AREA. PROVIDE 2-GANG BOX WITH SINGLE GANG MUD RING AND 3/4" CONDUIT WITH PULL STRING ROUTED TO NEAREST SECURITY CONSOLIDATION PULLBOX.

20 EXTERIOR SURVEILLANCE CAMERA. PROVIDE WEATHERPROOF 2-GANG BOX WITH SINGLE GANG MUD RING MOUNTED AT 10'-0" AFF AND 3/4" CONDUIT WITH PULL-STRING ROUTED TO TO SECURITY SYSTEM HEAD-END EQUIPMENT INSIDE IT EQUIPMENT ROOM AND 3/4" CONDUIT WITH PULL-STRING FROM CAMERA TO SECURITY MONITOR MOUNTED 12" ABOVE DOOR FRAME INSIDE STOCKROOM. SEAL WALL PENETRATION PER SPECIFICATIONS. COORDINATE FINAL LOCATION, REQUIREMENTS, AND JUNCTION BOX SIZE WITH SECURITY SYSTEM VENDOR PRIOR TO ROUGH-IN.

21 SURVEILLANCE CAMERA, SALES AREA. PENDANT MOUNT 2-GANG BOX AT SAME HEIGHT AS AMERLUX WITH ROUND MUD RING AND 3/4" CONDUIT ROUTED TO NEAREST SECURITY CONSOLIDATION PULLBOX.

22 SURVEILLANCE CAMERA, STOCKROOM. PROVIDE 2-GANG BOX MOUNTED TO STRUCTURE AND 3/4" CONDUIT WITH PULL STRING ROUTED TO SALES AREA SECURITY CONSOLIDATION PULLBOX OR TO SECURITY SYSTEM HEAD-END EQUIPMENT INSIDE IT EQUIPMENT ROOM, WHICHEVER IS CLOSER.

23 SURVEILLANCE CAMERA, BACK OF HOUSE CEILING. PROVIDE 2-GANG BOX WITH ROUND MUD RING AND 3/4" CONDUIT WITH PULL STRING ROUTED TO SECURITY SYSTEM HEAD-END EQUIPMENT INSIDE IT EQUIPMENT ROOM.

24 PROVIDE GROUNDING PLATE AND GROUND CONNECTION SET BY SHIELDING PAINT MANUFACTURER IN ACCESSIBLE LOCATION. PROVIDE A #12 AWG SHIELDED GROUND IN 1/2" CONDUIT PER THE SPECIFICATIONS TO GROUND BAR LOCATED IN THE IT EQUIP ROOM. PROVIDE A #12 GREEN GROUNDING CONDUCTOR TO THE NEAREST GROUND.

25 AUDIO SYSTEM TOUCHSCREEN CONTROLS. ALIGN WITH LIGHT SWITCHES. LIGHT SWITCHES HAVE PRIORITY NEAR DOOR. PROVIDE DUAL-GANG BOX WITH SINGLE GANG MUD RING MOUNTED AT 48" AFF AND 1" CONDUIT FOR DATA ROUTED TO IT EQUIPMENT ROOM. COORDINATE FINAL REQUIREMENTS WITH AUDIO SYSTEM VENDOR PRIOR TO ROUGH-IN.

26 DATA OUTLET, LOCATED WITHIN 10" OF RECEPTACLE. PROVIDE SQUARE 4-11/16" X 4-11/16" X 2-1/2" JUNCTION BOX WITH SINGLE GANG MUD RING MOUNTED AT 15" AFF UNLESS NOTED OTHERWISE. PROVIDE 1" CONDUIT FOR (1) DATA AND (1) VOICE CABLES ROUTED TO IT EQUIPMENT ROOM. REFER TO DETAIL 3 ON SHEET E3.3 FOR VOICE/DATA OUTLET CONFIGURATION.

DATA CONDUITS SHALL NOT BE DAISY-CHAINED.

Architect:

brr

ARCHITECT OF RECORD:
BRR ARCHITECTURE, INC
8131 METCALF AVE
SUITE 300
OVERLAND PARK, KS 66204

www.brrarch.com

TEL: 913-262-9995
FAX: 913-262-9044

COPYRIGHT NOTICE

This drawing was prepared for use on a specific site contemporaneously with its issue date and it is not suitable for use on a different project site or at a later time. Use of this drawing for construction on another project requires the services of properly licensed architects and engineers. Reproduction of this drawing for reuse on another project is not authorized and may be contrary to the law.

Engineer:

HENDERSON ENGINEERS
8345 LENEXA DRIVE, SUITE 300
LENEXA, KS 66214
TEL 913.742.5000 FAX 913.742.5001
WWW.HENDERSONENGINEERS.COM
2050003713
FL CORPORATE NO. EB 7606
EXPIRES 2/28/2021

Project Owner:

NIKE, Inc.
One Bowerman Drive
Beaverton, OR 97005
(503) 671-6453
www.nike.com

Project Address:

NIKE FACTORY STORE
WATERFORD LAKES SHOPPING CENTER
449 N. ALAFAYA TRAIL
ORLANDO, FL 32828
TEMPLATE ISSUE DATE: 11/26/2018

Fixture Package:

UNITE

Stamp:

THIS DOCUMENT IS RELEASED FOR THE PURPOSE OF PRELIMINARY SUBMITTAL
DEAN W. CHANDLER
LICENSE # 83831

IT IS NOT TO BE USED FOR CONSTRUCTION PURPOSES

DEAN W. CHANDLER
LICENSE # 83831

Issued For:

PERMIT/BID

Issue Date:

11/06/2020

Revisions:

NO.	REASON	DATE

PROJECT MANAGER:
KH

CHECKED BY:

DRAWN BY:
Author

Project Number:

62301411

Sheet Title:

ELECTRICAL LOW VOLTAGE PLAN

Sheet Number:

E2.1

DEAN W. CHANDLER

CIRCUIT SCHEDULE:

ALL CONDUCTOR SIZES ARE BASED ON 75 DEG C RATED TERMINATION AND COPPER CONDUCTORS WITH TYPE THHN/THWN-2 INSULATION. WHERE ALUMINUM CONDUCTORS ARE ALLOWED PER SPECIFICATIONS AND FOR TERMINATION OR INSULATION TYPES RATED LESS THAN 75 DEG C, MODIFY SIZES ACCORDING TO NFPA 70.

FEEDER TAG	FEEDER DESCRIPTION
123	(3)#1, (1)#6G, 1-1/2" C
404A	(4)-500kcmil, (1)#3G, 3-1/2" C
D1	EMS CABLING PROVIDED WITH IFS SYSTEM
E404A	EXISTING (4)-500kcmil, (1)#3G, 3-1/2" C
ES404	EXISTING (4)-500kcmil, 3-1/2"C
G300	#2 COPPER GROUND, 3/4" C
G500	#1/0 COPPER GROUND, 3/4" C
T154	(4)#1/0, (1)#6G, 2" C
TG000	#3/0 cu

TENANT LOAD SUMMARY (MDP)

TENANT OCCUPANCY TYPE: STORE
TENANT SQUARE FOOTAGE: 11120
SERVICE DESCRIPTION: 480Y/277 V

LOAD TYPE	CONNECTED LOAD	DEMAND FACTOR	NEC DEMAND
EXISTING LOAD (E)	0 VA	100%	0 VA
COOLING (C)	67634 VA	100%	67634 VA
HEATING (H)	0 VA	0%	0 VA
LIGHTING (L) (PER NEC-220)	29248 VA	125%	36559 VA
RECEPTACLES (R)	31040 VA	66%	20520 VA
MOTORS (M)	22007 VA	100%	22007 VA
SUPPLEMENTAL HEAT (U)	2000 VA	100%	2000 VA
MISC EQUIP (Z)	3760 VA	100%	3760 VA
REFRIGERATION (F)	0 VA	100%	0 VA
SIGN/DISPLAY (D)	1200 VA	125%	1500 VA
KITCHEN (K)	0 VA	100%	0 VA
LARGEST MOTOR	10018 VA	125%	12523 VA
SHOW WINDOW (W)	0 VA	125%	0 VA
TRACK LIGHTING	6900 VA	100%	6900 VA
TOTAL LOAD	173807	VA	173403
TOTAL AMPACITY	209	AMPS	209
SERVICE AMPACITY		AMPS	400
SPARE CAPACITY		AMPS	191

FEEDER LENGTH BETWEEN TENANT DISCONNECT AND IFS EQUIPMENT IS APPROXIMATELY 75 FEET. CONTRACTOR TO FIELD VERIFY EXACT DISTANCE AND NOTIFY ENGINEER OF ANY CHANGES.

FINAL ELECTRICAL CONNECTION TO BE PERFORMED BY THE LANDLORD'S ELECTRICIAN AT THE TENANT'S EXPENSE.

UTILITY COMPANY: *OUC*
CONTACT: *CUSTOMER SERVICE*
PHONE NUMBER: *407.423.9018*

FAULT CURRENT INFORMATION HAS NOT BEEN MADE AVAILABLE TO HENDERSON ENGINEERS, INC AT THIS TIME. FAULT CURRENT CALCULATIONS ARE BASED ON AN APPROXIMATE UTILITY TRANSFORMER SIZE OF 1000KVA, 5.0%Z, AND INFINITE PRIMARY. *24,085* AMPS FCA AT THE LANDLORDS DISTRIBUTION EQUIPMENT. CONTRACTOR TO FIELD VERIFY FCA AT LOCATION 'F1' INDICATED AND REPORT FINDINGS TO ENGINEER.

NOTE:
ALL SURGE SUPPRESSION EQUIPMENT SHALL BE PURCHASED FROM 'SURGE SUPPRESSION INCORPORATED' ONLY. CONTACT WILL BANKER AT (352)799-6986 OR WBANKER@SURGESUPPRESSION.COM FOR ORDERING AND OTHER INFORMATION.

ALL EMS EQUIPMENT SHALL BE PURCHASED FROM 'COMFORT SYSTEMS USA' ONLY. CONTACT PAUL SAWYER AT (317) 246-5170 OR PAUL.SAWYER@COMFORTSYSTEMSUSA.COM FOR ORDERING AND ADDITIONAL INFORMATION.

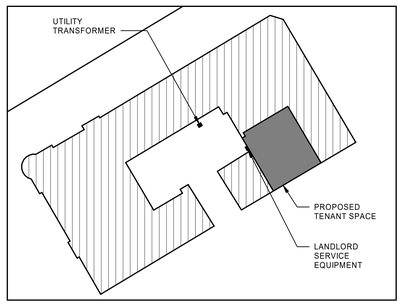

3 ELECTRICAL SITE KEY PLAN
NTS

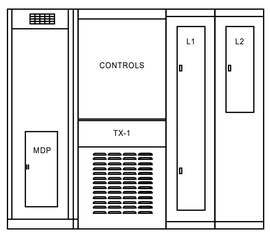

2 IFS ELEVATIONS
NTS

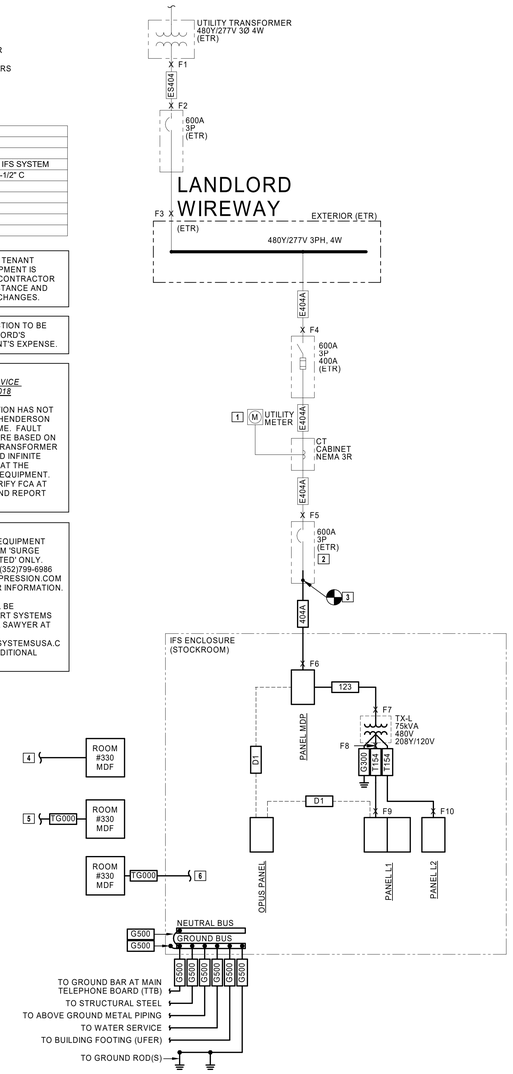

1 ELECTRICAL ONELINE
NTS

GENERAL ONE-LINE NOTES:

1. INFORMATION SHOWN ON TENANT DRAWINGS IS INTENDED TO INDICATE MINIMUM REQUIREMENTS TO MEET THE NEEDS OF THE TENANT. VERIFY EXISTING CONDITIONS, CAPACITIES, AND OTHER PROVISIONS BY OTHERS PER TENANT LEASE AGREEMENT PRIOR TO BEGINNING CONSTRUCTION.
2. OBTAIN A COPY AND REVIEW LANDLORD'S LATEST EDITION OF THEIR TENANT DESIGN AND CONSTRUCTION CRITERIA AND COMPLY WITH ALL REQUIREMENTS. WHERE CONFLICTS OCCUR BETWEEN THE CRITERIA DOCUMENTS AND THE CONSTRUCTION DOCUMENTS, THE MOST STRINGENT REQUIREMENT WILL GOVERN.
3. ALL CONDUCTOR LENGTHS PROVIDED IN THESE DESIGN DOCUMENTS ARE INTENDED SOLELY FOR USE IN THE DESIGN CALCULATIONS BY THE DESIGN PROFESSIONAL UNLESS SPECIFICALLY NOTED OTHERWISE IN THE DOCUMENTS. THEY SHALL NOT BE USED BY CONTRACTORS IN BIDDING OR CONSTRUCTING THE PROJECT. THE CONTRACTOR IS SOLELY RESPONSIBLE FOR THE MATERIAL QUANTITIES REQUIRED TO BID AND CONSTRUCT THE COMPLETE PROJECT.
4. PROVIDE COMPLETE TYPEWRITTEN IDENTIFICATION DIRECTORY CARD FOR ALL MAIN AND BRANCH CIRCUITS IN THE PANELBOARD DOORS.
5. "EXISTING" CONDITIONS SHOWN REFLECT INFORMATION PROVIDED BY THE LANDLORD.
6. ALL NEW WORK SHALL BE COORDINATED WITH LANDLORD AND SHALL BE IN ACCORDANCE WITH LANDLORD'S REQUIREMENTS.
7. THE USE OF 'BX', 'ROMEX', OR 'AC' IS NOT PERMITTED.
8. 'F#' REPRESENTS FAULT POINT F# AS CALCULATED IN TABLE BELOW.

ONE-LINE NOTES:

1 EXISTING UTILITY METER INSTALLED IN METER SOCKET TO REMAIN. LANDLORD TO COORDINATE EXISTING METER NUMBER WITH UTILITY COMPANY UPON TRANSFER.
2 CONTRACTOR TO VERIFY THIS IS POINT OF SERVICE ENTRANCE AND NEUTRAL AND GROUND ARE BONDED TOGETHER AND TO THE GROUNDING ELECTRODE SYSTEM.
3 DEMOLISH EXISTING PANELBOARDS AND EXTEND EXISTING CONDUIT AND CONDUCTORS TO IFS GEAR. FIELD VERIFY CONDUIT SIZE MATCHES CONDUIT SIZE INDICATED. COORDINATE ALL REQUIREMENTS WITH LANDLORD PRIOR TO ROUGH-IN. REPORT ANY DISCREPANCIES TO THE ARCHITECT AND ENGINEER.
4 PROVIDE EMPTY 2" CONDUIT FROM BUILDING TELEPHONE RISER CLOSET TO IT/AV RACK. FIELD VERIFY EXACT ROUTE FOR INSTALLATION OF ELECTRICAL AND TELEPHONE SERVICES PRIOR TO BID.
5 PROVIDE GROUNDING CONDUCTOR FROM EXISTING BUILDING TELEPHONE GROUNDING SYSTEM TO NEW TELEPHONE BACKBOARD IN AV ROOM.
6 PROVIDE GROUNDING CONDUCTOR FROM GROUND BAR IN AV/IT ROOM TO MAIN GROUND BAR IN IFS EQUIPMENT.

Short-Circuit and Voltage Drop Calculations

Distances are for calculation purposes only and shall not be used for contractor takeoffs nor bidding - Contractor shall notify Engineer of any field condition that results in a change of 10% or greater circuit distance

The...
ISC (2) = ISC(1) x M(1) — M= 1/(1+f)
ISC (1) = short circuit current at fault point 1
ISC (2) = short circuit current at fault point 2

Feeder: f (3Ø) = 1.732 x L x Isc / C x E
Feeder: f (1Ø)= 2 x L x Isc / C x E

XFMR: f (3Ø) = IP(sca)x Vp x 1.73 x %Z / 100,000 x KVA
XFMR: f (1Ø)= IP(sca)x Vp x %Z / 100,000 x KVA

IS(sca)= Vp x M x IP(sca) / Vs

VOLTAGE DROP (3Ø):
%VD= ((R x cos(arccos(pf)) + X x sin (arccos(pf))) x L/# x I x 1.73) / E
VOLTAGE DROP (1Ø):
%VD= ((R x cos(arccos(pf)) + X x sin(arccos(pf))) x 2 x L/# x I) / E

IP = Primary short circuit current
Vp = Primary voltage
IS= Secondary short circuit current
Vs= Secondary voltage
L = Length of circuit — E = Line to line volts
C = "C" Factor from Bussman table where "C" = 1 / impedance per linear foot
Feeder Types =
NM - Non Magnetic Conduit, M - Magnetic Conduit, FB - Feeder Busway, PB - Plug-in Busway, TX - Transformer

%VD CUM= Cumulative Voltage Drop from Fault Point 1 to Fault Point #
R= resistance in ohms per LF
X= reactances in ohms per LF

Date of Calculations: 11/06/2020
System Voltage: 480Y/277V - 3 phase

Fault Point (F#)	Bus/Feeder Description	Source (Fault Point)	Phase	Source Isc (amps)	Feeder: Conduit Type/ TX	Feeder: Material	Feeder: Quantity of Parallel Sets and Bus/ Phase & Neutral Size	Conductor 'C' Value	Busway 'C' Value	L-L Voltage (E)	Circuit Length (L)	Load Power Factor (pf)	Circuit Load (Amperage)	Conductor: Resistance (R)	Conductor: Reactance (X)	Conductor: Arccos (pf) (Radians)	Transformer: Type	Transformer: Degree Rise	Transformer: kVA	Transformer: New Xfmr Z	Transformer: Existing Xfmr Z	Transformer: Secondary Voltage	Transformer: Tap Setting	f	M	Fault Current (amps)	Voltage Drop (%VD)	Cumulative Voltage Drop (%VD)	Fault Point (F#)
1	Utility Service Point			24,085 at the secondary of the utility transformer																			Source Isc + 6X Motor Contribution =			24805			1
	Motor Contribution			120 The connected full load motor amps (includes compressors) on the system																									
2	To Landlord Main Disconnect Switch	1	3	24805	M	CU	1 Set(s) of 500 kcmil	22185	--	480	25	0.9	480	0.000029	0.000048	0.451027								0.101	0.91	22532	-0.20%	-0.20%	2
3	To Landlord Wireway	2	3	22532	M	CU	1 Set(s) of 500 kcmil	22185	--	480	120	0.9	480	0.000029	0.000048	0.451027								0.440	0.69	15650	-0.98%	-1.18%	3
4	To Service Disconnect	3	3	15650	M	CU	1 Set(s) of 500 kcmil	22185	--	480	5	0.9	320	0.000029	0.000048	0.451027								0.013	0.99	15453	-0.03%	-1.21%	4
5	To Tenant Disconnect	4	3	15453	M	CU	1 Set(s) of 500 kcmil	22185	--	480	5	0.9	320	0.000029	0.000048	0.451027								0.013	0.99	15261	-0.03%	-1.24%	5
6	To Panel 'MDP'	5	3	15261	M	CU	1 Set(s) of 500 kcmil	22185	--	480	75	0.9	320	0.000029	0.000048	0.451027								0.186	0.84	12866	-0.41%	-1.64%	6
7	To Transformer 'TX-L'	6	3	12866	M	CU	1 Set(s) of 1 AWG	7293	--	480	5	0.9	320	0.000160	0.000057	0.451027								0.032	0.97	12469	-0.10%	-1.74%	7
8	Transformer 'TX'L'	7	3	12469	TX					480							DOE	150	75	4.05		208		5.598	0.15	4361		-1.74%	8
9	To Panel 'L1'	8	3	4361	M	CU	1 Set(s) of 1/0 AWG	8925	--	208	5	0.9	120	0.000120	0.000055	0.451027								0.020	0.98	4274	-0.07%	-1.81%	9
10	To Panel 'L2'	8	3	4361	M	CU	1 Set(s) of 1/0 AWG	8925	--	208	5	0.9	120	0.000120	0.000055	0.451027								0.020	0.98	4274	-0.07%	-1.81%	10
11	RTU-1	6	3	12866	M	CU	1 Set(s) of 12 AWG	617	--	480	120	0.85	10	0.002000	0.000068	0.554811								9.029	0.10	1283	-0.75%	-2.39%	11
12	RTU-2	6	3	12866	M	CU	1 Set(s) of 12 AWG	617	--	480	75	0.85	11	0.002000	0.000068	0.554811								5.643	0.15	1937	-0.52%	-2.16%	12
13	RTU-3	6	3	12866	M	CU	1 Set(s) of 8 AWG	1557	--	480	125	0.85	40.1	0.000780	0.000065	0.554811								3.727	0.21	2722	-1.26%	-2.90%	13
14	RTU-4	6	3	12866	M	CU	1 Set(s) of 8 AWG	1557	--	480	60	0.85	29	0.000780	0.000065	0.554811								1.789	0.36	4613	-0.44%	-2.08%	14
15	RTU-5	6	3	12866	M	CU	1 Set(s) of 10	981	--	480	105	0.85	28	0.001200	0.000063	0.554811								4.969	0.17	2155	-1.12%	-2.76%	15

Architect:
brr
ARCHITECT OF RECORD:
BRR ARCHITECTURE, INC
8131 METCALF AVE
SUITE 300
OVERLAND PARK, KS 66204
www.brrarch.com
TEL: 913-262-9995
FAX: 913-262-9044

COPYRIGHT NOTICE
This drawing was prepared for use on a specific site contemporaneously with its issue date and it is not suitable for use on a different project site or at a later time. Use of this drawing for construction on another project requires the services of properly licensed architects and engineers. Reproduction of this drawing for reuse on another project is not authorized and may be contrary to the law.

Engineer:
HENDERSON ENGINEERS
8345 LENEXA DRIVE, SUITE 300
LENEXA, KS 66214
TEL 913.742.5000 FAX 913.742.5001
WWW.HENDERSONENGINEERS.COM
2050003713
FL CORPORATE NO. EB 7606
EXPIRES 2/28/2021

Project Owner:
NIKE, Inc.
One Bowerman Drive
Beaverton, OR 97005
(503) 671-6453
www.nike.com

Project Address:
NIKE FACTORY STORE
WATERFORD LAKES SHOPPING CENTER
449 N. ALAFAYA TRAIL
ORLANDO, FL 32828
TEMPLATE ISSUE DATE: 11/26/2018

Fixture Package:
UNITE

Stamp:
THIS DOCUMENT IS RELEASED FOR THE PURPOSE OF PRELIMINARY SUBMITTAL
DEAN W. CHANDLER
LICENSE # 83831

IT IS NOT TO BE USED FOR CONSTRUCTION PURPOSES

DEAN W. CHANDLER
LICENSE # 83831

Issued For:
PERMIT/BID

Issue Date:
11/06/2020

Revisions:

NO.	REASON	DATE

PROJECT MANAGER: KH
CHECKED BY:
DRAWN BY: Author

Project Number:
62301411

Sheet Title:
ELECTRICAL ONE-LINE DIAGRAM AND SCHEDULES

Sheet Number:
E3.0

DEAN W. CHANDLER

PANELBOARD ABBREVIATION LEGEND

MF - WIRED BY IFS MANUFACTURER
SR - BREAKERS SHALL BE SERIES RATED WITH PANELBOARD 'H' BRANCH CIRCUIT BREAKERS
EM - EMERGENCY LIGHTING
HT# - PROVIDE HANDLE-TIE FOR BREAKERS SHARING NEUTRALS
Z# - LIGHTING CONTROL ZONE. REFER TO LIGHTING ZONE CONTROL SCHEDULE ON SHEET E3.2
TB - CIRCUIT TERMINATED ON TERMINAL BLOCK. REFER TO DETAIL 4 ON SHEET E3.2
GF - GFCI TYPE CIRCUIT BREAKER
LCK - HANDLE PADLOCKABLE-OFF DEVICE
FA - RED / HANDLE-ON CLAMP
VD - WIRE UPSIZED FOR VOLTAGE DROP

PANELBOARD: MDP (NEW)

EQUIPMENT GROUND BUS

BUS AMPS: 400A
MAIN SIZE/TYPE: 400A M.C.B.
VOLTS/PHASE: 480Y/277 V 3P/4W
SUPPLIED BY: UTILITY

STORE
TENANT SQUARE FOOTAGE: 11120

FAULT CURRENT: 12,866A
AIC RATED: FULLY RATED
AIC RATING: FCA +10% MINIMUM
SERVES: NIKE STORE
MOUNTING: SURFACE
LOCATION: IFS (STOCKROOM)

SERVICE ENTRANCE RATED

LINE-SIDE LUGS: MECHANICAL

CKT NO.	DESCRIPTION	LOAD TYPE	NOTES	WIRE SIZE	BKR AMP	P	PHASE A		PHASE B		PHASE C		P	BKR AMP	WIRE SIZE	NOTES	LOAD TYPE	DESCRIPTION	CKT NO.
1							19126	0											2
3	TX-L	--		OL	125	3			20660	0			3	30				SURGE SUPPRESSOR	4
5											18523	0							6
7							2771	8037											8
9	RTU-1	C M		12	15	3			2771	8037			3	35	8		C M	RTU-4	10
11											2771	8037							12
13							3048	7760											14
15	RTU-2	C M		12	15	3			3048	7760			3	30	10		C M	RTU-5	16
17											3048	7760							18
19							11113	1000					2	20	12		U	WH	20
21	RTU-3	C M		8	50	3			11113	1000									22
23											11113	0	1					EQUIPPED SPACE	24
25	EQUIPPED SPACE					1	0	0					1					EQUIPPED SPACE	26
27	EQUIPPED SPACE					1			0	0			1					EQUIPPED SPACE	28
29	EQUIPPED SPACE					1					0	0	1					EQUIPPED SPACE	30
31	EQUIPPED SPACE					1	0	0					1					EQUIPPED SPACE	32
33	EQUIPPED SPACE					1			0	0			1					EQUIPPED SPACE	34
35	EQUIPPED SPACE					1					0	0	1					EQUIPPED SPACE	36
37							0	0					1					EQUIPPED SPACE	38
39	KW METER				20	3			0	0			1					EQUIPPED SPACE	40
41											0	0	1					EQUIPPED SPACE	42
				TOTAL LOAD (VA):			52855 VA		54389 VA		51252 VA								
				TOTAL AMPS:			192 A		197 A		185 A								

LOAD TYPE	CONNECTED LOAD	DEMAND FACTOR	NEC DEMAND
EXISTING LOAD (E)	0 VA	100%	0 VA
COOLING (C)	67634 VA	100%	67634 VA
HEATING (H)	0 VA	0%	0 VA
LIGHTING (L) (PER NEC-220)	29248 VA	125%	36559 VA
RECEPTACLES (R)	31040 VA	66%	20520 VA
MOTORS (M)	22007 VA	100%	22007 VA
SUPPLEMENTAL HEAT (U)	2000 VA	100%	2000 VA
MISC EQUIP (Z)	3760 VA	100%	3760 VA
REFRIGERATION (F)	0 VA	100%	0 VA
SIGN/DISPLAY (D)	1200 VA	125%	1500 VA
KITCHEN (K)	0 VA	100%	0 VA
LARGEST MOTOR	10018 VA	125%	12523 VA
SHOW WINDOW (W)	0 VA	125%	0 VA
TRACK LIGHTING	6900 VA	100%	6900 VA

PANELBOARD NOTES

PANELBOARD TOTALS	
TOTAL CONNECTED LOAD	173807 VA
TOTAL NEC LOAD	173403 VA
TOTAL CONNECTED CURRENT	209 A
TOTAL NEC DEMAND CURRENT	209 A

PANELBOARD: L1 (NEW)

EQUIPMENT GROUND BUS

BUS AMPS: 150A
MAIN SIZE/TYPE: 150A M.C.B.
VOLTS/PHASE: 208Y/120 V 3P/4W
SUPPLIED BY: MDP VIA TX-L

FAULT CURRENT: 4,274A
AIC RATED: FULLY RATED
AIC RATING: FCA +10% MINIMUM
SERVES: NIKE STORE
MOUNTING: SURFACE
LOCATION: IFS (STOCKROOM)

LINE-SIDE LUGS: MECHANICAL

CKT NO.	DESCRIPTION	LOAD TYPE	NOTES	WIRE SIZE	BKR AMP	P	PHASE A		PHASE B		PHASE C		P	BKR AMP	WIRE SIZE	NOTES	LOAD TYPE	DESCRIPTION	CKT NO.
1	RCPT - E GRAPHICS	R		12	20	1	180	0											2
3	RCPT - W GRAPHICS	R		12	20	1			180	0			3	30				SURGE SUPPRESSOR	4
5	RCPT - E APPAREL WALL	R		12	20	1					720	0							6
7	RCPT - W APPAREL WALL	R		12	20	1	720	300					1	20	10		R	RCPT - IT TICKER 1	8
9	RCPT - FOOTWEAR E	R		12	20	1			720	300			1	20	10		R	RCPT - IT TICKER 2	10
11	RCPT - FOOTWEAR W	R		12	20	1					720	300	1	20	10		R	RCPT - IT TICKER 3	12
13	RCPT - SALES COLUMNS	R		12	20	1	720	300					1	20	10		R	RCPT - IT TICKER 4	14
15	RCPT - EAS SYSTEM	R		12	20	1			180	360			1	20	12		R	RCPT - IT ROOM 1	16
17	RCPT - SERVICE HUB	R		12	20	1					360	360	1	20	12		R	RCPT - IT ROOM 2	18
19	RCPT - CHARGING 1	R		12	20	1	360	360					1	20	12		R	RCPT - IT ROOM 3	20
21	RCPT - CHARGING 2	R		12	20	1			360	360			1	20	12		R	RCPT - IT ROOM 4	22
23	RCPT - FRONT CABINET	R		12	20	1					360	1000	1	20	12		R	RCPT - AV RACK 1	24
25	RCPT - CASH WRAP COMP 1	R		12	20	1	720	1000					1	20	12		R	RCPT - AV RACK 2	26
27	RCPT - CASH WRAP COMP 2	R		12	20	1			720	1000			1	20	12		R	RCPT - IT RACK 1	28
29	RCPT - CASH WRAP GEN	R		12	20	1					720	1000	1	20	12		R	RCPT - IT RACK 2	30
31	RCPT - STOCKROOM / BELL	R Z		12	20	1	870	360					1	20	12		R	RCPT - SALES TICKER 1	32
33	RCPT - STOCK RCVG DESK	R		12	20	1			720	360			1	20	12		R	RCPT - SALES TICKER 2	34
35	RCPT - BOH GEN 2	R		12	20	1					1080	360	1	20	12		R	RCPT - SALES TICKER 3	36
37	RCPT - LOUNGE TV	R		12	20	1	180	360					1	20	12		R	RCPT - SALES TICKER 4	38
39	RCPT - BOH GEN 1	R		12	20	1			1080	500			1	20	12		Z	PWR - OPUS	40
41	RCPT - RADIO SHELF	R		12	20	1					720	200	1	20	12		Z	PWR - VAV MODULE	42
43	RCPT - MICROWAVE	R		12	20	1	1200	1000					1	20	12	LCK	Z	PWR - RR HAND DRYER	44
45	RCPT - COUNTERTOP L	R		12	20	1			1200	1000			1	20	12	LCK	Z	PWR - ADA RR HAND DRYER	46
47	RCPT - COUNTERTOP R	R		12	20	1					1200	500	1	20	12		Z	PWR - RPS	48
49	RCPT - REFRIGERATOR	R	GF	12	20	1	800	50					1	20	12		Z	PWR - WSS	50
51	RCPT - WATER FILTER	R		12	20	1			1200	0			1	20				SPARE	52
53	RCPT - VENDING MACHINE	R	GF	12	20	1					800	0	1	20				SPARE	54
55	RCPT - PRINTER	R		12	20	1	180	0					1	20				SPARE	56
57	RCPT - ASM DESK COMP	R		12	20	1			1080	0			1	20				SPARE	58
59	RCPT - WATER COOLER	R	GF	12	20	1					180	0	1	20				SPARE	60
61	RCPT - RTU CONV	R		12	20	1	900	0					1	20				SPARE	62
63	RCPT - SALES GEN	R		12	20	1			720	0			1	20				SPARE	64
65	SPARE				20	1					0	0	1	20				SPARE	66
67	SPARE				20	1	0	0					1	20				SPARE	68
69	SPARE				20	1			0	0			1	20				SPARE	70
71	SPARE				20	1					0	0	1	20				SPARE	72
73	SPARE				20	1	0	0					1	20				SPARE	74
75	SPARE				20	1			0	0			1	20				SPARE	76
77	SPARE				20	1					0	0	1	20				SPARE	78
79							0	0					1	20				SPARE	80
81	KW METER				20	3			0	0			1	20				SPARE	82
83											0	0	1	20				SPARE	84
			TOTAL LOAD (VA):				10560 VA		12040 VA		10580 VA								
			TOTAL AMPS:				88 A		100 A		88 A								

LOAD TYPE	CONNECTED LOAD	DEMAND FACTOR	NEC DEMAND
EXISTING LOAD (E)	0 VA	100%	0 VA
COOLING (C)	0 VA	0%	0 VA
HEATING (H)	0 VA	100%	0 VA
LIGHTING (L)	0 VA	125%	0 VA
RECEPTACLES (R)	29420 VA	67%	19710 VA
MOTORS (M)	0 VA	100%	0 VA
SUPPLEMENTAL HEAT (U)	0 VA	100%	0 VA
MISC EQUIP (Z)	3760 VA	100%	3760 VA
REFRIGERATION (F)	0 VA	100%	0 VA
SIGN/DISPLAY (D)	0 VA	125%	0 VA
KITCHEN (K)	0 VA	100%	0 VA
LARGEST MOTOR	0 VA	125%	0 VA
SHOW WINDOW (W)	0 VA	125%	0 VA
TRACK LIGHTING	6900 VA	100%	6900 VA

PANELBOARD NOTES

PANELBOARD TOTALS	
TOTAL CONNECTED LOAD	40080 VA
TOTAL NEC LOAD	30370 VA
TOTAL CONNECTED CURRENT	111 A
TOTAL NEC DEMAND CURRENT	84 A

PANELBOARD: L2 (NEW)

EQUIPMENT GROUND BUS

BUS AMPS: 150A
MAIN SIZE/TYPE: 150A M.C.B.
VOLTS/PHASE: 208Y/120 V 3P/4W
SUPPLIED BY: MDP VIA TX-L

FAULT CURRENT: 4,274A
AIC RATED: FULLY RATED
AIC RATING: FCA +10% MINIMUM
SERVES: NIKE STORE
MOUNTING: SURFACE
LOCATION: IFS (STOCKROOM)

LINE-SIDE LUGS: MECHANICAL

CKT NO.	DESCRIPTION	LOAD TYPE	NOTES	WIRE SIZE	BKR AMP	P	PHASE A		PHASE B		PHASE C		P	BKR AMP	WIRE SIZE	NOTES	LOAD TYPE	DESCRIPTION	CKT NO.
1	LTG - SALES GEN W	L	Z1/DIM/EM	10	20	1	1560	900					1	20	12	Z3/PS	W	RCPT - W SHOW WINDOWS	2
3	LTG - SALES GEN MID	L	Z1/DIM/EM	12	20	1			1120	720			1	20	12	Z3/PS	W	RCPT - E SHOW WINDOWS	4
5	LTG - SALES GEN E	L	Z1/DIM/EM	10	20	1					1360	900	1	20	12	Z6/PS	R	RCPT - LOUNGE / HC PLGMLD	6
7	LTG - SALES GRID FRONT	L	Z4/PS	12	20	1	715	360					1	20	12	Z6/PS	R	RCPT - ASM PLGMLD L	8
9	LTG - SALES GRID MID	L	Z1/PS	12	20	1			416	360			1	20	12	Z6/PS	R	RCPT - ASM PLGMLD R	10
11	LTG - SALES GRID REAR E	L	Z1/PS	12	20	1					585	1200	1	20	10	Z7/PS	D	PWR - SIGNAGE	12
13	LTG - SALES GRID REAR W	L	Z1/PS	12	20	1	585	696					1	20	12	Z1/PS	M	PWR - EF-1	14
15	LTG - SALES TRK N	L	Z4/PS	12	20	1			2400	528			1	20	12	Z1/PS	M	PWR - EF-2	16
17	LTG - SALES TRK MID	L	Z4/PS	12	20	1					2400	248	1	20	12	Z1/PS	M	PWR - RP	18
19	LTG - SALES TRK E	L	Z4/PS	12	20	1	2400	0					1	20		PS	Z	SPARE	20
21	LTG - SALES TRK W	L	Z4/PS	12	20	1			2400	0			1	20		PS	Z	SPARE	22
23	LTG - CORRIDORS	L	Z1/DIM/EM	12	20	1					390	0	1	20		PS	Z	SPARE	24
25	LTG - FITTING ROOMS	L	EM	10	20	1	1350	0					1	20		PS	Z	SPARE	26
27	LTG - STOCKROOM	L	Z5/DIM/EM	12	20	1			676	0			1	20				SPARE	28
29	LTG - BACK OF HOUSE	L	Z1/DIM/EM	12	20	1					860	0	1	20				SPARE	30
31	SPARE				20	1	0	0					1	20				SPARE	32
33	SPARE				20	1			0	0			1	20				SPARE	34
35	SPARE				20	1					0	0	1	20				SPARE	36
37	SPARE				20	1	0	0					1	20				SPARE	38
39	SPARE				20	1			0	0			1	20				SPARE	40
41	SPARE				20	1					0	0	1	20				SPARE	42
			TOTAL LOAD (VA):				8566 VA		8620 VA		7943 VA								
			TOTAL AMPS:				72 A		73 A		66 A								

LOAD TYPE	CONNECTED LOAD	DEMAND FACTOR	NEC DEMAND
EXISTING LOAD (E)	0 VA	100%	0 VA
COOLING (C)	0 VA	0%	0 VA
HEATING (H)	0 VA	100%	0 VA
LIGHTING (L)	19217 VA	125%	24021 VA
RECEPTACLES (R)	1620 VA	100%	1620 VA
MOTORS (M)	776 VA	100%	776 VA
SUPPLEMENTAL HEAT (U)	0 VA	100%	0 VA
MISC EQUIP (Z)	0 VA	100%	0 VA
REFRIGERATION (F)	0 VA	100%	0 VA
SIGN/DISPLAY (D)	1200 VA	125%	1500 VA
KITCHEN (K)	0 VA	100%	0 VA
LARGEST MOTOR	696 VA	125%	870 VA
SHOW WINDOW (W)	0 VA	125%	0 VA
TRACK LIGHTING	6900 VA	100%	6900 VA

PANELBOARD NOTES

PANELBOARD TOTALS	
TOTAL CONNECTED LOAD	30409 VA
TOTAL NEC LOAD	35687 VA
TOTAL CONNECTED CURRENT	84 A
TOTAL NEC DEMAND CURRENT	99 A

Panel MDP	Panel L1
	Panel L2

DEAN W. CHANDLER

Architect:

brr

ARCHITECT OF RECORD:
BRR ARCHITECTURE, INC
8131 METCALF AVE
SUITE 300
OVERLAND PARK, KS 66204

www.brrarch.com

TEL: 913-262-9095
FAX: 913-262-9044

COPYRIGHT NOTICE

This drawing was prepared for use on a specific site contemporaneously with its issue date and it is not suitable for use on a different project site or at a later time. Use of this drawing for reuse on another project requires the services of properly licensed architects and engineers. Reproduction of this drawing for reuse on another project is not authorized and may be contrary to the law.

Engineer:

HENDERSON ENGINEERS
8345 LENEXA DRIVE, SUITE 300
LENEXA, KS 66214
TEL 913.742.5000 FAX 913.742.5001
WWW.HENDERSONENGINEERS.COM
2050003713
FL CORPORATE NO: EB 7806
EXPIRES 2/28/2021

Project Owner:

NIKE, Inc.
One Bowerman Drive
Beaverton, OR 97005
(503) 671-6453
www.nike.com

Project Address:

NIKE FACTORY STORE
WATERFORD LAKES SHOPPING CENTER
449 N. ALAFAYA TRAIL
ORLANDO, FL 32828
TEMPLATE ISSUE DATE: 11/26/2018

Fixture Package:

UNITE

Stamp:

THIS DOCUMENT IS RELEASED FOR THE PURPOSE OF PRELIMINARY SUBMITTAL
DEAN W. CHANDLER
LICENSE # 83831

IT IS NOT TO BE USED FOR CONSTRUCTION PURPOSES

DEAN W. CHANDLER
LICENSE # 83831

Issued For:

PERMIT/BID

Issue Date:

11/06/2020

Revisions:

NO.	REASON	DATE

PROJECT MANAGER:
KH
CHECKED BY:
DRAWN BY:
Author

Project Number:

62301411

Sheet Title:

ELECTRICAL PANELBOARD SCHEDULES

Sheet Number:

E3.1

LIGHTING CONTROL DEVICE SCHEDULE

LINE-VOLTAGE DIMMING WALL SWITCH

SYMBOL TAG	MANUFACTURER MODEL/SERIES	ALTERNATE MANUFACTURER	DEVICE DESCRIPTION	VOLTAGE	NOTES
DX#	LEVITON AWSMT-7DW	-	PRESET SLIDE DIMMER SWITCH FOR MANUAL ON/OFF AND DIMMING CONTROL. LOCATE DOWNSTREAM OF EMS CONTROL. LOAD: 120V=1920W, 277V=4432W	120/ 277	

LINE-VOLTAGE WALL SWITCH OCCUPANCY SENSORS

SYMBOL TAG	MANUFACTURER MODEL/SERIES	ALTERNATE MANUFACTURER	DEVICE DESCRIPTION	COVERAGE (W X D)	VOLTAGE	NOTES
OS	LEGRAND PW-100	ACUITY BRANDS, COOPER, HUBBELL, LEVITON LUTRON	WALL MOUNT PASSIVE INFRARED OCCUPANCY SENSOR. INTEGRAL MANUAL OVERRIDE SWITCH. SINGLE RELAY. LINE VOLTAGE. LOAD: 120V=800W, 277V=1200W.	MAJOR 30' x 35' MINOR 15' x 20'	120/ 277	

LINE-VOLTAGE DIMMING WALL SWITCH OCCUPANCY SENSORS

SYMBOL TAG	MANUFACTURER MODEL/SERIES	ALTERNATE MANUFACTURER	DEVICE DESCRIPTION	COVERAGE (W X D)	VOLTAGE	NOTES
OSD	LEGRAND PW-100D	N/A	WALL MOUNT PASSIVE INFRARED OCCUPANCY SENSOR. INTEGRAL MANUAL OVERRIDE SWITCH. SINGLE RELAY. LINE VOLTAGE. FORWARD PHASE DIMMING. LOAD: 120V=700W, 277V=1200W.	MAJOR 30' x 35' MINOR 15' x 20'	120/ 277	

NETWORK LIGHTING CONTROL SYSTEMS

NETWORK OCCUPANCY SENSORS

SYMBOL TAG	MANUFACTURER MODEL/SERIES	ALTERNATE MANUFACTURER	DEVICE DESCRIPTION	COVERAGE (W X D)	VOLTAGE	NOTES
A	LEGRAND LMDC-100	-	CEILING MOUNT DUAL TECHNOLOGY OCCUPANCY SENSOR. FURNISHED BY EMS VENDOR, INSTALLED BY CONTRACTOR.	PIR MAJOR 32' Ø PIR MINOR 15' Ø ULT MAJOR 25' x 25'	24	

NETWORK ROOM CONTROLLERS (POWER PACK)

SYMBOL TAG	MANUFACTURER MODEL/SERIES	ALTERNATE MANUFACTURER	DEVICE DESCRIPTION	VOLTAGE	NOTES
RD1	LEGRAND LMRC-211	-	DIGITAL ROOM CONTROLLER FOR ON/OFF/0-10V DIMMING CONTROL OF LIGHTING LOADS. FURNISHED BY EMS VENDOR, INSTALLED BY CONTRACTOR.	120/ 277	

NETWORK LIGHTING SWITCHES

SYMBOL TAG	MANUFACTURER MODEL/SERIES	ALTERNATE MANUFACTURER	DEVICE DESCRIPTION	VOLTAGE	NOTES
LV1	LEGRAND LMSW-100 SERIES	-	DIGITAL MULTI-BUTTON SWITCH FOR MANUAL ON/OFF AND SCENE CONTROL. FURNISHED BY EMS VENDOR, INSTALLED BY CONTRACTOR.	24	
LD1	LEGRAND LMDM-101	-	DIGITAL SWITCH FOR MANUAL ON/OFF/DIMMING CONTROL. FURNISHED BY EMS VENDOR, INSTALLED BY CONTRACTOR.	24	

AUXILIARY NETWORK LIGHTING EQUIPMENT

SYMBOL TAG	MANUFACTURER MODEL/SERIES	ALTERNATE MANUFACTURER	DEVICE DESCRIPTION	VOLTAGE	NOTES
B	LEGRAND LMBC-300	-	WIRED NETWORK BRIDGE TO CONNECT DLM ROOM CONTROLLERS TO BACNET NETWORK. FURNISHED BY EMS VENDOR, INSTALLED BY CONTRACTOR.	24	

GENERAL NOTES:

A. OCCUPANCY SENSOR LAYOUT DESIGNED FROM BASIS-OF-DESIGN COVERAGE PATTERNS. IF SUBMITTING ALTERNATE PER 'EQUIVALENT MANUFACTURER' COLUMN, ADJUST SENSOR QUANTITIES AND LOCATIONS PER MANUFACTURER-SPECIFIC SPACING CRITERIA.
B. PROVIDE SHOP DRAWINGS FOR ENGINEER AND ARCHITECT REVIEW THAT INCLUDE PRODUCT CUTSHEETS AND PROJECT-SPECIFIC LAYOUTS. LAYOUTS MUST INCLUDE SENSOR LOCATIONS, HEIGHTS, ORIENTATION, AND COVERAGE AREAS. SHOW COORDINATION WITH ALL OTHER CEILING DEVICES INCLUDING BUT NOT LIMITED TO HVAC SUPPLY AND RETURN GRILLES, SPRINKLERS, LIGHT FIXTURES, AND OTHER OWNER-PROVIDED CEILING MOUNTED DEVICES SUCH AS SPEAKERS, SECURITY CAMERAS, PROJECTORS, ETC. (SENSORS MAY BE ADVERSELY AFFECTED IF LOCATED TOO CLOSE TO OTHER CEILING MOUNTED DEVICES). ALSO PROVIDE SCHEMATICS AND SCHEDULES WHEN APPLICABLE.
C. LIGHTING CONTROLS PRICING SHALL BE COMPLETELY SEPARATE OF ANY LIGHT FIXTURE PRICING.
D. VERIFY COLOR(S) FOR ALL WALL AND CEILING MOUNTED DEVICES WITH THE ARCHITECT.
E. ALL WALL SWITCH AND CEILING SENSORS SHALL HAVE AN ADJUSTABLE TIME DELAY RANGE OF 0-30 MIN, UNO. CONFIRM SENSOR SETTINGS WITH SEQUENCE OF OPERATIONS AND OWNER PRIOR TO SYSTEM COMMISSIONING.
F. PROVIDE COPIES OF OPERATION AND MAINTENANCE INSTRUCTIONS FOR ALL DEVICES TO OWNER.
G. PROVIDE A NEUTRAL CONDUCTOR TO ALL WALL SWITCH LOCATIONS PER NEC REQUIREMENTS.
H. DO NOT SHARE NEUTRAL CONDUCTOR ON LOAD SIDE OF DIMMERS.

VERSION: 4

LIGHT FIXTURE SCHEDULE

TYPE	MANUFACTURER / MODEL #	LAMPING / LIGHT SOURCE	DIMMING TYPE	VOLTAGE	INPUT WATTS	INPUT VA	DESCRIPTION	NOTES
AL_	AMERLUX #PROD-A16-BAT80-ASW20-10-35-ST-120/277-X'-CON-0-10V-COMBO	LED	0-10V	120	10/FT	10/FT	PRODUCER COMBO CUSTOM RUNS - BAT80 LED PRODUCER 3500K 10W/FT. FACTORY WIRED INSTALLED PER RUN LENGTHS	
AL_M	AMERLUX #PROD-A16-BAT80-ASW20-10-35-ST-120/277-X'-CON-0-10V-COMBO	LED	0-10V	120	10/FT	10/FT	SAME AS AL_ EXCEPT WITH EMERGENCY BATTERY BACK-UP CAPABLE OF PRODUCING 1000 LUMENS FOR 90 MINUTES MINIMUM.	
AT	AMERLUX #PROD	TRACK	-	120	-	-	PRODUCER COMBO CUSTOM RUNS - CONTECH SINGLE CIRCUIT 120V TRACK. FACTORY WIRED INSTALLED PER RUN LENGTHS	
C	LF ILLUMIATION# TXA01-C-J-19C-9230-M-D1-1-SS	LED	-	120/277	19	19	LED TRACK HEAD 2300LUMEN 3000K SILVER INCLUDES SPOT & FLOOD OPTICS	
F4	BARTCO # BFL800-1S32-VII-SL-MF3	LED FLUOR. 13T8/48-3500	0-10V	120/277	13	13	GRID FIXTURE	1
K8	MERCURY # MM-132-OCT-C-8T-ELBD-ET8DRVR-UNI	LED FLUOR. 13T8/48-3500	0-10V	120/277	26	26	8'-0" STRIP FIXTURE. PROVIDE WITH ADVANCE T8 DRIVER FACTORY INSTALLED, INCLUDES WIREGUARD	1
K8EM	MERCURY # MM-132-OCT-C-8T-ELBD-ET8DRVR-UNI-B50	LED FLUOR. 13T8/48-3500	0-10V	120/277	26	26	SAME AS K8. EXCEPT WITH EMERGENCY BATTERY BACK-UP CAPABLE OF PROVIDING 500 LUMENS FOR 90 MINUTES MINIMUM.	1
L	CREE# LS4-40L-35K-10V	LED	0-10V	120/277	40	40	4'-0" LED SURFACE WRAP FIXTURE.	
LB	CONTECH LUXBEAM SYSTEM #LB122-X-S	TRACK	-	120	-	-	SINGLE CIRCUIT LUXBEAM SILVER - PROVIDE LENGTHS AS REQUIRED FOR CONTINUOUS RUN.COORDINATE WITH MANUFACTURER AND PROVIDE ALL ACCESSORIES REQUIRED FOR COMPLETE INSTALLATION.	
M	PHILIPS #2FGG42B835-4-D-UNV-DIM	LED	0-10V	120/277	35	35	RECESSED 2'x4' LED FIXTURE PROVIDE DRYWALL MOUNTING KIT WHERE REQUIRED.	
MEM	PHILIPS #2FGG42B835-4-D-UNV-DIM-EMLED	LED	0-10V	120/277	35	35	SAME AS M, EXCEPT WITH EMERGENCY BATTERY BACK-UP, 1100 LUMEN, 90 MINUTE MIN.	
R	INTENSE #SS6G3DR-L3-358-0-10V / IC630CSFW	LED	0-10V	120	19	21	RECESSED 6" LED DOWNLIGHT WITH REMOTE PHOSPHOR TECHNOLOGY, CLEAR OPEN REFLECTOR, SELF FLANGED WHITE TRIM. 1100 DELIVERED LUMENS MINIMUM. 3000K, 80+ CRI, 50,000 HOURS WITH INTEGRAL ELECTRONIC DRIVER.	
REM	INTENSE #SS6G3DR-L3-358-0-10VEM7 / IC630CSFW	LED	0-10V	120	19	21	SAME AS R, EXCEPT WITH EMERGENCY BATTERY BACK-UP CAPABLE OF PRODUCING 450 LUMENS FOR 90 MINUTES MINIMUM.	
RW	INTENSE #GD4WRL335-D101 IRW400C-SFW	LED	0-10V	120	34	34	WALL WASH 4" LED DOWNLIGHT WITH CLEAR OPEN REFLECTOR AND SELF FLANGED WHITE TRIM. 3500K, 80+ CRT, DIMMABLE.	
SM	CONTECH #TLT12V2	LED	0-10V	120	1.5/FT	1.5/FT	PROVIDE EACH MIRROR WITH 50W 0-10V DIMMING DRIVER. COORDINATE EXACT NUMBER OF DRIVERS WITH LIGHTING VENDOR, AND LOCATIONS AND ACCESSORIES WITH ARCHITECT PRIOR TO ORDERING.	
U	CONTECH #CTL182H35DS	LED	-	120/277	41	41	LED WALL WASH HEAD 4700LUMEN 3000K SILVER	
UC	MERCURY LIGHTING #LUC5-8-LED-24-120V	LED	-	120	20	24	UNDERCABINET 2'-0" TASK LIGHT LED FIXTURE WITH ROCKER SWITCH	
EM	EVENLITE #APR-25-L/C-UI-SD	LED	-	120/277	50	50	EMERGENCY CONCEALED LIGHT WITH EMERGENCY BATTERY BACK-UP CAPABLE OF PRODUCING 900 LUMENS FOR 90 MINUTES MINIMUM. W- WALL MOUNTED AT 8'-0" AFF	
X	LIGHTALARMS #QLXN500-R	LED	-	120/277	5	5	UNIVERSAL MOUNT EXIT SIGN WITH WHITE HOUSING AND RED LETTERS. EMERGENCY BATTERY BACK-UP CAPABLE OF POWERING FIXTURE FOR 90 MINUTES MINIMUM.	

GENERAL NOTES:

A. ALL FIXTURES PURCHASED AND FURNISHED BY OWNER. COORDINATE WITH OWNER CONSTRUCTION PROJECT MANAGER FOR ALL LIGHTING.
B. CONFIRM MOUNTING, FINISH, ACCESSORIES, LAMP COLOR TEMPERATURE, BEAM SPREAD, ETC. WITH ARCHITECT DRAWINGS FOR ALL LIGHT FIXTURES PRIOR TO ORDERING.
C. VERIFY CEILING CONDITIONS AND COORDINATE LIGHT FIXTURE MOUNTING HARDWARE AND TRIMS NEEDED TO SUIT CEILING CONDITIONS PRIOR TO ORDERING.
D. REFER TO ARCHITECTURAL DRAWINGS AND DETAILS FOR FINAL LOCATIONS, MOUNTING HEIGHTS, AND ADDITIONAL MOUNTING INFORMATION. CONTACT ARCHITECT IMMEDIATELY IF THERE ARE DISCREPANCIES BETWEEN THE ARCHITECTURAL AND ELECTRICAL LIGHTING PLANS.
E. REFER TO SPECIFICATIONS FOR ACCEPTABLE LAMP AND BALLAST MANUFACTURERS AND ADDITIONAL INFORMATION.
F. REFER TO PANELBOARD SCHEDULES, DETAILS ON THIS SHEET, AND EMS VENDOR DRAWINGS FOR CONTROL INFORMATION.
G. PROVIDE A MINIMUM OF 12 LAMPS OF EACH TYPE DESIGNATED AS SPARE FOR OWNER USE. LAMPS THAT BURN OUT DURING CONSTRUCTION PRIOR TO OPENING ARE THE RESPONSIBILITY OF THE CONTRACTOR TO REPLACE AND SHALL NOT COME OUT OF THE DESIGNATED SPARE LAMPS FOR OWNER USE.
H. COORDINATE WITH AMERLUX FOR EXACT FIXTURE MODEL NUMBERS. PROVIDE ALL PARTS, PIECES, ETC. REQUIRED FOR A COMPLETE AND FUNCTIONAL SYSTEM.

NOTES:
1. COORDINATE WITH LIGHTING VENDOR TO PROVIDE LED FLUORESCENT REPLACEMENT LAMPS.

LIGHTING ZONE CONTROL SCHEDULE

ZONE	DESCRIPTION
1	SALES ATHLETE
2	SALES CUSTOMER
3	INTERIOR SIGNAGE & SHOW WINDOW RECEPTACLES
4	SALES DISPLAY
5	STOCKROOM
6	OFFICE RECEPTACLES
7	EXTERIOR SIGNAGE

MULTI-BUTTON SWITCH SCHEDULE 'MS1'

BUTTON	BUTTON LABEL	RELAYS OR ZONES CONTROLLED
1	ZONE 1	SALES ATHLETE
2	ZONE 2	SALES CUSTOMER
3	ZONE 3	INT SIGNAGE & SHOW WINDOW REC
4	ZONE 4	SALES DISPLAY

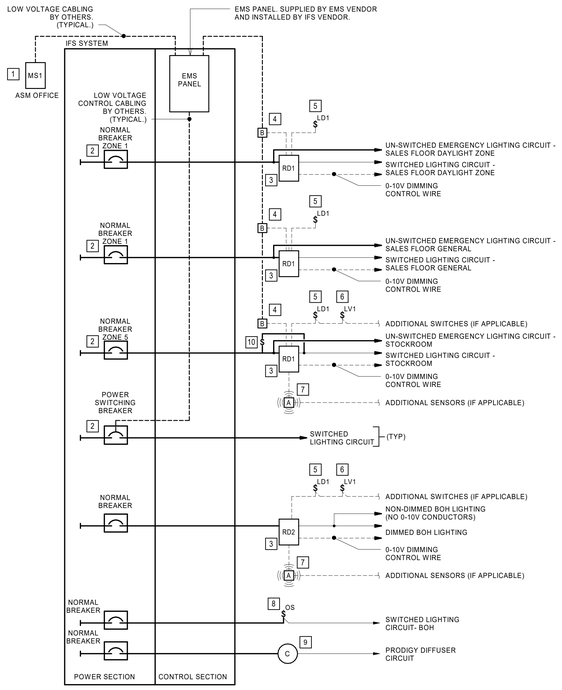

1 LIGHTING CONTROL IFS DIAGRAM
NTS

LIGHTING CONTROL SYSTEM GENERAL NOTES:

- ELECTRICAL CONTRACTOR TO PROVIDE CIRCUIT TERMINATION AT EITHER CIRCUIT BREAKER OR TERMINATION BLOCK. REFER TO PANELBOARD SCHEDULES FOR ADDITIONAL INFORMATION.
- MASTER LIGHTING CONTROLS SUPPLIED BY EMS VENDOR INSTALLED WITHIN IFS EQUIPMENT BY IFS MANUFACTURER. CONTROL WIRING AND ASSOCIATED TERMINATIONS INTEGRAL TO IFS EQUIPMENT BY OTHERS.
- E.C. SHALL INSTALL ALL FIELD COMPONENTS FURNISHED BY EMS VENDOR. E.C. SHALL PROVIDE ALL ASSOCIATED CONDUIT, WIRING AND TERMINATIONS. REFER TO EMS DRAWINGS FOR ADDITIONAL INFORMATION AND INSTALLATION REQUIREMENTS. COORDINATE ALL WORK WITH EMS VENDOR.
- LOCAL DIMMING AND OCCUPANCY SENSOR LIGHTING CONTROLS SUPPLIED BY LIGHTING VENDOR.
- E.C. SHALL INSTALL ALL COMPONENTS, CONDUIT, WIRING AND TERMINATIONS ASSOCIATED WITH LOCAL DIMMING AND OCCUPANCY SENSOR CONTROLS.

LIGHTING CONTROL DIAGRAM KEYNOTES:

1 MASTER LIGHTING OVERRIDE SWITCH PROVIDED BY EMS VENDOR. SWITCH SHALL CONTROL INDICATED ZONES. REFER TO MASTER CONTROL SWITCH SCHEDULE ON THIS SHEET AND EMS DRAWINGS FOR ADDITIONAL INFORMATION.

2 REFER TO PANELBOARD SCHEDULES FOR LIGHTING ZONE CONTROL INFORMATION.

3 0-10V DIMMING ROOM CONTROLLER, FURNISHED BY EMS VENDOR AND INSTALLED BY CONTRACTOR. REFER TO ELECTRICAL LIGHTING PLAN NOTE #9 AND DETAIL 1, SHEET E1.0, FOR ADDITIONAL INFORMATION.

4 LOW VOLTAGE NETWORK BRIDGE FOR CONNECTING ROOM CONTROLLER TO EMS PANEL, FURNISHED BY EMS VENDOR. CONTRACTOR TO INSTALL LOW VOLTAGE NETWORK BRIDGE AND PROVIDE CABLE BETWEEN BRIDGE AND ROOM CONTROLLER. CONTRACTOR TO PROVIDE CABLE FROM BRIDGE TO EMS PANEL. COORDINATE EXACT REQUIREMENT WITH EMS VENDOR PRIOR TO INSTALLATION.

5 LOW VOLTAGE DIMMING SWITCH FOR LOCAL LIGHTING CONTROL, FURNISHED BY EMS VENDOR AND INSTALLED BY CONTRACTOR. REFER TO DETAIL 1, SHEET E1.0, FOR ADDITIONAL INFORMATION. COORDINATE INSTALLATION REQUIREMENTS WITH EMS VENDOR PRIOR TO INSTALLATION.

6 LOW VOLTAGE SWITCH WHERE REQUIRED FOR MULTI-WAY SWITCHING, EMS FURNISHED AND CONTRACTOR INSTALLED. REFER TO DETAIL 1, SHEET E1.0, FOR LOCATIONS. COORDINATE EXACT REQUIREMENTS WITH EMS VENDOR PRIOR TO INSTALLATION.

7 LOW VOLTAGE OCCUPANCY SENSOR, FURNISHED BY EMS VENDOR AND INSTALLED BY CONTRACTOR. COORDINATE EXACT LOCATION AND INSTALLATION REQUIREMENTS WITH EMS VENDOR PRIOR TO INSTALLATION.

8 LINE VOLTAGE OCCUPANCY SWITCH FOR LIGHTING CONTROL, PROVIDED BY CONTRACTOR. REFER TO LIGHTING CONTROL DEVICE SCHEDULE ON THIS SHEET FOR ADDITIONAL INFORMATION.

9 PRODIGY DIFFUSER CONTROL POWER PACK. REFER TO LIGHTING CONTROL DEVICE SCHEDULE ON THIS SHEET FOR ADDITIONAL INFORMATION FOR ADDITIONAL INFORMATION.

10 ELECTRICAL MAINTENANCE OVERRIDE SWITCH. INSTALL SWITCH SO WHEN SWITCH IS IN THE ON POSITION LIGHTS ARE ON AND CANNOT BE TURNED OFF BY ROOM CONTROLLER.

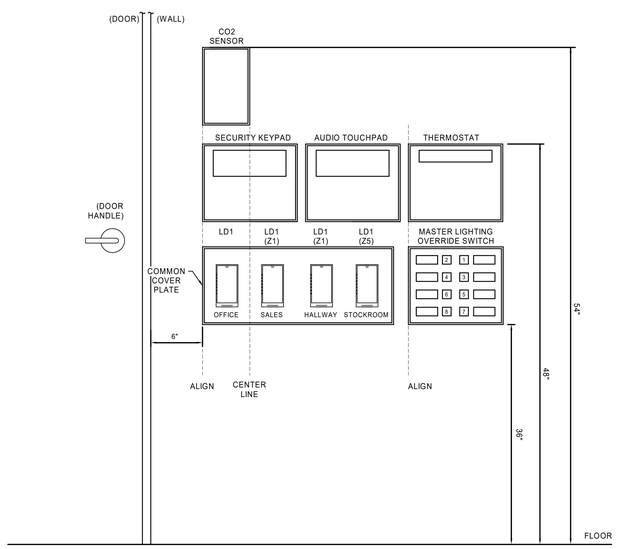

TYPICAL SWITCHBANK ELEVATION GENERAL NOTES:

1. ARRANGE SWITCHES AS INDICATED ABOVE TO CONDENCE WALL SPACE. MIRROR ARRANGEMENT OF CONTROLS IF DOOR HANDLE IS ON THE OPPOSITE SIDE OF DOOR.
2. COORDINATE EXACT NUMBER OF SWITCHES AND DEVICES WITH DRAWINGS. DETAIL FOR MOUNTING HEIGHT REFERENCE ONLY.
3. MASTER LIGHTING OVERRIDE SWITCH PROVIDED BY EMS VENDOR AND INSTALLED BY ELECTRICAL CONTRACTOR. REFER TO MASTER CONTROL SWITCH SCHEDULE ON THIS SHEET FOR BUTTON LAYOUT. PROVIDE DUAL-GANG JUNCTION BOX AND INSTALL AT HEIGHT INDICATED IN DETAIL. SWITCH SHALL HAVE INDIVIDUAL OVERRIDES FOR EACH ZONE AND FOR FITTING ROOM LIGHTING.
4. LOW VOLTAGE SWITCHES FOR LOCAL ROOM LIGHTING OVERRIDE. SWITCHES SHALL BE LOCATED DIRECTLY NEXT TO DOOR FRAME AS SHOWN. LOCATE UNDER COMMON COVERPLATE WHEN POSSIBLE. PROVIDE LABEL FOR EACH SWITCH AS INDICATED.

3 TYPICAL SWITCHBANK ELEVATION
NTS

Architect:

brr

ARCHITECT OF RECORD:
BRR ARCHITECTURE, INC
8131 METCALF AVE
SUITE 300
OVERLAND PARK, KS 66204

www.brrarch.com

TEL: 913-262-9095
FAX: 913-262-9044

COPYRIGHT NOTICE

This drawing was prepared for use on a specific site contemporaneously with its issue date and it is not suitable for use on a different project site or at a later time. Use of this drawing on another project or on another project requires the services of properly licensed architects and engineers. Reproduction of this drawing for reuse on another project is not authorized and may be contrary to the law.

Engineer:

HENDERSON ENGINEERS
8345 LENEXA DRIVE, SUITE 300
LENEXA, KS 66214
TEL 913.742.5000 FAX 913.742.5001
WWW.HENDERSONENGINEERS.COM
2050003713
FL. CORPORATE NO. EB 7806
EXPIRES 2/28/2021

Project Owner:

NIKE, Inc.
One Bowerman Drive
Beaverton, OR 97005
(503) 671-6453
www.nike.com

Project Address:

NIKE FACTORY STORE
WATERFORD LAKES SHOPPING CENTER
449 N. ALAFAYA TRAIL
ORLANDO, FL 32828
TEMPLATE ISSUE DATE: 11/26/2018

Fixture Package:

UNITE

Stamp:

THIS DOCUMENT IS RELEASED FOR THE PURPOSE OF PRELIMINARY SUBMITTAL
DEAN W. CHANDLER
LICENSE # 83831

IT IS NOT TO BE USED FOR CONSTRUCTION PURPOSES

DEAN W. CHANDLER
LICENSE # 83831

Issued For:

PERMIT/BID

Issue Date:

11/06/2020

Revisions:

NO.	REASON	DATE

PROJECT MANAGER: KH
CHECKED BY:
DRAWN BY: Author

Project Number:

62301411

Sheet Title:

ELECTRICAL LIGHTING DETAILS AND SCHEDULES

Sheet Number:

E3.2

DEAN W. CHANDLER

DATA CONDUIT FILL TABLE

TRADE SIZE	INTERNAL DIAMETER	TOTAL AREA	1 CABLE	2 CABLE	OVER 2 CABLES	REDUCTION FOR 90 DEGREE BENDS	NUMBER OF 4 PAIR CABLES ALLOWED		NUMBER OF NIKE STANDARD 4 CABLE STATIONS
(IN.)	(IN.)	(SQ. IN.)	53% FILL	31% FILL	40% FILL	(2 MAX)	(CAT 6)	WAPS ONLY (CAT 6A)	
3/4	0.824	0.533	0.282	0.165	0.213	0.154	5	6	1
1	1.049	0.864	0.458	0.268	0.346	0.25	8	10	2
1-1/4	1.38	1.496	0.793	0.464	0.598	0.432	14	17	4
1-1/2	1.61	2.036	1.079	0.631	0.814	0.588	19	24	6
2	2.067	3.356	1.779	1.04	1.342	0.97	31	39	10
2-1/2	2.731	5.858	3.105	1.816	2.343	1.693	54	68	17
3	3.356	8.846	4.688	2.742	3.538	0	-	147	36
4	4.334	14.753	7.819	4.573	5.901	0	-	245	61

NOTES:
1. CONDUIT SIZES BASED ON EMT CONDUIT.
2. CABLES BASED ON CAT6 AND CAT6A CABLES.

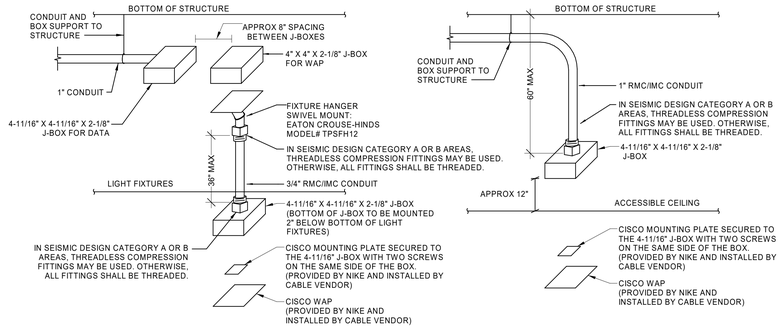

1 WAP MOUNTING DETAIL
NTS

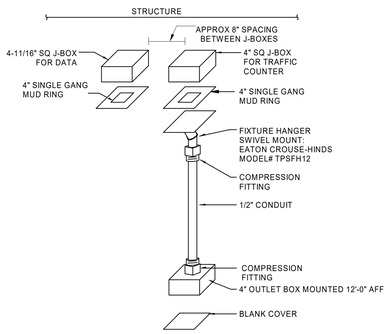

2 TRAFFIC COUNTER MOUNTING DETAIL
NTS

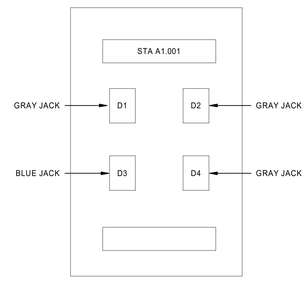

GENERAL NOTES:
1. THIS CONFIGURATION REQUIRES MINIMUM 1" CONDUIT FOR THREE DATA AND ONE VOICE CABLE HOMERUNS ROUTED TO THE TELEPHONE BACKBOARD. COORDINATE REQUIREMENTS WITH NIKE IT.
2. 4-11/16" SQUARE BOX WITH SINGLE GANG MUD RING FOR SINGLE GANG FACEPLATE.
3. CABLE NUMBERING SEQUENCE TO START WITH CASHWRAPS. CONFIRM FINAL NUMBERING SEQUENCE WITH NIKE IT PRIOR TO INSTALLATION.

3 RECEIVING DESK/TV DATA OUTLET CONFIGURATION
NTS

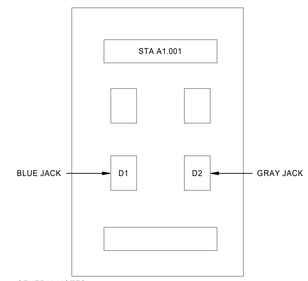

GENERAL NOTES:
1. THIS CONFIGURATION REQUIRES MINIMUM 1" CONDUIT FOR ONE DATA AND ONE VOICE CABLE HOMERUNS ROUTED TO THE TELEPHONE BACKBOARD. COORDINATE REQUIREMENTS WITH NIKE IT.
2. 4-11/16" SQUARE BOX WITH SINGLE GANG MUD RING FOR SINGLE GANG FACEPLATE.
3. CABLE NUMBERING SEQUENCE TO START WITH CASHWRAPS. CONFIRM FINAL NUMBERING SEQUENCE WITH NIKE IT PRIOR TO INSTALLATION.

4 DATA OUTLET CONFIGURATION
NTS

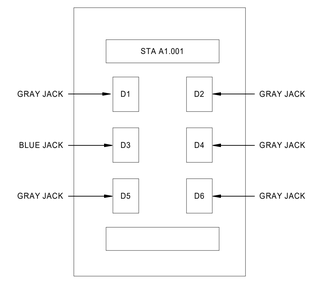

GENERAL NOTES:
1. THIS CONFIGURATION REQUIRES MINIMUM 1" CONDUIT FOR FIVE DATA AND ONE VOICE CABLE HOMERUNS ROUTED TO THE TELEPHONE BACKBOARD. COORDINATE REQUIREMENTS WITH NIKE IT.
2. 4-11/16" SQUARE BOX WITH SINGLE GANG MUD RING FOR SINGLE GANG FACEPLATE.
3. CABLE NUMBERING SEQUENCE TO START WITH CASHWRAPS. CONFIRM FINAL NUMBERING SEQUENCE WITH NIKE IT PRIOR TO INSTALLATION.

5 CASHWRAP DATA OUTLET CONFIGURATION
NTS

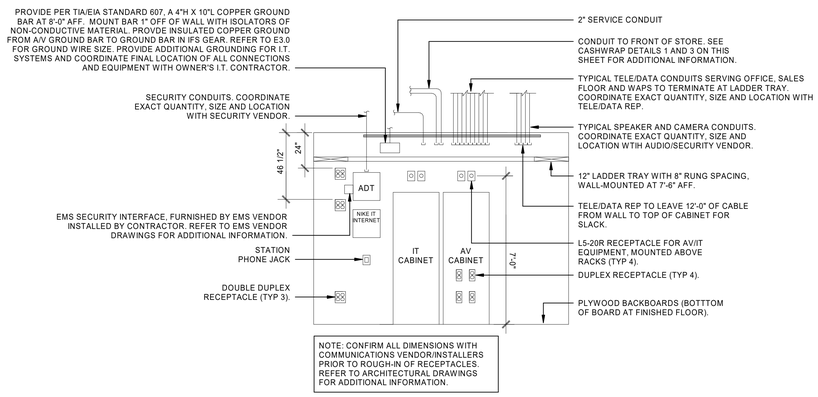

6 NIKE IT EQ ROOM
NTS

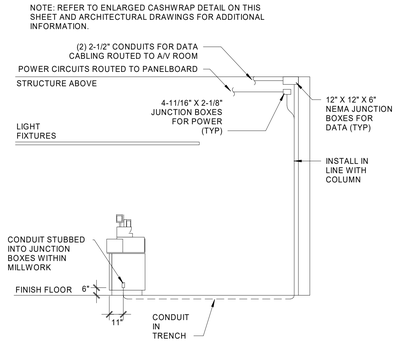

7 CASHWRAP ELEVATION
NTS

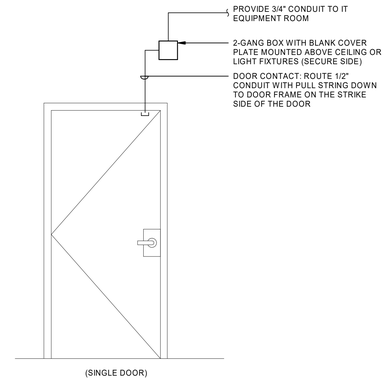

8 DOOR CONTACT DETAIL
12" = 1'-0"

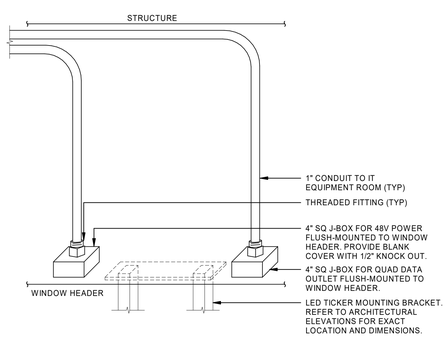

9 WINDOW LED TICKER POWER AND DATA DETAIL
12" = 1'-0"

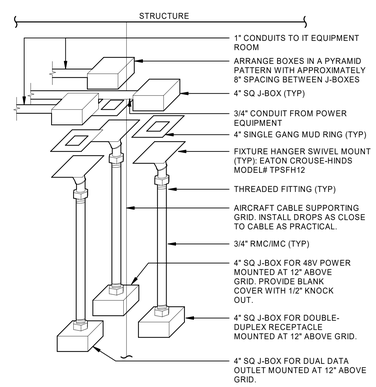

10 LED TICKER POWER AND DATA DETAIL
NTS

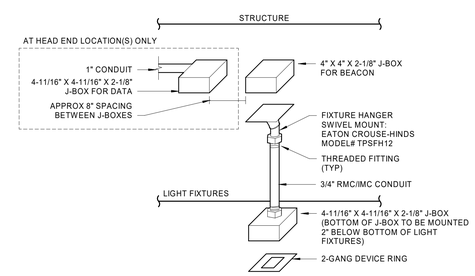

11 BEACON MOUNTING DETAIL
12" = 1'-0"

DEAN W. CHANDLER

Architect:

brr

ARCHITECT OF RECORD:
BRR ARCHITECTURE, INC
8131 METCALF AVE
SUITE 300
OVERLAND PARK, KS 66204
www.brrarch.com
TEL: 913-262-9595
FAX: 913-262-9044

COPYRIGHT NOTICE
This drawing was prepared for use on a specific site contemporaneously with its issue date and it is not suitable for use on a different project site or at a later time. Use of this drawing on another project or on another project requires the services of properly licensed architects and engineers. Reproduction of this drawing for reuse on another project is not authorized and may be contrary to the law.

Engineer:

HENDERSON ENGINEERS
8345 LENEXA DRIVE, SUITE 300
LENEXA, KS 66214
TEL 913.742.5000 FAX 913.742.5001
WWW.HENDERSONENGINEERS.COM
2050003713
FL CORPORATE NO. EB 7606
EXPIRES 2/28/2021

Project Owner:

NIKE, Inc.
One Bowerman Drive
Beaverton, OR 97005
(503) 671-6453
www.nike.com

Project Address:

NIKE FACTORY STORE
WATERFORD LAKES SHOPPING CENTER
449 N. ALAFAYA TRAIL
ORLANDO, FL 32828
TEMPLATE ISSUE DATE: 11/26/2018

Fixture Package:

UNITE

Stamp:

THIS DOCUMENT IS RELEASED FOR THE PURPOSE OF PRELIMINARY SUBMITTAL
DEAN W. CHANDLER
LICENSE # 83831

IT IS NOT TO BE USED FOR CONSTRUCTION PURPOSES

DEAN W. CHANDLER
LICENSE # 83831

Issued For:

PERMIT/BID

Issue Date:

11/06/2020

Revisions:

NO.	REASON	DATE

PROJECT MANAGER: KH
CHECKED BY:
DRAWN BY: Author

Project Number:

62301411

Sheet Title:

ELECTRICAL DETAILS

Sheet Number:

E3.3

Division 26A: GENERAL ELECTRICAL REQUIREMENTS

1. GENERAL INSTRUCTIONS

A. GENERAL REQUIREMENTS

All requirements under Division 01 and the general and supplementary conditions of these specifications apply to this section and division. Where the requirements of this section and division exceed those of Division 01, this section and division take precedence. Become thoroughly familiar with all its contents as to requirements that affect this division, section, or both. Work required under this division includes all material, equipment, appliances, transportation, services, and labor required to complete the entire system as required by the drawings and specifications, or reasonably inferred to be necessary to facilitate the function of each system as implied by the design and the equipment specified.

The specifications and drawings for the project are complementary, and any portion of work described in one shall be provided as if described in both. In the event of discrepancies, notify the Engineer and request clarification prior to proceeding with the Work involved.

Drawings are graphic representations of the work upon which the contract is based. They show the materials and their relationship to one another, including sizes, shapes, locations, and connections. They convey the scope of work, indicating the intended general arrangement of the systems without showing all of the exact details as to elevations, offsets, control lines, and other installation requirements. Use the drawings as a guide when laying out the work and to verify that materials and equipment will fit into the designated spaces, and which when installed per manufacturers' requirements, will ensure a complete, coordinated, satisfactory, and properly operating system.

B. DEFINITIONS

Division: References contained in this specification follow the numbering system defined in the Construction Specifications Institute (CSI) MasterFormat 2004 Edition. Specification Divisions 01 through 13 provided with this project may reference the CSI MasterFormat 1995 Edition. The corresponding division references between the 2004 Edition and 1995 Edition are as follows:

	2004 Edition	1995 Edition
1.	Division 21 – Fire Suppression	Division 15
2.	Division 22 – Plumbing	Division 15
3.	Division 23 – HVAC	Division 15
4.	Division 26 – Electrical	Division 16
5.	Division 27 – Communications	Division 16
6.	Division 28 – Electronic Safety and Security	Division 16

Furnish: "to supply and deliver to the project site, ready for unloading, unpacking, assembling, installing, and similar operations."

Install: "to perform all operations at the project site including, but not limited to, the actual unloading, unpacking, assembling, erecting, placing, anchoring, applying, working to dimension, finishing, curing, protecting, cleaning, testing, commissioning, starting up and similar operations, complete, and ready for the intended use."

Provide: "to furnish and install."

Furnished by Owner (or Owner-Furnished) or Furnished by Others: "an item furnished by the Owner or under other divisions or contracts, and installed under the requirements of this division, complete, and ready for the intended use, including all items and services incidental to the work necessary for proper installation and operation. Include the installation under the warranty required by this division.

Engineer: Where referenced in this Division, "Engineer" is the Engineer of Record and the Design Professional for the work under this division, and is a consultant to, and an authorized representative of the Architect, as defined in the General and/or Supplementary Conditions. When used in this division, Engineer means increased involvement by and obligations to the Engineer, in addition to involvement by and obligations to the Architect.

AHJ: The local code and/or inspection agency (Authority) Having Jurisdiction over the Work.

NRTL: Nationally Recognized Testing Laboratory, as defined and listed by OSHA in 29 CFR 1910.7 (e.g., UL, ETL, CSA), and acceptable to the AHJ over this project. Nationally recognized testing laboratories and standards listed are used only to represent the characteristics required and are not intended to restrict the use of other NRTLs that are acceptable to the AHJ and standards that meet the specified criteria.

Homerun: That portion of an electrical circuit originating at a junction box, termination box, receptacle, or switch with termination at an electrical panelboard. Note: Where MC cable is utilized for receptacle and/or lighting branch circuiting loads, the originating point of the homerun shall be at the first load in the circuit or at a junction box located in an accessible ceiling space as close as possible to the first load.

Substitution: Changes in products, materials, equipment, and methods of construction from those required by the Contract Documents and proposed by Contractor. Substitutions include Value Engineering proposals.

1. Substitutions for Cause: Changes proposed by Contractor that are required due to changed Project conditions, such as unavailability of product, regulatory changes, or unavailability of required warranty terms.
2. Substitutions for Convenience: Changes proposed by Contractor or Owner that are not required in order to meet other Project requirements but may offer advantage to Contractor or Owner.

The terms "approved equal", "equivalent", or "equal" are used synonymously and shall mean "accepted by or acceptable to the Engineer as equivalent to the item or manufacturer specified". The term "approved" shall mean labeled, listed, certified, or all three, by an NRTL, and acceptable to the AHJ over this project.

C. PRE-BID SITE VISIT

Prior to submitting bid, visit the site of the proposed work and become fully informed as to the conditions under which the work is to be done. Failure to comply with this requirement shall not be considered sufficient justification to request or obtain extra compensation over and above the contract price.

D. MATERIAL AND WORKMANSHIP

Provide new material, equipment, and apparatus under this contract unless otherwise stated herein, of best quality normally used for the purpose in good commercial practice, and free from defects. Model numbers listed in the specifications or shown on the drawings are not necessarily intended to designate the required trim, written descriptions of the trim govern model numbers.

Provide markings or a nameplate for all material and equipment identifying the manufacturer and providing sufficient reference to establish quality, size, and capacity. All workmanship shall be of the finest possible by experienced mechanics of the proper trade. In general, provide the following quality grade(s) for all materials and equipment.

Commercial specification grade:

Provide all hoists, scaffolds, staging, runways, tools, machinery, and equipment required for the performance of the electrical work. Store and maintain material and equipment in clean condition, and protected from weather, moisture, and physical damage.

Furnish only material and equipment that are listed, labeled, certified, or all three, by an NRTL whenever any listing or labeling exists for the types of material and equipment specified.

At a minimum, general work practices for electrical construction shall be in accordance with NECA 1 (latest edition), "Standard Practices for Good Workmanship in Electrical Construction".

E. MANUFACTURERS

In other articles where lists of manufacturers are introduced, subject to compliance with requirements, provide products by one of the manufacturers specified.

Where a list is provided, manufacturers are listed alphabetically and not in accordance with any ranking or preference.

Where manufacturers are not listed, provide products subject to compliance with requirements from manufacturers that have been actively involved in manufacturing the specified product for no less than 5 years.

F. COORDINATION

Coordinate all work with other divisions and trades so that various components of the systems are installed at the proper time, fit the available space, and allow proper service access to those items requiring maintenance. Components which are installed without regard to the above shall be relocated at no additional cost to the Owner.

Unless otherwise indicated, the General Contractor shall provide chases and openings in building construction required for installation of the systems specified herein. Contractor shall furnish the General Contractor with information where chases and openings are required. Contractor shall keep informed as to the work of other trades engaged in the construction of the project and shall execute work in a manner as to not interfere with or delay the work of other trades.

Figured dimensions shall be taken in preference to scale dimensions. Contractor shall take his own measurements at the building, as variations may occur. Contractor shall be held responsible for errors that could have been avoided by proper checking and inspection.

Provide materials with trim that will properly fit the types of ceiling, wall, or floor finishes actually installed. Model numbers listed in the specifications or shown on the drawings are not intended to designate the required trim.

Make all offsets required to clear equipment, beams, and other structural members, and to facilitate concealing raceways in the manner anticipated in the design. Provide materials with trim that will fit properly the types of ceiling, wall, or floor finishes actually installed.

G. ORDINANCES AND CODES

Work performed under this contract shall, at a minimum, be in conformance with applicable national, state and local codes having jurisdiction. Equipment furnished and associated installation work performed under this contract shall be in strict compliance with current applicable codes adopted by the local AHJ, including any amendments and standards as set forth by the following:

1. National Fire Protection Association (NFPA)
2. Underwriters Laboratories (UL)
3. Occupational Safety and Health Administration (OSHA)
4. American National Standards Institute (ANSI)
5. American Society of Testing Materials (ASTM)
6. Rules and regulations of public utilities and municipal departments affected by connection of services.
7. Other national standards and codes where applicable.

Where the contract documents exceed the requirements of the referenced codes, standards, etc., the contract documents shall take precedence. Where conflicts between various codes, ordinances, rules, and regulations exist, comply with the most stringent.

Promptly bring all conflicts observed between codes, ordinances, rules, regulations, referenced standards, and these documents to the attention of the Architect and Engineer for final resolution. Contractor will be held responsible for any violation of the law.

Procure and pay for permits and licenses required for the accomplishment of the work herein described. Where required, obtain, pay for, and furnish certificates of inspection to Owner. Provide all safety lights, guards, and warning signs required for the performance of the work and for the safety of the public.

H. PROTECTION OF EQUIPMENT AND MATERIALS

Store and protect from damage equipment and materials delivered to job site. For materials and equipment susceptible to changing weather conditions, dampness, or temperature variations, store inside in conditioned spaces. For materials and equipment not susceptible to these conditions, cover with waterproof, tear-resistant, heavy tarp or polyethylene plastic as required to protect from plaster, dirt, paint, water, or physical damage. Equipment and material damaged by construction activities shall be rejected, and Contractor shall furnish new equipment and material of a like kind at his own expense.

Keep premises broom clean of foreign material created during work performed under this contract. Conduit, equipment, etc. shall have a neat and clean appearance at the termination of the work.

Plug or cap open ends of conduits while stored and installed during construction when not in use to prevent the entrance of debris into the systems.

I. SUBSTITUTIONS

Materials, products, equipment, and systems described in the Bidding Documents establish a standard of required function, dimension, appearance and quality to be met by the proposed substitution. The base bid shall include only the products from manufacturers specifically named in the drawings and specifications. To request a substitution, request the Substitution Request Form from the Architect or Engineer. Complete and send the Substitution Request From for each material, product, equipment, or system that is proposed to be substituted. The burden of proof of the merit of the proposed substitution is upon the proposer.

Unless stated otherwise in writing to the Engineer by the Contractor, Contractor warrants to the Engineer, Architect, and Owner the following:

1. Proposed substitution has been fully investigated and determined to meet or exceed the specified Work in all respects unless stated otherwise in the substitution request.
2. Proposed substitution is consistent with the Contract Documents and will produce indicated results, including functional clearances, maintenance service, and sourcing of replacement parts.
3. Proposed substitution has received necessary approvals of authorities having jurisdiction.
4. Same warranty will be furnished for proposed substitution as for specified Work.
5. If accepted substitution fails to perform as required, Contractor shall replace substitute material or system with that originally specified and bear costs incurred thereby.
6. Coordination, installation and changes in the Work as necessary for accepted substitution will be complete in all respects.

No substitutions will be considered unless the Substitution Request Form is completed and attached with the appropriate substitution documentation. No substitution will be considered prior to receipt of bids unless written request for approval to bid has been received by the Engineer at least ten (10) calendar days prior to the date for receipt of bids.

If the proposed substitution is approved prior to receipt of bids, such approval will be stated in an addendum. Bidders shall not rely upon approvals made in any other way. Verbal approval will not be given. No substitutions will be considered after the contract is awarded unless specifically provided in the contract documents.

Provide factory generated point-by-point calculations for all exterior light fixtures (photometric files supplied so the engineer can generate a point-by-point do not suffice for the point-by-point calculations). Provide interior point-by-point calculations at the discretion of the engineer.

J. SUBMITTALS

Assemble and submit for review shop drawings, material lists, manufacturer product literature for equipment to be furnished, and items requiring coordination between contractors under this contract. Provide submittals in sufficient detail so as to demonstrate compliance with these Contract Documents and the design concept. Prior to transmitting submittals, verify that the equipment submitted is mutually compatible with and suitable for the intended use, will fit the available space, and maintain manufacturer recommended service clearances. If the size of equipment furnished makes necessary any change in location or configuration, submit a shop drawing showing the proposed layout.

Transmit submittals as early as required to support the project schedule. Allow two weeks for Engineer review time, plus to/from mailing time via the Architect, plus a duplication of this time for resubmittals, if required. Only resubmit those sections requested for resubmittal.

Submittals shall contain the project name, applicable specification section, submittal data, equipment identifications acronym as used on the drawings, and the Contractor's stamp. The stamp shall certify that the submittal has been checked by the Contractor, complies with the drawings and specifications, and is coordinated with other trades. Manufacturer product literature shall include shop drawings, product data, performance sheets, samples, and other submittals required by this division. Highlight, mark, list, or indicate the materials, performance criteria, and accessories that are being proposed. General product catalog data not specifically noted to be part of the specified product will be rejected and returned without review.

Submittals and shop drawings shall not contain firm name, logo, the seal, or signature of the Engineer. They shall not be copies of the work product of the Engineer. If the Contractor desires to use elements of such product, refer to paragraph "Electronic Drawing Files" for procedures to be used.

Separate submittals according to individual specification sections. Illegible submittals will be rejected and returned without review. Catalog data shall be properly bound, identified, indexed and tabbed in a 3-ring binder. Each item or model number shall be clearly marked and accessories indicated. Label the catalog data with the equipment identification acronym or number as used on the drawings and include performance curves, capacities, sizes, weights, materials, finishes, wiring diagrams, electrical requirements and deviations from specified equipment or materials. Mark out inapplicable items. Shop drawings will be returned without review if the above mentioned requirements are not met.
Provide the quantity of submittals required by Division 01. If not indicated and hard-copy sets are provided, submit a minimum of six (6) copies. Refer to Division 01 for acceptance of electronic submittals for this project. For electronic submittals, Contractor shall submit the documents in accordance with the procedures specified in Division 01. Contractor shall notify the Architect and Engineer that the submittals have been posted. If electronic submittal procedures are not defined in Division 01, Contractor shall include the website, user name, and password information needed to access the submittals. For submittals sent by e-mail, Contractor shall copy the designated representatives of the Architect and Engineer. Contractor shall allow for the Engineer review time as specified above in the construction schedule. Contractor shall submit only the documents required to purchase the materials and/or equipment in the submittal.

The checking and subsequent acceptance of submittals by the Engineer and/or Architect shall not relieve the Contractor from responsibility for deviations from the drawings and specifications, errors in dimensions, details, sizes of equipment, or quantities, omissions of components or fittings, coordination of electrical requirements, and not coordinating items with actual building conditions and adjacent work. Contractor shall request and secure written acceptance from the Engineer and Architect prior to implementing any deviation.

K. ELECTRONIC DRAWING FILES

In preparation of shop drawings or record drawings, Contractor may, at his option, obtain electronic drawing files in AutoCAD or DXF format on CD-ROM disk, DVD disk, flash drive, or direct download, as desired, from the Engineer for a shipping and handling fee of $200 for a drawing set up to 12 sheets and $15 per sheet for each additional sheet. Contact the Architect for written authorization and Engineer for the necessary agreement form and to specify shipping method and drawing format. In addition to payment, the written authorization from the Architect and release agreement form from the Engineer must be received before electronic drawing files will be sent.

L. RECORD DRAWINGS (AS-BUILT DRAWINGS)

During progress of the work in this division, Contractor shall maintain an accurate record of all changes made during the installation of the system. Upon completion of the work, accurately transfer all record information to three identical sets of the approved shop drawings. Insert one set into each copy of the manual described below.

See Division 01 and General Conditions for additional information.

M. OPERATION AND MAINTENANCE INSTRUCTIONS

During the course of construction, collect and compile a complete brochure of equipment furnished and installed on this project. Include operational and maintenance instructions, manufacturer's catalog sheets, wiring diagrams, parts lists, approved submittals and shop drawings, warranties, and descriptive literature as furnished by the equipment manufacturer. Include an inside cover sheet that lists the project name, date, Owner, Architect, Engineer, General Contractor, Sub-Contractor, and an index of contents.

Submit three copies of literature bound in approved binders with index and tabs separating equipment types to the Architect, for Engineer's review, at the termination of the work. Paper clips, staples, rubber bands, loose-leaf binding, and mailing envelopes are not considered approved binders. Final approval of systems installed under this contract shall be withheld until this equipment brochure is received and deemed complete by the Architect and Engineer. Instruct workmen to save required literature shipped with the equipment itself for inclusion in this brochure.

Include Record Drawings as described above.

Refer to Division 01 for acceptance of electronic manuals for this project. For electronic manuals, refer to paragraph "Submittals" for requirements.

N. WARRANTIES

Warrant each system and each element thereof against all defects due to faulty workmanship, design, or material for a period of 12 months from date of Substantial Completion, unless specific items are noted to carry a longer warranty in these construction documents or manufacturer's standard warranty exceeds 12 months. Remedy all defects occurring within the warranty period(s) as stated in the General Conditions and Division 01.

Warranties shall include labor and material, including travel expenses. Make repairs or replacements without any additional costs to the Owner, and to the satisfaction of the Owner, Architect, and Engineer.

Perform the remedial work promptly, upon written notice from the Engineer or Owner.

Also warrant the following additional items:

1. All raceways are free from obstructions, holes, crushing, or breaks of any nature.
2. All raceway seals are effective.
3. The entire electrical system is free from all short circuits and unwanted open circuits and grounds.

At the time of Substantial Completion, deliver to the Owner all warranties, in writing and properly executed, including term limits for warranties extending beyond the one year period and any actions the Owner must take in order to maintain warranty status. Each warranty instrument shall be addressed to the Owner and state the commencement date and term.

2. GENERAL MATERIALS AND INSTALLATION

A. BUILDING OPERATION

Comply with the schedule of operations as outlined in the architectural portions of this specification. Building shall be in operation during normal workday hours. Accomplish work requiring interruption of building operation at a time when the building is not in operation and only with written approval of building Owner and/or tenant. Coordinate interruption of building operation with the Owner and/or tenant a minimum of seven (7) days in advance of work.

B. EXISTING EQUIPMENT REUSE AND REMOVAL

Provide all demolition of existing electrical systems and new electrical system modifications required because of building remodeling, as noted on the Drawings, or necessary for proper operation and new construction. Remove all abandoned cables and wiring and conduit above accessible ceilings and ventilation shafts.

Remove all existing wiring, light fixtures, exposed conduits, and other electrical installations not reused prior to substantial completion of the work.

Existing raceways may be reused if their points of terminations are suitable; if they are clean inside with no evidence of rust or burrs; if free from cracks, flattened sections, or sharp bends; and, if suitably located to avoid conflicts with other trades or installations. Carefully "fish" all existing conduits reused under this contract to remove all debris and obstructions, and swab until all moisture is removed.

Cut, patch, and repair where required for new electrical installations, and patch and repair all surface damage resulting from this work. Cut flush with the floor and plug at both ends raceways stubbed above the floor and not used at substantial completion of the work.

Relocate all existing electrical systems required to be in operation at substantial completion of the contract, if required, as a result of work included under this contract, even if not specifically indicated in the drawings or specifications.

Existing service entrance conductors and feeder conductors may be reused if all of the following conditions are met:

1. Conductor sizes meet or exceed the sizes specified on the drawings.
2. Conductor insulation is in good or better condition.
3. Conductor insulation is the correct type for the conditions.

C. COINCIDENTAL DAMAGE

Repair streets, sidewalks, drives, paving, walls, finishes, and other facilities damaged in the course of this Work. Repair materials shall match existing construction. Repair work shall meet all requirements of the Owner, local authorities having jurisdiction, and meet the satisfaction of the Architect. Repair work shall be thoroughly first class.

D. CUTTING AND PATCHING

Conform to the requirements in Division 01. Cut walls, floors, ceilings, and other portions of the facility as required to install work under this division. Obtain permission of the Architect prior to cutting. Do not cut or disturb structural members without prior approval from the Architect. Cut holes as small as possible. Patch walls, floors, and other portions of the facility as required by work under this division. Patching shall match the original material and construction including fire ratings, if applicable. Repair and refinish areas disturbed by work to the condition of adjoining surfaces in a manner satisfactory to the Architect.

E. ROUGH-IN

Coordinate without delay all roughing-in with other divisions. Conceal all conduit and raceways except in unfinished areas and where otherwise indicated on the drawings.

F. SUPPORT SYSTEMS

Steel Slotted Support Systems (Slotted Channel): Comply with MFMA-3, factory-fabricated components for field assembly; 12-gauge, 1-5/8-inch by 1-5/8-inch.

Finishes: Metallic Coatings: Hot-dip galvanized after fabrication and applied according to MFMA-3.

Aluminum Slotted Support Systems (Slotted Channel): Comply with MFMA-3, Type 6063-T6, per ASTM B221; factory-fabricated components for field assembly; 12-gauge, 1-5/8-inch by 1-5/8-inch.

Manufacturers: Cooper B-Line, ERICO International, Hilti, Power-Strut, Thomas and Betts, or Unistrut.

Field Fabrication:

Where field cutting of standard lengths of channel are required, make cuts straight and perpendicular to manufactured surfaces.

For field-cut or damaged surfaces of coated channels, dress cut ends, damaged surfaces, or both, with an abrasive material (e.g., file, grinding stone, or similar) and cleanser to remove oils, rust, sharp edges, and shards.

For channel with a factory-applied coating, re-finish cut edges with a coating compatible with the factory finish and as recommended by the manufacturer (e.g., manufacturer's touch-up paint or zinc-rich cold-galvanizing compound, as applicable).

G. ACCESS DOORS

Provide access doors for all concealed equipment where indicated or as required, except where above lay-in ceilings. Access doors shall be adequately sized for the devices served with a minimum size of 18 inches x 18 inches. Access doors must be of the proper construction for the type of construction in which it is installed. Obtain Architect's approval of type, size, location and color before ordering. Provide factory-fabricated and assembled units, complete with attachment devices and fasteners ready for installation, concealed hinges, flush screwdriver-operated cam lock, and anchor straps. Provide access doors manufactured by: Bar-Co, J.L. Industries, Karp Associates, Milcor, Nystrom Building Products, Wade, or Zum.

H. PENETRATIONS

Coordinate sleeve selection and application with selection and application of fire-stopping specified in Division 07 section "Through-Penetration Firestop Systems."

Walls and Floors:
1. Steel Pipe Sleeves for Raceways and Cables: ASTM A53/A53M, Type E, Grade B, Schedule 40, galvanized steel, plain ends, and drip rings.

2. Cast-Iron Pipe Sleeves for Raceways and Cables: Cast or fabricated "wall pipe," equivalent to ductile-iron pressure pipe, with plain ends and integral waterstop, unless otherwise indicated.

3. Sleeves for Rectangular Openings: Galvanized sheet steel with minimum 0.052 inch thickness and of length to suit application.

I. FIRESTOPPING

Sealants and accessories shall have fire-resistance ratings indicated, as established by testing identical assemblies in accordance with UL 2079 or ASTM E 814, or other NRTL acceptable to AHJ.

Manufacturers: Hilti, RectorSeal, Specified Technologies Inc., United States Gypsum Company, or 3M corp.

Through and Membrane Penetration Firestopping Systems Product Schedule: Provide UL listing, location, wall or floor rating, and installation drawing for each penetration fire stop system.

Where project conditions require modification to qualified testing and inspecting agency's illustrations for a particular firestopping condition, submit illustration, with modifications marked, approved by penetration firestopping manufacturer's fire-protection engineer as an engineering judgment or equivalent fire-resistance-rated assembly. Include qualifications data for testing agency.

J. EQUIPMENT FURNISHED BY OTHERS

Provide necessary equipment and accessories that are not provided by the equipment supplier or Owner to complete installation of equipment furnished by others in locations as indicated on the drawings, specified herein, or both. Equipment and accessories not provided by the equipment supplier may include, but not be limited to, flexible cords and plugs as required for proper operation of the complete system, in accordance with the manufacturers' instructions.

Contractor shall be responsible for correct rough-in dimensions, and verify them with Architect and/or equipment supplier prior to rough-in and service installations.

K. SYSTEM TESTING AND ADJUSTING

Adjust, align, and test all electrical equipment on this project provided under this division and all electrical equipment furnished by others for installation or wiring under this division for proper operation.

Test all systems and equipment according to the requirements in NETA ATS (latest edition) and all additional requirements specified in following sections.

Maintain the following on the project premises at all times: a true RMS reading voltmeter, a true RMS reading ammeter, and a megohmmeter insulation resistance tester. Provide test data readings as requested or as required by the Engineer.

B. EQUIPMENT IDENTIFICATION

Provide equipment identification nameplates on all switchboards, panelboards, electrical equipment enclosures, access doors, transformers, disconnect switches, enclosed circuit breakers, motor starters, feeder devices in switchboards, distribution panelboards, and motor control centers.

Nameplates: Engraved, contrasting color, three-layer, laminated plastic, indicating the name of the equipment, load, or circuit as designated on the drawings and in the specifications.

Attachment method shall be acceptable to the manufacturers of the equipment to which the nameplates are being applied.

Nameplate Color:
1. Black background with white letters for Normal Power;
2. Red background with white letters for Emergency Power.
Letter height: 3/8-inch minimum.

B. SYSTEM START UP

Perform the following prior to starting up the electrical systems:

1. Check all components and devices and lubricate items accordingly.
2. Tighten screws and bolts for connectors and terminals according to manufacturer's published torque-tightening values. If manufacturer's torque values are not indicated, use those specified in UL 486A and UL 486B.
3. Adjust taps on each transformer for rated secondary voltage when the transformer is at minimum load.
4. Check and record building's service entrance voltage, grounding conditions, grounding resistance, and proper phasing.
5. Replace all burned-out lamps and lamps used for temporary construction lighting in permanent light fixtures.
6. After all systems have been inspected and adjusted, confirm all operating features required by the drawings and specifications and make final adjustments as necessary.

END OF SECTION 26A

DEAN W. CHANDLER

Architect:

brr

ARCHITECT OF RECORD:
BRR ARCHITECTURE, INC
8131 METCALF AVE
SUITE 300
OVERLAND PARK, KS 66204

www.brrarch.com

TEL 913-262-9095
FAX: 913-262-9044

COPYRIGHT NOTICE

This drawing was prepared for use on a specific site contemporaneously with its issue date and it is not suitable for use on a different project site or at a later time. Use of instruments of service prepared on another project requires the services of properly licensed architects and engineers. Reproduction of this drawing for reuse on another project is not authorized and may be contrary to the law.

Engineer:

HENDERSON ENGINEERS
8345 LENEXA DRIVE, SUITE 300
LENEXA, KS 66214
TEL 913.742.5000 FAX 913.742.5001
WWW.HENDERSONENGINEERS.COM
2050003713
FL CORPORATE NO: EB 7606
EXPIRES 2/28/2021

Project Owner:

NIKE, Inc.
One Bowerman Drive
Beaverton, OR 97005
(503) 671-6453
www.nike.com

Project Address:

NIKE FACTORY STORE
WATERFORD LAKES SHOPPING CENTER
449 N. ALAFAYA TRAIL
ORLANDO, FL 32828
TEMPLATE ISSUE DATE: 11/26/2018

Fixture Package:

UNITE

Stamp:

THIS DOCUMENT IS RELEASED FOR THE PURPOSE OF PRELIMINARY SUBMITTAL
DEAN W. CHANDLER
LICENSE # 83831

IT IS NOT TO BE USED FOR CONSTRUCTION PURPOSES

DEAN W. CHANDLER
LICENSE # 83831

Issued For:

PERMIT/BID

Issue Date:

11/06/2020

Revisions:

NO.	REASON	DATE

PROJECT MANAGER:
KH

CHECKED BY:

DRAWN BY:
Author

Project Number:

62301411

Sheet Title:

ELECTRICAL SPECIFICATIONS

Sheet Number:

E4.0

Division 26B: BASIC ELECTRICAL MATERIALS AND METHODS

1. RACEWAYS

A. METALLIC CONDUIT AND TUBING

Electrical Metallic Tubing, Couplings, and Fittings (EMT): ANSI C80.3, UL 797. Only steel products allowed. Reduced wall EMT is not allowed.

Flexible Metal Conduit (FMC): Zinc-coated steel or aluminum, UL 1. Reduced-wall FMC is not allowed.

Intermediate Metal Conduit (IMC): Hot-dip Galvanized Rigid Steel Conduit, ANSI C80.6, UL 1242.

Liquidtight Flexible Metal Conduit (LFMC): Flexible steel conduit with PVC jacket, UL 360; fittings: NEMA FB 1.

Rigid Metal Conduit (RMC): Hot-dip Galvanized Rigid Steel Conduit (GRS): ANSI C80.1, UL 6.

Plastic-Coated IMC, RMC, and Fittings: NEMA RN 1, NRTL listed. Coating thickness of 0.04 inches minimum.

IMC and RMC Fittings: NEMA FB 1; compatible with conduit type and material, NRTL listed.

Manufacturers: AFC Cable, Alflex, Anamet Electrical, Electri-Flex, Indalex, Manhattan/CDT/Cole-Flex, O-Z/Gedney, Republic Raceway, Tyco International, Western Tube and Conduit, or Wheatland Tube.

B. NON-METALLIC CONDUIT AND TUBING

Rigid Nonmetallic Conduit (RNC): Schedule 40 PVC, 90 deg C rated, NEMA TC-2, UL 651

Fittings: NEMA TC 3, TC 6; UL 651, compatible with conduit/tubing type and material, NRTL listed.

Manufacturers: AFC Cable, American International, Anamet Electrical, Amco, Cantex, Certainteed, Condux International, Elecsys, Electri-Flex, Lamson and Sessions, Manhattan/CDT/Cole-Flex, Prime Conduit, Raco, Spiralduct, Superflex Ltd, or Thomas and Betts.

2. RACEWAY INSTALLATION

A. GENERAL RACEWAY INSTALLATION REQUIREMENTS

Install raceways parallel and perpendicular to building lines.

Install raceways to requirements of structure, to requirements of all other work on the project, and to clear all openings, depressions, pipes, ducts, reinforcing steel, and other immovable obstacles.

Install raceways continuous between connections to outlets, boxes, and cabinets with a minimum possible number of bends and not more than the equivalent of four 90-degree bends between connections. Use manufactured elbows for all 45- and 90-degree bends, unless approved by the Engineer in advance. Make other bends smooth and even and without flattening raceway or flaking galvanizing or enamel. Radii of bends shall be as long as possible and never shorter than the corresponding trade elbow.

Securely fasten raceways in place with approved straps, hangers, and steel supports as required. Attach raceway supports to the building structure. Hang single raceways for feeders with malleable split ring hangers with rod and turnbuckle suspension from inserts spaced not over 10 feet apart in construction above. Clamp groups of horizontal feeder raceways to steel channels that are suspended from inserts spaced not over 10 feet apart in construction above. Securely clamp vertical feeder raceways to structural steel members attached to structure. Install cable clamps for support of vertical feeders where required. Add raceway supports within 12 inches of all bends, on both sides of the bends. Do not support raceways from suspended ceiling components.

Ream raceway ends, thoroughly clean raceways before installation, and keep clean after installation. Plug or cover openings and boxes as required to keep raceways clean during construction and fish all raceways clear of obstructions before pulling conductor wires. Provide raceways of ample size for pulling of wire, not smaller than code requirements and not less than 1/2-inch in size, unless indicated otherwise on Drawings. Homeruns containing more than one branch circuit shall not be less than 3/4-inch in size.

Protect all raceway installations against damage during construction. Repair all raceways damaged or moved out of line after roughing-in to meet Engineer's approval without additional cost to the Owner.

Align and install true and plumb all raceway terminations at panelboards, switchboards, motor control equipment, and junction boxes.

Install approved expansion/deflection fittings where raceways pass through (if embedded) or across (if exposed) expansion joints, and when using RNC or RAC in exposed environments in accordance with NFPA 70 and expansion/contraction properties of RNC or RAC.

Install a pull wire in each empty raceway that is left for installation of conductors or cables under other divisions or contracts. Use polypropylene or monofilament plastic line with not less than 200-lb tensile strength. Leave at least 24 inches of slack at each end of pull wire.

Make all joints and connections in a manner that will ensure mechanical strength and electrical continuity.

B. ABOVE GROUND RACEWAY USE:

Install all circular raceways concealed above suspended ceilings or concealed in walls or floors wherever possible except where otherwise indicated. Provide GRS for all conduits exposed to weather or other hazardous conditions.

Unless noted otherwise, all other raceway may be EMT where approved by local code. Use compression type fittings for EMT, with all fittings NRTL listed for the environment in which they are used. Unless noted otherwise, set-screw type fittings are not allowed.

C. EQUIPMENT CONNECTIONS

Use FMC for final connection to each motor, transformer, and any device that would otherwise transmit motion, vibration, or noise. Use LFMC where exposed to liquids, vapors, or sunlight. Provide all FMC and LFMC with an insulated bonding conductor.

Use only metal raceways for all power wiring from the output of variable frequency drives to their respective motors.

3. BUSHINGS AND LOCKNUTS

Rigidly terminate conduits entering sheet metal enclosures to the enclosure with a bushing and locknut on the inside and a locknut or an approved hub on the outside. Conduit shall enter the enclosure squarely.

Provide bushings and locknuts made of galvanized malleable iron with sharp, clean-cut threads.

Where EMT enters a box, provide approved EMT compression connectors.

Use insulated, grounding, or combination bushings wherever connection is subject to vibration or moisture, when required by NFPA 70, or both.

4. CONDUCTORS AND CABLES

Annealed (soft) copper complying with ICEA S-95-658/NEMA WC70 and UL standards 44 or 83 as applicable.

Conductor Insulation Types: 90-degree C-rated, Type THHN/THWN-2 or XHHW-2 complying with ICEA S-95-658/NEMA WC70.

Sizes of conductors and cables indicated or specified are in American Wire Gage (AWG - Brown and Sharpe).

All feeder and branch circuit conductors No. 8 AWG and larger: Stranded.

All conductors, No. 10 AWG and smaller: Solid copper.

All Branch Circuit Wiring: Not smaller than No. 12 AWG. If no conductor size is indicated on the Drawings for a branch circuit, provide conductors and conduit sized per NFPA 70 and based on the indicated branch circuit overcurrent protective device (OCPD) rating and number of poles. Where no circuit size (i.e., conductors and OCPD) is indicated on the drawings for a branch circuit, provide three No. 12 AWG conductors, in 3/4-inch raceway, and a 20A circuit breaker.

Control Wiring: Stranded copper conductors, 600V insulation, of the proper type, size, and number as required to accomplish specified function. Minimum size: No. 14 AWG, unless noted otherwise.

Flexible Cords and Cables: Stranded copper conductors for all, unless noted otherwise.

Special Purpose Conductors And Cables, Such As Low Voltage Control And Shielded Instrument Wiring: As recommended by the system equipment manufacturer unless indicated otherwise.

Copper Conductor Manufacturers: Advance Wire and Cable, AFC Cable, Alan Wire, Alflex, American Insulated Wire, Encore Wire, Northern Cables, Okonite, or Southwire.

Connections: Apply a zinc based anti-oxidizing compound to connections. Do not use terminals on wiring devices to feed through to the next device.

5. CONDUCTORS AND CABLES INSTALLATION

Install all wiring in approved raceway and enclosures, except
where specified or indicated for low-voltage wiring, where specified or indicated for direct-buried cables, or where type MC cable is indicated or specified as acceptable.

Install all conductors and cables in raceways continuous without taps or splices. Splice or tap only in approved boxes and enclosures with approved solderless connectors, or crimp connectors and terminal blocks for control wiring, and keep to the minimum required. Insulate all splices, taps, and joints as required by codes.

All materials used to terminate, splice, or tap conductors: designed for, properly sized for, and NRTL listed for the specific application and conductors involved, and installed in strict accordance with the manufacturer's recommendations, using the manufacturer's recommended tools.

Where wiring is indicated as installed, but the connection is indicated "FUTURE" or "BY OTHER DIVISION, TRADES, OR CONTRACTS", leave a minimum 3-foot "Pigtail" at the box, tape the ends of the conductors, and cover the box.

In general, the direction of branch circuit "home run" routing is indicated on the drawings, complete with circuit numbers and panelboard designation. Continue all such "home run" wiring to the designated panelboard, as though "circuit runs" were indicated in their entirety.

Common or shared neutrals are not allowed unless shown on the drawings to be used or specifically noted to be allowed.

Where multi-wire branch circuits (i.e., shared neutral) are allowed, they shall be provided with a means that will simultaneously disconnect all ungrounded conductors at the point the branch circuit originates. Multi-pole breakers or 3 single-pole breakers with a handle tie are two examples.

When multiple home runs are combined into a single raceway such that the number of conductors exceeds four (conductor count is made up of any combination of phase and neutral conductors), the following restrictions apply, which are in addition to those in NFPA 70:

Normal or Non-Essential circuits:

1. Maximum of 16 conductors in a single raceway. For up to eight conductors in a raceway, minimum raceway size: 3/4-inch. For greater than eight conductors, minimum raceway size: 1-inch. Do not install any other type of circuit in this raceway.

2. Minimum wire size for all conductors in this raceway: No. 10 AWG.

3. Only 15A and 20A branch circuit homeruns may be combined into one raceway.

GFCI circuits:

1. Do not use multi-conductor circuits, with a shared neutral, for any GFCI circuit breaker or receptacle circuit.

Emergency Power Circuits including all circuits covered under NFPA 70 Articles 700, 701 and 702:

1. Emergency power circuits may not be combined with each other or any other type of circuit.

For branch circuits fed from GFCI circuit breakers, limit the one-way conductor length to 100 feet between the panelboard and the most remote receptacle or load on the GFCI circuit.

Properly identify all terminal blocks and wire terminals for control wiring with vinyl stick-on markers or equivalent. Provide Engineer with a list of proposed identifying numbers for review prior to installing markers.

Provide an equipment-grounding conductor or bonding jumper, as applicable, in all feeders and branch circuits, sized in accordance with NFPA 70 Tables 250.66 or 250.122, as applicable, unless indicated as larger on the drawings.

Wiring shall have insulation of the proper color to match color code system in the table below unless there is a color system currently in use by the facility, in which case the colors are to match the existing system. In larger sizes where properly colored insulation is not available, use vinyl plastic electrical tape of the appropriate color around each conductor at all termination points, junctions, and pull boxes.

System Voltage:

240V and under, including 208Y/120, 120/240, 120/208, and 240D/120 systems:
1. Phase A: Black.
2. Phase B: Red.
3. Phase C: Blue.
4. Neutral: White.
5. Equipment Ground: Green.
6. Isolated Ground: Green with yellow stripe.

480V and 480Y/277V:
1. Phase A: Brown.
2. Phase B: Orange.
3. Phase C: Yellow.
4. Neutral: Gray.
5. Equipment ground: Green.

6. MC CABLE

A. CABLE SPECIFICATIONS

Metal-clad cable (MC Cable): 600V, unjacketed; UL Standard 83, 1569, and 1685; NFPA 70 Article 330; aluminum or galvanized steel interlocked armor; THHN- or XHHW-insulated conductors; color code: ICEA Method 1, with green insulated grounding conductor; listed for use in UL 1, 2, and 3 hour through-penetration firestop systems. MC Cable manufacturers: AFC Cable Systems, Encore Wire Corporation, Kaf-Tech, or Southwire.

B. APPLICATIONS OF MC CABLE

1. In lieu of flexible conduit and wiring from light fixtures located in accessible ceilings to junction boxes attached to building structure directly above the ceiling. Provide cable whips of sufficient lengths to allow for relocating each light fixture within a 5 foot radius of its installed location, but not exceeding 6 feet in unsupported lengths.

2. For vertical drops in stud walls.

3. In lieu of EMT, only for 15A and 20A branch circuits (with up to four (4) conductors, not including ground conductor), and only in dry concealed locations above grade, except where specifically not permitted by NFPA 70, owner, landlord, ahj, or noted in list below.

C. PROHIBITED USE OF MC CABLE UNLESS NOTED ABOVE

Examples of those uses include, but are not limited to the following:
1. Homeruns to panelboards (refer to Section 26: Definitions).
2. Where exposed to view.
3. Where exposed to damage.
4. Hazardous locations.
5. Wet locations.
6. When restricted otherwise.
7. When specifically disallowed by the local AHJ.
8. When specifically disallowed by the landlord.
9. Circuits supplied by an emergency or standby power source.

7. MC CABLE INSTALLATION

Secure and support cable per NFPA 70 Article 330. Secure cable within 12 inches of every box or fitting. Securing and supporting intervals shall not exceed six feet. Maintain consistent spacing to avoid derating due to bundling per NFPA 70 Section 310.15. Utilize steel cable hangers, Arlington SMC series or equivalent, to support wherever possible so cables can be routed in a neat and workmanship like manner.

8. JUNCTION BOXES, PULL BOXES, CABINETS, AND WIREWAYS

Provide junction boxes, pull boxes, cabinets, and wireways wherever necessary for proper installation of various electrical systems according to NFPA 70 and where indicated on the drawings. Size as required for the specific function or as required by NFPA 70, whichever is larger. Construction shall be of a NEMA design suitable for the environment installed.

Junction boxes installed behind wall cases and in or on other store fixtures, except where otherwise specified, shall be 4 inches square or larger with galvanized covers.

Horizontally mount junction boxes under center fixtures (and cases), handy boxes or 4-inch square boxes with tops of boxes not more than 3-1/2 inches above the floor. Size junction boxes to adequately contain all required conductors and splices.

9. OUTLET BOXES

All outlets including light fixture, switch, receptacle, and similar outlets: galvanized steel knockout boxes, suitable in design to the purpose they serve and the space they occupy. Size as required for the specific function or as required by NFPA 70, whichever is larger. Set all outlet boxes in walls, columns, floors, or ceilings so they are flush with the finished surface, accurately set, and rigidly secured in position. Provide plaster rings, extension rings and/or masonry rings as required for flush mounting. Provide approved cast outlet boxes with hubs and weatherproof covers in all areas subject to damp, wet, or harsh conditions.

Manufacturers: Appleton, Cooper, Erikson Electrical, Hoffman, Killark Electric, O-Z/Gedney, Raco, Robroy Industries, Scott Fetzer, Spring City Electrical, Thomas and Betts, Walker Systems, or Woodhead.

10. OUTLET LOCATIONS

Coordinate locations of outlet boxes. Outlets are only approximately located on the small scale drawings. Use great care in the actual location by consulting the various large scale detailed drawings used by other division trades, and by securing definite locations from the Architect.

11. MOUNTING HEIGHTS

Unless noted otherwise, install wiring devices vertically aligned at height indicated on construction drawings.

A. RECEPTACLES

Unless indicated otherwise, install vertically with the ground slot mounted at the top.

Where installed horizontally, install with the neutral slot mounted at the top.

Above counter: mount vertically aligned.

Mechanical and electrical equipment rooms and janitors closets: mount vertically aligned.

Weatherproof exterior receptacles: horizontally aligned.

GFCI receptacles: Same as general receptacles.

B. SWITCHES

General: All switches shall be mounted at the same height throughout the project unless noted otherwise.

Above Counters: Same as for receptacles.

Walls with Wainscoting: 6 inches minimum above wainscoting, but not exceeding 48 inches above finished floor.

C. MULTI-OUTLET ASSEMBLIES

As indicated on the drawings.

D. TELEPHONE/DATA OUTLET BOXES

General: Match mounting height of adjacent wiring device listed above.

Wall-mounted Telephone (Public): One at 48 inches above finished floor and one at 36 inches above finished floor.

For other than wiring devices, refer to paragraphs, articles, sections, divisions, or drawings to obtain mounting heights for specific equipment or systems.

12. WIRING DEVICES

The catalog numbers listed for wiring devices are generally for 20A rated devices. Where 15A rated devices are indicated on the drawings or required for circuit rating limitations, provide wiring devices equivalent to those specified for 20A, but rated for 15A.

All receptacles located outdoors or in damp or wet locations: Listed as 'weather Resistant', designated by a 'WR' on the faceplate.

Minor changes relative to the location of electrical equipment may be made to comply with structural and building requirements as determined in the course of construction. Provide all wiring devices of the same manufacturer and not mixed on the project, to the maximum extent possible. Provide color of toggles and receptacles as requested by the Architect.

Automatic Load Control Relay (ALCR) (also referred to as emergency shunt relay): UL 924 listed as emergency lighting and power equipment. Connect ALCR in parallel with a lighting control device. Loss of normal power shall cause relay to automatically shunt emergency power to lighting circuit regardless of lighting control device position. Emergency lighting circuit shall continue to operate at full power until normal power has been restored. Provide a two-gang junction box with separation barrier and plaster ring for the ALCR, and install it adjacent to its associated lighting control device or above accessible ceiling. Provide Acuity (Lighting Controls and Design) Model GR2001 ALCR, or equivalent by Bodine, Cooper, Hubbell, Legrand, or Leviton.

13. SWITCH AND OUTLET COVER PLATES

Switch and Outlet Plates: Colored, smooth nylon; by the same manufacturer as the wiring devices, wherever possible. Verify desired materials and colors with Architect before installation. Switch plates in unfinished rooms and spaces: Stamped steel, cadmium plated. Install groups of switches under one ganged-plate, usually horizontally; or, where required by details, vertically. Set all cover plates plumb, parallel, and finished flush with the wall.

14. WEATHERPROOF COVER PLATES

Provide GFCI receptacles for designated weatherproof receptacles, unless indicated otherwise on the drawings.

Unattended Exterior, Wet Locations or Other Locations as Indicated: In-use, NEMA 3R, recessed or flush mount, NRTL labeled plates molded from a clear high impact ultraviolet stabilized polycarbonate material for easy verification that cords are plugged in and that the GFCI is functioning. Back box must be suitable for conduit connecting. Coordinate back box with wall depth. Intermatic WP1000RC/HRC or equal.

Attended Wet Or Damp Locations: Weatherproof cover plates NRTL listed for wet locations with cover(s) closed; die-cast aluminum or Type 302 stainless steel; single-cover for switches and vertically mounted receptacles; double-cover for horizontally mounted receptacles; self-closing covers.

Cover Plates: By the same manufacturer as the wiring devices; complying with NFPA 70 ARTICLES 406.9 (A) or (B) requirements for attended or unattended use as applicable.

15. ELECTRICAL SERVICE AND GROUNDING

A. ELECTRICAL SERVICE

See drawings for type, size, voltage, phase, and other requirements.

B. CONNECTION TO SERVING UTILITIES

Provide raceways, terminations, metering provisions, and miscellaneous equipment as required for electrical and telephone services for connection by the serving utility, in strict compliance with the requirements of all applicable codes and of the serving utility involved. Verify all service terminations and connection points in the field and work in conjunction with the utility involved in the installation of all services. Provide all materials and equipment required for complete utility connection but not furnished by the serving utility. Notify the utility companies involved within two weeks after notice to proceed of all required information necessary for the utility to supply the project without delay. Pay all charges of the serving utility for the electrical service(s).

C. GROUNDING

Permanently and effectively ground and bond the electrical installation in a thorough and efficient manner, and in conformance, at a minimum, with NFPA 70, or these documents, where they exceed code requirements. Use bare or insulated conductors as specified herein, and other materials indicated on the Drawings.

16. DISTRIBUTION AND CONTROL EQUIPMENT

A. CIRCUIT BREAKERS IN EXISTING PANELBOARDS

Provide new circuit breakers for installation in existing panelboards, of the same manufacturer and type as the existing panelboard circuit breakers. Short circuit current interrupting rating of any new breaker shall be the larger of the existing panel rating or the available fault current indicated on the drawings.

B. DISCONNECT (SAFETY) SWITCHES

Disconnect (Safety) Switches: Heavy-duty, fused or non-fused (as indicated on drawings or required) NEMA KS1, externally operated, visible-blade safety switches; NEMA enclosure type indicated on the drawings or suitable for the environment in which installed. based on fusible switch and fuse sizes indicated, include Class R, J, or L fuse provisions as applicable.

Where indicated, provide fusible switches permanently labeled as suitable for use as service entrance equipment, with integral and separate neutral and ground assemblies, suitable for the sizes of conductors indicated. Do not double-lug any terminations not specifically listed as suitable for more than one conductor.

Provide switches where not furnished with the starting equipment, at all other points required by NFPA 70, and where indicated on the drawings.

Manufacturers: Eaton, G.E., Siemens, or Square D.

C. FUSES

Provide each circuit and set of fuse clips throughout the work with sizes and types as required or indicated. All fuses larger than 600A: UL Class L, similar to type KRP-C Bussmann Low Peak or equal. Fuses used to protect motors: UL Class RK5, Bussmann Fusetron or equal. Fuses used to protect all other electrical equipment: UL Class RK1, dual element, Bussmann LPS/LPN or equal. All fused devices shall be labeled as to type and size of fuse required.

Furnish three spare fuses of each size and type used on the project (except for main switch fuses, furnish one spare), neatly contained in a properly labeled cabinet.

Manufacturers: Bussmann, Edison Fuse, Mersen/Ferraz Shawmut, or Littlefuse.

17. LIGHT FIXTURES, LAMPS AND BALLASTS

A. LIGHT FIXTURE LOCATIONS

Light fixtures shown on the drawings represent general arrangements only. Refer to architectural drawings for more exact locations. Coordinate location with all other trades before installation to avoid conflicts. Coordinate light fixture locations in mechanical rooms with final installed piping and ductwork layouts.

B. LIGHT FIXTURES

Provide light fixtures as scheduled on drawings, including all lamps, all necessary accessories, material and labor to securely hang, clean, and make light fixtures completely ready for use. Light fixture model numbers scheduled on the drawings show only the manufacturer, grade, and style of light fixtures required. Provide all hangers, supports, and miscellaneous hardware required to install light fixtures, proper trim to fit each ceiling condition actually encountered, and additional tie wires connected to structure to conform to seismic requirements where required by the applicable building code.

Install light fixtures hung in continuous rows on channel struts specifically designed for this purpose.

Surface-mount all light fixtures located in areas with a ceiling but without suspended ceilings unless otherwise indicated on the drawings. Provide rigid metal spacers finished in white enamel between the top of each light fixture and the ceiling above to maintain a 1-1/2 inch space. Spacers shall be approved before installation.

Install all light fixtures located in areas without ceilings immediately below the roof-framing members, or suspended from chain hangers suitable in length to provide the indicated mounting height. Hangers: "Hydee" hanger type for outlet box mounting, complete with grounding receptacle, plug, 3-wire cord, and necessary chain.

Through-wiring of recessed light fixtures in suspended ceilings is not permitted. Connect each light fixture by a whip to a junction box. Provide cable whips of sufficient lengths to allow for relocating each light fixture within a 5-foot radius of its installed location, but not exceeding 6 feet in unsupported lengths.

C. EMERGENCY LIGHTING UNITS AND EXIT SIGNS

Description: Self-contained units complying with UL 924.

Battery: Sealed, maintenance-free, lead-acid type. The batteries shall be of suitable rating and capacity to supply and maintain at not less than 87-1/2 percent of the nominal battery voltage for the total lamp load associated with the unit for a period of at least 1-1/2 hours, or the unit equipment shall supply and maintain not less than 60 percent of the initial emergency illumination for a period of at least 1-1/2 hours.

Charger: Fully automatic, solid-state type with sealed transfer relay.

Operation: Relay automatically turns lamp on when power supply circuit voltage drops to 80 percent of nominal voltage or below. Lamp automatically disconnects from battery when voltage approaches deep-discharge level. When normal voltage is restored, relay disconnects lamps from battery, and battery is automatically recharged and floated on charger.

Test Push Button: Push-to-test type, in unit housing, simulates loss of normal power, and demonstrates unit operability.

LED Indicator Light: Indicates normal power on. Normal glow indicates trickle charge, and bright glow indicates charging at end of discharge cycle

D. LAMPS

Provide lamps and color temperatures as indicated on the drawings for all light fixtures; or, if not indicated, per the Architect and/or lighting designer. Lamps shall be by the same manufacturer for color consistency. Lamps shall be compatible with the specified light fixture. Fluorescent, metal halide, and incandescent lamp manufacturers: Eiko, G.E., Osram/Sylvania, Philips, Sorea, or Venture.

Fluorescent Lamps: Low-mercury type in compliance with NEMA LL 1; minimum color-rendering index (CRI) of 82 unless noted otherwise; minimum average rated life of 24,000 hours.

Incandescent Lamps: Type and wattage as shown on the drawings; rated 130V unless otherwise scheduled or specified.

LED Lamps and Luminaires: Comply with ANSI C78.377 for white light LED color range; minimum CRI of 80 unless noted otherwise; LED binning specification tolerance to be within 3 macadam ellipses of rated values; all LEDs used for same fixture type throughout the project must originate from the same production bin; minimum average rated life of 20,000 hours for LED lamps and 50,000 hours for LED luminaires; Rohs compliant. LED lamp manufacturers: Bridgelux, Cree, Nichia, Osram, or Xicato.

E. BALLASTS

Fluorescent Ballasts (General Requirements): Comply with UL 935 and ANSI C82.11; designed for type and quantity of lamps served; high-efficiency electronic type with NEMA premium label for linear lamps; electronic programmed-start; sound levels not exceeding Class A ambient noise levels; line transient withstand ratings as defined in ANSI/IEEE C62.41, Category A; lamp current crest factor of 1.7 or less; 95-percent power factor or greater; low heat type; thermally protected against overheating. Ballasts in indoor locations shall have disconnecting means either internal or external to the luminaire. Fluorescent ballast manufacturers: Philips Advance/Bodine, Fulham, G.E., Osram/Sylvania, Robertson, Lutron, or Universal.

Indoor Fluorescent Ballasts: 10 percent or less total harmonic distortion; operating frequency of 42 kHz or greater with no visible flicker.

LED Drivers: Comply with NRTL requirements and ANSI C82.77; designed for type and quantity of lamps served; sound levels not exceeding Class A ambient noise levels; lamp current crest factor of 1.5 or less; 90-percent power factor or greater; line transient withstand ratings as defined in ANSI/IEEE C62.41, Category A; total harmonic distortion less than 20 percent; shall tolerate sustained open circuit and short circuit output conditions without damage; shall not over-drive LEDs at a current or voltage above LED rated values; ROHS compliant; meets EN610000 requirements for input harmonics.

F. DIMMABLE LIGHT FIXTURES

For dimmable light fixtures provide both control and power wiring between light fixture and control device and between light fixtures. Quantity of low voltage and line voltage wiring and wire type shall be per manufacturer's recommendations. Coordinate light fixture and control device dimming types for compatibility.

2. MISCELLANEOUS ELECTRICAL

A. WIRING OF MECHANICAL EQUIPMENT

Provide all raceways and power wiring for all Division 23 equipment requiring electrical connections, including but not limited to pumps, water heaters, and HVAC equipment, and all line-voltage control and interlock wiring not provided under Division 23. Connect per manufacturers' wiring diagrams. Coordinate with Division 23 for disconnects and variable frequency drives (VFD) furnished with equipment, and provide all disconnect switches and final connections as required. If VFD is separate or does not have an integral disconnect feature, provide disconnect switch with auxiliary contact such that motor will be turned off if switch is off. provide VFD cable, Belden or approved equivalent, for connection of VFD to motor when required. After installing wiring, verify that each motor load has the correct phase rotation.

Verify the actual "Maximum Overcurrent Protection" (MOCP) device ratings and "Minimum Circuit Ampacity" (MCA) conductor sizing for mechanical equipment from the equipment nameplate. Base electrical installations on actual required amperages, which may vary somewhat from the conductor and equipment sizes shown on the drawings; however, in no case, reduce the size of conductors indicated on the drawings without authorization from the Engineer. Provide properly sized electrical wiring and equipment without extra cost to the Owner. Notify the Engineer of all changes required in the electrical installation due to equipment variances so that the effects on feeders, branch circuits, panelboards, fuses and circuit breakers can be checked prior to purchasing and installation. Be responsible for coordinating with Division 23 to verify the actual ampacities and correct sizes of all conductors and overcurrent protective devices for all equipment, and correct overload heaters for all motors, when starters are provided under Division 26.

B. WIRING OF THERMOSTATS, TIME AND TEMPERATURE CONTROLS

Provide all raceways, power wiring, and line-voltage control and interlock wiring not provided under Division 23, for all thermostats, temperature control devices, and controls, including, but not limited to, night-stats, water heater interlocks, time switches and override timers. See mechanical drawings for locations and temperature control diagrams. Low-voltage conductors for thermostats and temperature control system may be run exposed above finished accessible ceilings, if approved and listed for this purpose, but shall be installed in conduit within walls and where exposed in the work areas.

C. TELEPHONE SYSTEM PROVISIONS

Provide incoming telephone service raceways as indicated on drawings or as required by the serving telephone company. Provide 3/4-inch thick plywood board, fire-retardant-treated and stamped FRT, securely anchored to the wall, at the location and of the size as indicated on the drawings, Provide flush mounted telephone outlet boxes with 1 inch conduit stub-up with pull-string concealed to accessible ceiling space at locations as indicated on the drawings.

D. DATA SYSTEM PROVISIONS

Provide flush mounted data outlet boxes with 1 inch conduit stub-up with pull-string concealed to accessible ceiling space at locations as indicated on the drawings.

END OF SECTION 26B

DEAN W. CHANDLER

Architect:

brr

ARCHITECT OF RECORD:
BRR ARCHITECTURE, INC
8131 METCALF AVE
SUITE 300
OVERLAND PARK, KS 66204

www.brrarch.com

TEL: 913-262-9995
FAX: 913-262-9944

COPYRIGHT NOTICE

This drawing was prepared for use on a specific site contemporaneously with its issue date and it is not suitable for use on a different project site or at a later time. Use of this drawing on another project or on another project requires the services of properly licensed architects and engineers. Reproduction of this drawing for reuse on another project is not authorized and may be contrary to the law.

Engineer:

HENDERSON ENGINEERS
8345 LENEXA DRIVE, SUITE 300
LENEXA, KS 66214
TEL 913.742.5000 FAX 913.742.5001
WWW.HENDERSONENGINEERS.COM
2050003713
FL CORPORATE NO: EB 7606
EXPIRES 2/28/2021

Project Owner:

NIKE, Inc.
One Bowerman Drive
Beaverton, OR 97005
(503) 671-6453
www.nike.com

Project Address:

NIKE FACTORY STORE
WATERFORD LAKES SHOPPING CENTER
449 N. ALAFAYA TRAIL
ORLANDO, FL 32828
TEMPLATE ISSUE DATE: 11/26/2018

Fixture Package:

UNITE

Stamp:

THIS DOCUMENT IS RELEASED FOR THE PURPOSE OF PRELIMINARY SUBMITTAL
DEAN W. CHANDLER
LICENSE # 83831

IT IS NOT TO BE USED FOR CONSTRUCTION PURPOSES

DEAN W. CHANDLER
LICENSE # 83831

Issued For:

PERMIT/BID

Issue Date:

11/06/2020

Revisions:

NO.	REASON	DATE

PROJECT MANAGER: KH

CHECKED BY:

DRAWN BY: Author

Project Number:

62301411

Sheet Title:

ELECTRICAL SPECIFICATIONS

Sheet Number:

E4.1

COM*check* Software Version 4.1.4.3

Interior Lighting Compliance Certificate

Project Information

Energy Code: 2017 Florida Building Code, Energy Conservation
Project Title: Nike Factory - Waterford Lakes, FL
Project Type: Alteration

Construction Site:
413 N Alafaya Trail
Orlando, FL 32828

Owner/Agent:
BRR Architecture
8131 Metcalf Avenue
Overland Park, KS 66204
(913) 262-9095
brrarch.com

Designer/Contractor:
Henderson Engineers, Inc
8345 Lenexa Drive
Lenexa, KS 66214
(913) 742-5000
hendersonengineers.com

Allowed Interior Lighting Power

A Area Category	B Floor Area (ft2)	C Allowed Watts / ft2	D Allowed Watts (B X C)
1-Sales 100 (Retail:Sales Area)	8549	1.59	13593
Allowance: Furniture, clothing, cosmetics highlighting / Fix. ID: TRACK	1714 (a)	1.40	2400 (b)
Allowance: Furniture, clothing, cosmetics highlighting / Fix. ID: TRACK	1714 (a)	1.40	2400 (b)
Allowance: Furniture, clothing, cosmetics highlighting / Fix. ID: TRACK	1714 (a)	1.40	2400 (b)
Allowance: Furniture, clothing, cosmetics highlighting / Fix. ID: TRACK	1714 (a)	1.40	2400 (b)
Allowance: Furniture, clothing, cosmetics highlighting / Fix. ID: TRACK	1693 (a)	1.40	2370 (b)
2-Fitting Room 130/140/150/160 (Retail:Dressing/Fitting Room)	194	0.71	138
3-Fitting Room Vestibule 110 (Common Space Types:Corridor/Transition <8 ft wide)	229	0.66	151
5-Stockroom 200 (Common Space Types:Storage >=1000 sq.ft.)	1180	0.63	743
6-HC Office 310 (Common Space Types:Office - Enclosed)	73	1.11	81
7-IT Eq Room 330 (Common Space Types:Electrical/Mechanical)	65	0.95	62
8-Employee Lounge 300 (Common Space Types:Lounge/Breakroom)	340	0.73	248
9-ASM Office 320 (Common Space Types:Office - Open Plan)	187	0.98	183
10-Egress Corridor 170 (Common Space Types:Corridor/Transition <8 ft wide)	74	0.66	49
11-Restroom 410/420 (Common Space Types:Restrooms)	138	0.98	135
12-Janitor Closet 430 (Common Space Types:Storage <50 sq.ft.)	40	1.24	50
4-Fit Returns 120 (Common Space Types:Sales Area)	51	1.59	81
		Supplemental Allowed Watts (null) =	31
		Total Allowed Watts =	27514

(a) Area claimed may exceed total floor area when Retail Merchandise Highlighting allowance(s) are specified.
(b) Allowance is (B x C) or the actual wattage of the fixtures given in Proposed Power section, whichever is less.
(c) Supplemental watts must be associated with retail merchandise highlighting fixtures.

Proposed Interior Lighting Power

A Fixture ID : Description / Lamp / Wattage Per Lamp / Ballast	B Lamps/ Fixture	C # of Fixtures	D Fixture Watt.	E (C X D)
Sales 100 (Retail:Sales Area 8549 sq.ft.)				
TRACK: TRACK: TRACK 1: Wattage based on circuit breaker capacity (20 amps x 120 volts)	0	0	2400	2400
TRACK: TRACK: TRACK 2: Wattage based on circuit breaker capacity (20 amps x 120 volts)	0	0	2400	2400
TRACK: TRACK: TRACK 3: Wattage based on circuit breaker capacity (20 amps x 120 volts)	0	0	2400	2400
TRACK: TRACK: TRACK 4: Wattage based on circuit breaker capacity (20 amps x 120 volts)	0	0	2400	2400

A Fixture ID : Description / Lamp / Wattage Per Lamp / Ballast	B Lamps/ Fixture	C # of Fixtures	D Fixture Watt.	E (C X D)
TRACK: TRACK: TRACK 5: Wattage based on circuit breaker capacity (20 amps x 120 volts)	0	0	2400	2400
LED: AL4: 4' LINEAR: Other:	1	10	40	400
LED: AL8: 9' LINEAR: Other:	1	44	80	3520
Fitting Room 130/140/150/160 (Retail:Dressing/Fitting Room 194 sq.ft.)				
LED: R: DOWNLIGHT: Other:	1	12	19	228
LED: SM: 9' LINEAR: Other:	1	4	264	1056
Fitting Room Vestibule 110 (Common Space Types:Corridor/Transition <8 ft wide 229 sq.ft.)				
LED: RW: 9' LINEAR: Other:	1	4	34	136
LED: R: DOWNLIGHT: Other:	1	4	19	76
Stockroom 200 (Common Space Types:Storage >=1000 sq.ft. 1180 sq.ft.)				
LED: K8: 8' STRIP: Other:	1	26	26	676
LED: UC: UNDERCABINET: Other:	1	1	20	20
HC Office 310 (Common Space Types:Office - Enclosed 73 sq.ft.)				
LED: M: 2X4 TROFFER: Other:	1	2	35	70
LED: UC: UNDERCABINET: Other:	1	1	20	20
IT Eq Room 330 (Common Space Types:Electrical/Mechanical 65 sq.ft.)				
LED: M: 2X4 TROFFER: Other:	1	2	35	70
Employee Lounge 300 (Common Space Types:Lounge/Breakroom 340 sq.ft.)				
LED: M: 2X4 TROFFER: Other:	1	9	35	315
LED: UC: UNDERCABINET: Other:	1	2	20	40
ASM Office 320 (Common Space Types:Office - Open Plan 187 sq.ft.)				
LED: M: 2X4 TROFFER: Other:	1	4	35	140
LED: UC: UNDERCABINET: Other:	1	3	20	60
Egress Corridor 170 (Common Space Types:Corridor/Transition <8 ft wide 74 sq.ft.)				
LED: R: DOWNLIGHT: Other:	1	3	19	57
Restroom 410/420 (Common Space Types:Restrooms 138 sq.ft.)				
LED: R: DOWNLIGHT: Other:	1	5	19	95
Janitor Closet 430 (Common Space Types:Storage <50 sq.ft. 40 sq.ft.)				
LED: L: STRIP: Other:	1	1	40	40
Fit Returns 120 (Common Space Types:Sales Area 51 sq.ft.)				
LED: R: DOWNLIGHT: Other:	1	2	19	38
			Total Proposed Watts =	19057

Interior Lighting PASSES

Interior Lighting Compliance Statement

Compliance Statement: The proposed interior lighting alteration project represented in this document is consistent with the building plans, specifications, and other calculations submitted with this permit application. The proposed interior lighting systems have been designed to meet the 2017 Florida Building Code, Energy Conservation requirements in COM*check* Version 4.1.4.3 and to comply with any applicable mandatory requirements listed in the Inspection Checklist.

Codey Watson - Electrical Designer — Name - Title
Codey Watson — Signature
11/3/2020 — Date

COM*check* Software Version 4.1.4.3

Inspection Checklist

Energy Code: 2017 Florida Building Code, Energy Conservation

Requirements: 100.0% were addressed directly in the COM*check* software

Text in the "Comments/Assumptions" column is provided by the user in the COMcheck Requirements screen. For each requirement, the user certifies that a code requirement will be met and how that is documented, or that an exception is being claimed. Where compliance is itemized in a separate table, a reference to that table is provided.

Section # & Req.ID	Plan Review	Complies?	Comments/Assumptions
C405.6 [PR17][1]	Plans, specifications, and/or calculations provide all information with which compliance can be determined for the electrical systems and equipment and document where exceptions are claimed. Provisions are made for metering individual tenant units. Feeder connectors (for feeder and branch circuits) sized in accordance with approved plans with maximum drop of 5% voltage drop total.	☐Complies ☐Does Not ☐Not Observable ☐Not Applicable	Requirement will be met.
C103.2 [PR4][1]	Plans, specifications, and/or calculations provide all information with which compliance can be determined for the interior lighting and electrical systems and equipment and document where exceptions to the standard are claimed. Information provided should include interior lighting power calculations, wattage of bulbs and ballasts, transformers and control devices.	☐Complies ☐Does Not ☐Not Observable ☐Not Applicable	Requirement will be met.

Additional Comments/Assumptions:

1	High Impact (Tier 1)	2	Medium Impact (Tier 2)	3	Low Impact (Tier 3)

Section # & Req.ID	Rough-In Electrical Inspection	Complies?	Comments/Assumptions
C405.2.1 [EL15][1]	Lighting controls installed to uniformly reduce the lighting load by at least 50%.	☐Complies ☐Does Not ☐Not Observable ☐Not Applicable	Requirement will be met.
C405.2.1 [EL18][1]	Occupancy sensors installed in required spaces.	☐Complies ☐Does Not ☐Not Observable ☐Not Applicable	Requirement will be met.
C405.2.1, C405.2.2.3 [EL23][1]	Independent lighting controls installed per approved lighting plans and all manual controls readily accessible and visible to occupants.	☐Complies ☐Does Not ☐Not Observable ☐Not Applicable	Requirement will be met.
C405.2.2.1 [EL22][1]	Automatic controls to shut off all building lighting installed in all buildings.	☐Complies ☐Does Not ☐Not Observable ☐Not Applicable	Requirement will be met.
C405.2.3 [EL16][1]	Daylight zones provided with individual controls that control the lights independent of general area lighting.	☐Complies ☐Does Not ☐Not Observable ☐Not Applicable	**Exception:** Sidelight zones on first floor in Group A-2 and M occupancies.
C405.2.3, C405.2.3.1, C405.2.3.2 [EL20][1]	Primary sidelighted areas are equipped with required lighting controls.	☐Complies ☐Does Not ☐Not Observable ☐Not Applicable	**Exception:** Sidelight zones on first floor in Group A-2 and M occupancies.
C405.2.3, C405.2.3.1, C405.2.3.3 [EL21][1]	Enclosed spaces with daylight area under skylights and rooftop monitors are equipped with required lighting controls.	☐Complies ☐Does Not ☐Not Observable ☐Not Applicable	**Exception:** Requirement does not apply.
C405.2.4 [EL4][1]	Separate lighting control devices for specific uses installed per approved lighting plans.	☐Complies ☐Does Not ☐Not Observable ☐Not Applicable	Requirement will be met.
C405.2.4 [EL8][1]	Additional interior lighting power allowed for special functions per the approved lighting plans and is automatically controlled and separated from general lighting.	☐Complies ☐Does Not ☐Not Observable ☐Not Applicable	Requirement will be met.
C405.3 [EL6][1]	Exit signs do not exceed 5 watts per face.	☐Complies ☐Does Not ☐Not Observable ☐Not Applicable	Requirement will be met.

Additional Comments/Assumptions:

1	High Impact (Tier 1)	2	Medium Impact (Tier 2)	3	Low Impact (Tier 3)

Section # & Req.ID	Final Inspection	Complies?	Comments/Assumptions
C303.3, C408.2.5.2 [FI17][1]	Furnished O&M instructions for systems and equipment to the building owner or designated representative.	☐Complies ☐Does Not ☐Not Observable ☐Not Applicable	Requirement will be met.
C405.4.1 [FI18][1]	Interior installed lamp and fixture lighting power is consistent with what is shown on the approved lighting plans, demonstrating proposed watts are less than or equal to allowed watts.	☐Complies ☐Does Not ☐Not Observable ☐Not Applicable	*See the Interior Lighting fixture schedule for values.*
C408.2.5.1 [FI16][1]	Furnished as-built drawings for electric power systems within 90 days of system acceptance.	☐Complies ☐Does Not ☐Not Observable ☐Not Applicable	Requirement will be met.
C408.3 [FI33][1]	Lighting systems have been tested to ensure proper calibration, adjustment, programming, and operation.	☐Complies ☐Does Not ☐Not Observable ☐Not Applicable	Requirement will be met.

Additional Comments/Assumptions:

1	High Impact (Tier 1)	2	Medium Impact (Tier 2)	3	Low Impact (Tier 3)

Architect:

brr

ARCHITECT OF RECORD:
BRR ARCHITECTURE, INC
8131 METCALF AVE
SUITE 300
OVERLAND PARK, KS 66204

www.brrarch.com

TEL: 913-262-9095
FAX: 913-262-9044

COPYRIGHT NOTICE

This drawing was prepared for use on a specific site contemporaneously with its issue date and it is not suitable for use on a different project site or at a later time. Use of this drawing on another project without another project requires the services of properly licensed architects and engineers. Reproduction of this drawing for reuse on another project is not authorized and may be contrary to the law.

Engineer:

HENDERSON ENGINEERS
8345 LENEXA DRIVE, SUITE 300
LENEXA, KS 66214
TEL 913.742.5000 FAX 913.742.5001
WWW.HENDERSONENGINEERS.COM
2050003713
FL CORPORATE NO. EB 7606
EXPIRES 2/28/2021

Project Owner:

NIKE, Inc.
One Bowerman Drive
Beaverton, OR 97005
(503) 671-6453
www.nike.com

Project Address:

NIKE FACTORY STORE
WATERFORD LAKES SHOPPING CENTER
449 N. ALAFAYA TRAIL
ORLANDO, FL 32828
TEMPLATE ISSUE DATE: 11/26/2018

Fixture Package:

UNITE

Stamp:

THIS DOCUMENT IS RELEASED FOR THE PURPOSE OF PRELIMINARY SUBMITTAL
DEAN W. CHANDLER
LICENSE # 83831

IT IS NOT TO BE USED FOR CONSTRUCTION PURPOSES

DEAN W. CHANDLER
LICENSE # 83831

Issued For:

PERMIT/BID

Issue Date:

11/06/2020

Revisions:

NO.	REASON	DATE

PROJECT MANAGER:
KH
CHECKED BY:
DRAWN BY:
Author

Project Number:

62301411

Sheet Title:

ELECTRICAL ENERGY COMPLIANCE

Sheet Number:

E5.0

DEAN W. CHANDLER

FLORIDA 61G15-32.008 COMPLIANCE NOTES:

(1) SUPERVISION, EMERGENCY ALARM CIRCUITS, ACTIVATION OF LIFE SAFETY SYSTEM CONTROLS AND REMOTE SIGNALING: FIRE ALARM SYSTEM SHALL INTERFACE ALL MONITORING EQUIPMENT AND INCORPORATE REMOTE SIGNALING OF EMERGENCY CONDITIONS.

(2) APPLICABLE FIRE ALARM AND DETECTION SYSTEM CODES AND STANDARDS: NFPA 70: 2014 EDITION, NFPA 72: 2013 EDITION. NFPA 70 EDITION REFERENCED SHALL BE ADOPTED BY FAC 69A. EDITIONS NOT LISTED HERE SHALL BE AS DIRECTED IN REFERENCED STANDARD/PUBLICATIONS SECTIONS IN THE FLORIDA BUILDING CODE AND FLORIDA FIRE PREVENTION CODE. REFER TO 61G15-32.003 COMPLIANCE NOTES FOR BUILDING AND FIRE CODE EDITIONS.

(4) MINIMUM REQUIREMENTS:

(a) PLAN AND RISER: SYMBOLS LEGEND, SYSTEM RISER DIAGRAM, AND CABLING REQUIREMENTS INDICATED ON PLANS. REFER TO 61G15-32.003 COMPLIANCE NOTES FOR OCCUPANCY MAIN USE GROUP.

(b) INITIATION AND NOTIFICATION DEVICES: REFER TO PLANS FOR INITIATION AND NOTIFICATION DEVICE LOCATIONS AN CONNECTIONS. REFER TO FIRE ALARM RISER FOR ADDITIONAL INFORMATION.

(c) AUDIBLE/VISIBLE DEVICES: REFER TO PLANS FOR STROBE INTENSITIES. DECIBEL RATING SHALL BE 90 dB AT 10 FT.

(d) CLASS AND SURVIVABILITY: MATCH EXISTING CIRCUITS.

(e) MONITORING: REFER TO SEQUENCE OF OPERATION FOR IDENTIFICATION OF ALL FUNCTIONS REQUIRED BY ALARM AND CONTROLS SYSTEM.

(f) FIRE ALARM TYPE: FIRE ALARM SYSTEM TO BE COMPLETE ADDRESSABLE STYLE FIRE ALARM SYSTEM NOT REQUIRING FULL SMOKE DETECTION IN COMPLIANCE WITH THE FLORIDA FIRE PREVENTION CODE.

(g) SURGE PROTECTION: SURGE PROTECTION IS TO BE PROVIDED IN ACCORDANCE WITH NFPA REQUIREMENTS.

(h) WEATHERPROOF: SYSTEM DEVICES SHALL BE PROTECTED FROM DAMAGE DUE TO ENVIRONMENTAL FACTORS, INCLUDING TEMPERATURE, HUMIDITY OR CORROSIVE ATMOSPHERES. REFER TO PLANS FOR LOCATIONS OF WEATHERPROOF DEVICES WITH "WP" DESIGNATION.

(i) SITE PLAN: EXTERIOR FIRE DEPARTMENT NOTIFICATION APPLIANCE TO REMAIN.

(j) SMOKE DETECTION: SMOKE DETECTOR SPACING AND LOCATIONS SHALL BE IN COMPLIANCE WITH NFPA 72 REQUIREMENTS. WHERE ADDITIONAL INFORMATION IS NECESSARY BASED ON PROJECT CONDITIONS, DETAILS SHALL BE PROVIDED ON ENGINEERING DESIGN DOCUMENTS. UNLESS OTHERWISE NOTED ON PLANS, CEILINGS ARE UNDERSTOOD TO BE FLAT.

(k) SMOKE DETECTION: SMOKE STRATIFICATION IS NOT ANTICIPATED FOR THIS PROJECT.

(l) PERFORMANCE BASED CRITERIA: SYSTEM DESIGNED USING PERFORMANCE BASED CRITERIA IN ACCORDANCE WITH CODES AND STANDARDS OUTLINED IN 61G15-32.003 AND 61G15-32.008 COMPLIANCE NOTES.

(m) SYSTEM EVACUATION: SYSTEM EVACUATION SHALL BE BY MEANS OF A GENERAL EVACUATION SIGNAL.

(n) UNDERGROUND WIRING, WET LOCATIONS, OR CAMPUS STYLE WIRING: WIRING TYPE IN WET, CAMPUS STYLE, AND UNDERGROUND AREAS SHALL BE INSTALLED IN ACCORDANCE WITH NFPA 70. BURIAL DEPTH SHALL COMPLY WITH NFPA 70 REQUIREMENTS. ALL CABLES AND CONDUIT TO BE LISTED FOR WET USE WHERE REQUIRED.

(o) OPERATIONS AND MAINTENANCE DATA: CONTRACTOR TO INSTRUCT THE OWNER'S PERMANENT PERSONNEL IN THE PROPER OPERATION OF, STARTUP AND SHUTDOWN PROCEDURES AND MAINTENANCE OF THE EQUIPMENT AND COMPONENTS OF THE SYSTEMS INSTALLED UNDER THIS DIVISION. THE O&M MANUALS SHALL BE PROVIDED IN LABELED 3-RING BINDER WITH COVER, BINDING LABEL, TABBED FLY SHEETS AND PLASTIC INSERT FOLDERS FOR RECORD DRAWINGS. INCLUDE THE FOLLOWING SECTIONS WITH THE APPROPRIATE INFORMATION FOR EACH SECTION: TYPEWRITTEN INDEX, DESIGNER AND INSTALLER QUALIFICATION, COMPLETE NOMENCLATURE, MODEL NUMBER AND VENDOR INFORMATION FOR ALL PARTS, COMPLETE INSTRUCTIONS DETAILING OPERATION AND MAINTENANCE OF ALL EQUIPMENT INSTALLED, PRODUCT CUTSHEETS FOR ALL EQUIPMENT UTILIZED AND INSTALLED, RISER DIAGRAM, DEVICE ADDRESSES, RECORD COPY OF SITE-SPECIFIC SOFTWARE. PROVIDE "INSPECTION AND TESTING FORM" ACCORDING TO THE "INSPECTION, TESTING AND MAINTENANCE" CHAPTER IN NFPA 72, AND ALSO INCLUDE: EQUIPMENT TESTED, FREQUENCY OF TESTING OF INSTALLED COMPONENTS, FREQUENCY OF INSPECTION OF INSTALLED COMPONENTS, REQUIREMENTS AND RECOMMENDATIONS RELATED TO RESULTS OF MAINTENANCE, MANUFACTURER'S USER TRAINING MANUALS, MANUFACTURER'S REQUIRED MAINTENANCE RELATED TO SYSTEM WARRANTY REQUIREMENTS., ABBREVIATED OPERATING INSTRUCTIONS FOR MOUNTING AT FIRE ALARM CONTROL UNIT AND EACH ANNUNCIATOR UNIT, COPY OF ALL GUARANTEES AND WARRANTIES ISSUED, AND CONTACT LIST WITH MINIMUM THREE SERVICE REPRESENTATIVE PHONE NUMBERS.

(5) SPECIFIC EQUIPMENT: ENGINEER IS NOT ELECTING TO SPECIFY SPECIFIC EQUIPMENT AND WIRING.

(6) TEST REQUIREMENTS: TESTING SHALL BE AS OUTLINED IN PROJECT SPECIFICATIONS AND IN COMPLIANCE WITH NFPA 72 CHAPTER "INSPECTION, TESTING AND MAINTENANCE"

(7) SPECIAL REQUIREMENTS: ENGINEER IS NOT AWARE OF ANY SPECIAL REQUIREMENTS BY OWNER, INSURANCE UNDERWRITER OR LOCAL FIRE CODE AMENDMENTS.

FLORIDA 61G15-32.003 COMPLIANCE NOTES:

(1) SCOPE OF WORK: REFER TO SYSTEM SPECIFIC 61G15-32 NOTES FOR SCOPE OF WORK.

(2) ACCEPTANCE TESTING: REFER TO SYSTEM SPECIFIC 61G15-32 NOTES FOR THE APPLICABLE ACCEPTANCE TESTING REQUIREMENTS.

(3) OCCUPANCY DESCRIPTION: MAIN USE IS MERCANTILE (M).

(4) APPLICABLE CODES AND STANDARDS: FLORIDA BUILDING CODE: 7TH EDITION AND FLORIDA FIRE PREVENTION CODE: 6TH EDITION. EDITIONS NOT LISTED HERE SHALL BE AS DIRECTED IN REFERENCED STANDARD/PUBLICATIONS SECTIONS IN THE FLORIDA BUILDING CODE AND FLORIDA FIRE PREVENTION CODE. REFER TO SYSTEM SPECIFIC 61G15-32 NOTES FOR ADDITIONAL CODES AND STANDARDS.

(5) STRUCTURAL SUPPORT: FIRE PROTECTION SYSTEMS AND STRUCTURE FOR THE BUILDING ARE EXISTING.

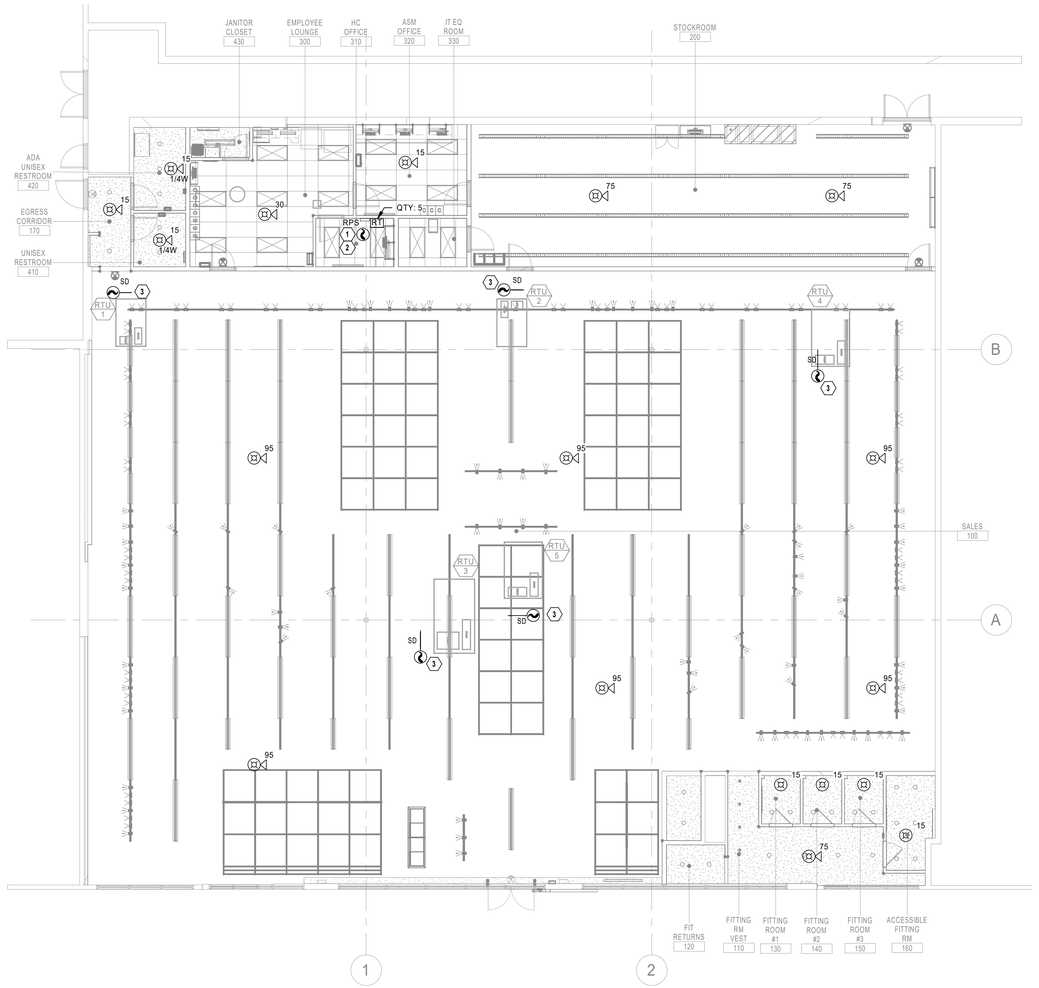

00 FIRE ALARM PLAN
1/8" = 1'-0"

SCALE: 1/8"=1'-0"

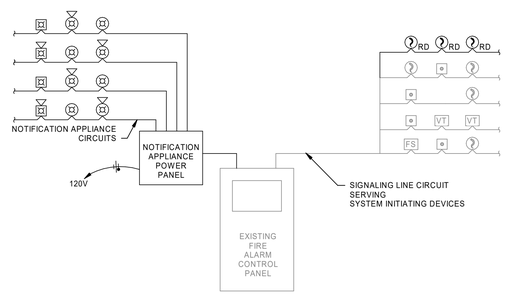

RISER DIAGRAM IS SCHEMATIC IN NATURE. NOT ALL DEVICES ARE SHOWN. REFER TO PLANS FOR EQUIPMENT QUANTITIES AND LOCATIONS.

DUCT DETECTORS MAY HAVE INTEGRAL RELAYS FOR AIR HANDLING UNIT SHUT-DOWN AND FIRE/SMOKE DAMPER CONTROL. WIRING FOR THIS FUNCTION HAS NOT BEEN SHOWN. COORDINATE WITH MECHANICAL SYSTEM INSTALLER.

REFER TO PLANS AND SPECIFICATIONS FOR ADDITIONAL INFORMATION.

1 FIRE ALARM RISER DIAGRAM - ADDRESSABLE SYSTEM (NON-VOICE)
NTS

FIRE ALARM SYMBOLS

THIS IS A MASTER LEGEND AND NOT ALL SYMBOLS OR ABBREVIATIONS ARE USED. V2.02

ABBREVIATIONS

AFF	ABOVE FINISHED FLOOR	NIC	NOT IN CONTRACT
AFG	ABOVE FINISHED GRADE	OC	ON CENTER
CD	CANDELA	PIV	POST INDICATOR VALVE
DI	DUCTILE IRON	PROVIDE	FURNISH AND INSTALL
ESFR	EARLY SUPPRESSION FAST RESPONSE	PRV	PRESSURE REDUCING VALVE
ETR	EXISTING TO REMAIN	RD	RETURN DUCT
FHC	FIRE HOSE CABINET	REV	REVISION
FP	FIRE PROTECTION	SD	SUPPLY DUCT
GC	CONTRACTOR	SF	SQUARE FEET
GPM	GALLONS PER MINUTE	TYP	TYPICAL
JB/J-BOX	JUNCTION BOX	UNO	UNLESS NOTES OTHERWISE
MAX	MAXIMUM	V	VOLT(S)
MIN	MINIMUM	W	WATTS
N/A	NOT APPLICABLE	WP	WEATHERPROOF

ANNOTATION

- FIRE ALARM PLAN NOTE CALLOUT
- CONNECTION POINT OF NEW WORK TO EXISTING
- DETAIL REFERENCE UPPER NUMBER INDICATES DETAIL NUMBER LOWER NUMBER INDICATES SHEET NUMBER
- SECTION CUT DESIGNATION

STANDARD MOUNTING HEIGHTS

AUDIBLE APPLIANCE (TOP OF APPLIANCE)	90"
FIRE ALARM ANNUNCIATOR PANEL (TOP OF DISPLAY)	60"
FIRE ALARM BELL (EXTERIOR) (CENTERLINE)	120"
FIRE ALARM CONTROL PANEL/UNIT (TOP OF DISPLAY)	60"
PULL STATION (TOP OF DEVICE)	48"
VISIBLE APPLIANCE (CENTERLINE)	84"

INSTALL DEVICES AT THE MOUNTING HEIGHTS SHOWN ABOVE UNO IN THE CONSTRUCTION DOCUMENTS. MOUNTING HEIGHTS LISTED ABOVE, OR ELSEWHERE IN THE CONSTRUCTION DOCUMENTS, ARE AFF OR AFG, UNO. ALL DEVICES SHALL BE INSTALLED IN COMPLIANCE WITH CURRENT ADA AND LOCAL REQUIREMENTS.

LINETYPE LEGEND

THROUGHOUT THE DRAWINGS DIFFERENT LINETYPES ARE USED IN COMBINATION WITH THE SYMBOLS TO INDICATE THE STATUS OF ITEMS AS EXISTING, TO BE DEMOLISHED, TO BE INCLUDED AS PART OF NEW WORK AND/OR ITEMS WHICH ARE ANTICIPATED TO BE PROVIDED IN THE FUTURE. THE STATUS OF ITEMS USING THESE LINETYPES ARE RELATIVE TO THE VIEW IN WHICH THEY APPEAR. PHASING SHOWN IN DRAWINGS IS NOT INTENDED TO FULLY DESCRIBE ALL NECESSARY CONSTRUCTION PHASING, WHICH IS DETERMINED BY THE CONTRACTOR AS PART OF THEIR RESPONSIBILITIES. ANY SUCH PHASES DESCRIBED IN THE CONSTRUCTION DOCUMENTS ARE GENERAL AND ONLY INTENDED TO INDICATE A BROAD ORDER FOR THE SAKE OF DESCRIBING THE PROJECT. THE FOLLOWING LINETYPES MAY BE USED ON ANY DEVICE, EQUIPMENT, NOTE, LINE, SHAPE, ETC.

EXISTING	NEW
DEMOLISH	FUTURE

FIRE ALARM

FACP	FIRE ALARM CONTROL PANEL/UNIT
FACP	RECESSED FIRE ALARM CONTROL PANEL/UNIT
FAAP	FIRE ALARM ANNUNCIATOR PANEL
FAAP	RECESSED FIRE ALARM ANNUNCIATOR PANEL
AMP	AMPLIFIER PANEL
RPS	REMOTE POWER SUPPLY
RT	REMOTE TEST STATION WITH INDICATING LIGHT
RL	REMOTE INDICATING LIGHT
PS	PRESSURE SWITCH LOW/HIGH
FS	WATERFLOW ALARM SWITCH
VT	CONTROL VALVE TAMPER SWITCH
DH	MAGNETIC DOOR HOLD OPEN DEVICE
CM	CONTROL MODULE
MM	MONITOR MODULE
K	FIRE DEPARTMENT KEY BOX
	PULL STATION
F	FIREFIGHTER'S PHONE JACK
	HEAT DETECTOR (E INDICATES ELEVATOR RECALL)
	SMOKE DETECTOR (E INDICATES ELEVATOR RECALL)
	SINGLE STATION SMOKE DETECTOR
	PROJECTED BEAM SMOKE DETECTOR
RD	DUCT MOUNTED SMOKE DETECTOR (SD=SUPPLY/RD=RETURN)
CO	CARBON MONOXIDE DETECTOR
	AREA OF REFUGE 2-WAY COMMUNICATION SYSTEM
F SW	WALL MOUNTED AUDIBLE NOTIFICATION APPLIANCE #W INDICATES WATTAGE (VOICE EVACUATION SYSTEMS ONLY)
##	WALL MOUNTED VISIBLE NOTIFICATION APPLIANCE ## INDICATES CANDELA
## SW ##	WALL MOUNTED AUDIBLE/VISIBLE NOTIFICATION APPLIANCE ## INDICATES CANDELA #W INDICATES WATTAGE (VOICE EVACUATION SYSTEMS ONLY)
F SW	CEILING MOUNTED AUDIBLE NOTIFICATION APPLIANCE #W INDICATES WATTAGE (VOICE EVACUATION SYSTEMS ONLY)
##	CEILING MOUNTED VISIBLE NOTIFICATION APPLIANCE ## INDICATES CANDELA
## SW ##	CEILING MOUNTED AUDIBLE/VISIBLE NOTIFICATION APPLIANCE ## INDICATES CANDELA #W INDICATES WATTAGE (VOICE EVACUATION SYSTEMS ONLY)
	END OF LINE RESISTOR
	ABORT SWITCH
	BELL

FIRE ALARM PLAN NOTES

1 PROVIDE REMOTE POWER SUPPLY TO POWER NOTIFICATION APPLIANCES.
2 PROVIDE LOW VOLTAGE WIRING FROM DUCT DETECTOR TO REMOTE TEST STATION. MOUNT REMOTE TEST STATION ON WALL AT 48" AFF. COORDINATE QUANTITIES WITH MECHANICAL SYSTEMS AND DUCT DETECTORS.
3 PROVIDE DUCT MOUNTED SMOKE DETECTOR FOR FAN POWERED MECHANICAL AIR HANDLING EQUIPMENT SHUTDOWN. INSTALL DETECTOR PER MANUFACTURER'S RECOMMENDATIONS. REFER TO MECHANICAL SHEETS FOR EQUIPMENT AND DUCTWORK LAYOUT AND DETAILS.

FIRE PROTECTION GENERAL NOTES:

1. PRIOR TO SUBMITTING BID, VISIT THE JOB SITE AND BECOME FULLY ACQUAINTED WITH THE EXISTING CONDITIONS OF THE PROJECT. REVIEW THE GENERAL NOTES, SPECIFICATIONS AND OTHER DRAWINGS FOR ADDITIONAL REQUIREMENTS WHICH MAY NOT BE SPECIFICALLY CALLED OUT IN THIS PORTION OF THE CONSTRUCTION DOCUMENTS. NOTIFY ARCHITECT, ENGINEER AND/OR OWNER OF CONFLICTS OR DISCREPANCIES PRIOR TO SUBMISSION OF BID.
2. SYSTEM DESIGN, INSTALLATION AND MATERIALS SHALL BE IN ACCORDANCE WITH APPLICABLE NFPA STANDARDS. SYSTEM SHALL ALSO MEET ALL APPLICABLE BUILDING CODES. FIRE CODES AND THE REQUIREMENTS OF THE AUTHORITY HAVING JURISDICTION AND INSURANCE CARRIER. VERIFY REQUIREMENTS PRIOR TO BID SUBMITTAL.
3. INFORMATION ON CONTRACT DOCUMENTS IS GENERAL INFORMATION AND FOR BID PURPOSES ONLY. CONTRACTOR SHALL BE FULLY RESPONSIBLE FOR THE FINAL SYSTEM DESIGN AND LAYOUT OF ALL COMPONENTS, COORDINATION WITH ALL OTHER TRADES, AND SYSTEM CALCULATIONS REQUIRED FOR APPROVAL BY THE AUTHORITY HAVING JURISDICTION, ENGINEER, AND OWNER'S INSURER.
4. THE CONTRACTOR SHALL FOLLOW THE ENGINEER OF RECORD'S SYSTEM DESIGN AND LAYOUT OF ALL COMPONENTS EXCEPT WHERE MODIFICATION TO THE DESIGN IS NECESSARY. MODIFICATIONS SHALL BE REFLECTED IN THE CONTRACTOR'S SHOP DRAWINGS AND CALCULATIONS.
5. DEVIATIONS FROM ENGINEER'S DESIGN WILL NOT BE CONSIDERED UNLESS A FORMALLY SUBMITTED RFI IS RECEIVED AND APPROVED.
6. THE CONTRACTOR SHALL PROVIDE ALL EQUIPMENT AND LABOR REQUIRED FOR A COMPLETE AND OPERATIONAL SYSTEM AS INDICATED IN THE DRAWINGS AND SPECIFICATIONS.
7. WHERE EXISTING SYSTEMS ARE PRESENT, CONTRACTOR SHALL MODIFY, RELOCATE AND/OR PROVIDE ADDITIONAL EQUIPMENT AS REQUIRED FOR SCOPE OF WORK AS REQUIRED FOR A COMPLETE AND OPERATIONAL SYSTEM. COORDINATE WITH WALLS, CEILINGS, LIGHTS, DIFFUSERS, STRUCTURE, OBSTRUCTIONS, ETC. IN AREAS AFFECTED BY SCOPE OF WORK. NEW EQUIPMENT SHALL BE COMPATIBLE WITH EXISTING SYSTEMS. CONTRACTOR SHALL REMOVE ALL ABANDONED EQUIPMENT. COORDINATE SYSTEM MODIFICATIONS TO MINIMIZE SYSTEM IMPAIRMENT, AND PROVIDE FIRE WATCH AND/OR INTERIM FIRE PROTECTION MEASURES WHERE REQUIRED BY THE AUTHORITY HAVING JURISDICTION, INSURANCE CARRIER OR OWNER.
8. PROVIDE ADDITIONAL MATERIALS AND LABOR REQUIRED DUE TO LACK OF COORDINATION OR TO MEET AUTHORITY HAVING JURSDICTION AND INSURANCE CARRIER REQUIREMENTS AT NO ADDITIONAL COST TO THE OWNER.
9. FORWARD COMPLETED CERTIFICATE OF COMPLETION AND CONTRACTOR MATERIAL TEST CERTIFICATES TO THE OWNER.
10. REFER TO SPECIFICATIONS FOR ADDITIONAL INFORMATION.

FIRE PROTECTION GENERAL DEMOLITION NOTES:

1. COORDINATE ALL DEMOLITION WITH WHAT IS SHOWN ON ARCHITECTURAL PLANS. NOTIFY ARCHITECT OF ANY DISCREPANCIES.
2. COORDINATE NEW WORK AND DEMOLITION WITH OTHER DISCIPLINES AND EXISTING CONDITIONS PRIOR TO CONSTRUCTION.
3. PRIOR TO SUBMITTING BID, VISIT THE JOB SITE AND BECOME FULLY ACQUAINTED WITH THE EXISTING CONDITIONS OF THE PROJECT. REVIEW GENERAL NOTES, SPECIFICATIONS AND OTHER DRAWINGS FOR ADDITIONAL REQUIREMENTS THAT MAY NOT BE SPECIFICALLY CALLED OUT IN THIS PORTION OF THE CONSTRUCTION DOCUMENTS. NOTIFY ARCHITECT, ENGINEER OR OWNER, AS DEFINED IN BID DOCUMENTS, OF CONFLICTS OR DISCREPANCIES PRIOR TO SUBMISSION OF BID. ADDITIONAL COMPENSATION WILL NOT BE PAID FOR LACK OF SUCH DETERMINATION, FAMILIARIZATION, AND/OR ALLOWANCE.
4. EXISTING CONDITIONS WERE TAKEN FROM ORIGINAL DRAWINGS AND SITE VISITS AND MAY NOT REFLECT EXACT "AS-BUILT" CONDITIONS. FIELD VERIFY EXISTING CONDITIONS PRIOR TO SUBMITTING FINAL BIDS. COORDINATE NEW WORK AND DEMOLITION WITH OTHER DISCIPLINES AND EXISTING CONDITIONS PRIOR TO CONSTRUCTION.
5. OWNER RETAINS RIGHTS OF SALVAGE FOR EQUIPMENT AND FIXTURES TO BE REMOVED. COORDINATE WITH THE OWNER THE EQUIPMENT AND FIXTURES TO BE SALVAGED AND THE LOCATION FOR STORAGE. AVOID DAMAGE TO EQUIPMENT DURING DEMOLITION WORK AND DURING TRANSPORT TO OWNER'S DESIGNATED STORAGE LOCATION. PROPERLY DISPOSE OF MATERIALS THAT ARE REMOVED AND ARE NOT REQUESTED TO BE SALVAGED BY THE OWNER.
6. REMOVE ITEMS SHOWN HEAVY LINED AND/OR CROSSHATCHED AND/OR NOTED TO BE REMOVED.
7. EQUIPMENT TO BE REMOVED SHALL BE KEPT FOR REINSTALLATION DURING THE CONSTRUCTION PHASE WHEN POSSIBLE AND/OR INDICATED ON THE DRAWINGS. AVOID DAMAGING EXISTING SURFACES AND EQUIPMENT TO REMAIN FOR NEW INSTALLATION. REPAIR ANY DAMAGE CAUSED DURING WORK AT NO EXTRA COST TO THE OWNER.
8. SEAL PENETRATIONS THROUGH FLOORS, WALLS, CEILINGS AND ROOFS WHERE COMPONENTS ARE REMOVED AND WHERE THE EXISTING PENETRATION IS NOT USED FOR THE NEW INSTALLATION. REPAIR DAMAGED SURFACES TO MATCH ADJACENT AREAS OR AS INDICATED ON THE ARCHITECTURAL DRAWINGS.
9. PERFORM ALL WORK ACCORDING TO THE PHASING SCHEDULE FOR THIS PROJECT. PROVIDE ALL TEMPORARY DESIGN AND/OR CONFIGURATIONS THAT MEET APPLICABLE CODE REQUIREMENTS AS NECESSARY TO CONFORM TO THE REQUIRED CONSTRUCTION PHASING OF THE PROJECT.
10. ONLY THE PORTIONS OF THE BUILDING AFFECTED BY THE SCOPE OF THE PROJECT HAVE BEEN SHOWN. INFORMATION SHOWN AS EXISTING TO REMAIN IS NOT BEING MODIFIED AS A PART OF THIS PROJECT.
11. ALL WORK SHALL BE PERFORMED SO AS TO NOT INTERRUPT SERVICE. THE CONTRACTOR SHALL PROPERLY NOTIFY THE BUILDING OWNER, LANDLORD, THE LEASER AND ADJACENT TENANTS AS APPLICABLE A MINIMUM OF 48 HOURS IN ADVANCE BEFORE PROCEEDING WITH THIS WORK.
12. REMOVE ALL UNUSED AND DEMOLISHED EQUIPMENT AND ASSOCIATED MATERIALS FROM SITE. ABANDONING UNUSED PORTIONS WILL NOT BE ACCEPTABLE.
13. SYSTEM(S) NOT ASSOCIATED WITH THE DEMOLITION SHALL BE LEFT IN SERVICE AS APPLICABLE.
14. INSPECT EXISTING EQUIPMENT TO REMAIN TO VERIFY THAT EQUIPMENT IS OPERATING PROPERLY. NOTIFY OWNER OF DAMAGED AND/OR MALFUNCTIONING COMPONENTS.
15. ALL SYSTEMS TO BE LEFT IN SERVICE PRIOR TO THE END OF EACH WORKDAY.

Architect:

brr

ARCHITECT OF RECORD:
BRR ARCHITECTURE, INC
8131 METCALF AVE
SUITE 300
OVERLAND PARK, KS 66204

www.brrarch.com

TEL: 913-262-9595
FAX: 913-262-9944

COPYRIGHT NOTICE

This drawing was prepared for use on a specific site contemporaneously with its issue date and it is not suitable for use on a different project site or at a later time. Use of this drawing for reuse on another project or another project requires the services of properly licensed architects and engineers. Reproduction of this drawing for reuse on another project is not authorized and may be contrary to the law.

Engineer:

HENDERSON ENGINEERS
8345 LENEXA DRIVE, SUITE 300
LENEXA, KS 66214
TEL 913.742.5000 FAX 913.742.5001
WWW.HENDERSONENGINEERS.COM
2050003713
FL CORPORATE NO: EB 7606
EXPIRES 2/28/2021

Project Owner:

NIKE, Inc.
One Bowerman Drive
Beaverton, OR 97005
(503) 671-6453
www.nike.com

Project Address:

NIKE FACTORY STORE
WATERFORD LAKES SHOPPING CENTER
449 N. ALAFAYA TRAIL
ORLANDO, FL 32828
TEMPLATE ISSUE DATE: 11/26/2018

Fixture Package:

UNITE

Stamp:

THIS DOCUMENT IS RELEASED FOR THE PURPOSE OF PRELIMINARY SUBMITTAL
CHRISTOPHER J. CULP
LICENSE # 63559

IT IS NOT TO BE USED FOR CONSTRUCTION PURPOSES

CHRISTOPHER J. CULP
LICENSE # 63559

Issued For:

PERMIT/BID

Issue Date:

11/06/2020

Revisions:

NO.	REASON	DATE

PROJECT MANAGER: KH
CHECKED BY:
DRAWN BY: Author

Project Number:

62301411

Sheet Title:

FIRE ALARM PLAN

Sheet Number:

FA1.0

CHRISTOPHER J. CULP

16C: FIRE ALARM SYSTEM

1. GENERAL INSTRUCTIONS

A. GENERAL REQUIREMENTS

All requirements under Division 01 (General Requirements) and the general and supplementary conditions of these specifications apply to this section and division. Where the requirements of this section and division exceed those of Division 01 (General Requirements), this section and division take precedence. Become thoroughly familiar with all its contents as to requirements that affect this division, section, or both. Work required under this division includes all material, equipment, appliances, transportation, services, and labor required to complete the entire system as required by the drawings and specifications, or reasonably inferred to be necessary to facilitate the function of each system as implied by the design and the equipment specified.

The specifications and drawings for the project are complementary, and any portion of work described in one shall be provided as if described in both. In the event of discrepancies, notify the Engineer and request clarification prior to proceeding with the work involved.

Drawings are graphic representations of the work upon which the contract is based. They show the materials and their relationship to one another, including sizes, shapes, locations, and connections. They convey the scope of work, indicating the intended general arrangement of the systems without showing all of the exact details as to elevations, offsets, control lines, and other installation requirements. Use the drawings as a guide when laying out the work and to verify that materials and equipment will fit into the designated spaces, and which when installed per manufacturers' requirements, will ensure a complete, coordinated, satisfactory, and properly operating system.

Installation of devices shall be performed or supervised by a National Institute for Certification of Engineering Technologies (NICET) Level 2 or higher fire alarm technician. Submit copies of the certification for employees through shop drawing submittals.

Refer to Division 15B Plumbing for additional requirements that apply to this installation that are not written herein.

B. SCOPE OF WORK

The scope of work in this section includes fire alarm control panels, automatic smoke detectors, fire alarm notification appliances, auxiliary fire alarm equipment, air handling unit shutdown, and battery stand-by power.

C. CODES AND STANDARDS

Provide an integrated fire alarm system, which meets the current versions of NFPA 70, National Electrical Code; NFPA 72, National Fire Alarm Code; and all local building and fire codes. All fire alarm equipment shall be Underwriters Laboratory (UL) or Factory Mutual (FM) approved for the type and class of service performed.

D. SYSTEM DESCRIPTION

The fire alarm system is existing to be modified.

The fire alarm system is a non-coded manual and automatic fire alarm system with connections to a remote supervising station. Control panel is micro-processor based, with fully addressable alarm devices.

E. SUBMITTALS

Upon being awarded a contract, submit to the Architect for approval, six (6) copies of manufacturer's shop drawings for equipment to be furnished under this contract, items requiring coordination between contractors, and sheet metal ductwork fabrication drawings. Before submitting shop drawings and material lists, verify that equipment submitted is mutually compatible and suitable for the intended use, and will fit the available space and allow ample room for maintenance. Highlight, mark, list or indicate the materials, performance criteria and accessories that are being proposed. Submit shop drawings as early as required to support the project schedule. Allow for two weeks Engineer review time plus mailing time plus a duplication of this time for resubmittal if required.

Submittals and shop drawings shall not contain the firm name, logo, seal, or signature of the Engineer. They shall not be copies of the work product of the Engineer. If the Contractor desires to use elements of such product, refer to paragraph "Electronic Drawing Files" for procedures to be used.

The checking and subsequent approval of such shop drawings by the Engineer shall not relieve the Contractor from responsibility for errors in dimensions, details, size of members, quantities, omissions of components or fittings; coordination of electrical requirements; or for coordinating items with actual building conditions. Proceed with the procurement and installation of equipment only after receiving approved shop drawings relative to each item.

Submit a detailed sequence of operation. Pre-printed, generic material will not be accepted and will be rejected. Highlight, mark, list or indicate the materials, performance criteria and accessories that are being proposed.

Submit shop drawings showing fire alarm floor plans and a full tenant riser diagram. Fire alarm floor plans and riser diagram shall show fire alarm control panel, annunciator, all fire alarm initiating devices and notification appliances. Show typical wiring diagrams of control panels, annunciator and each device and wiring connections required. Show all interfaces to other systems, such as temperature control systems, and security systems.

Where required by the AHJ, Contractor is responsible for obtaining a professional engineer or NICET stamp and signature on their shop drawing submittal. The Engineer is not responsible and will not provide this.

Shop drawings shall be produced using Computer Aided Design. Hand drawn documents will not be reviewed or approved.

Shop drawing scale shall match the Engineer's drawings where possible. Scale shall not be less than 3/32" = 1'-0".

Submit a bill of material and manufacturers product data for all devices and equipment.

Refer to Division 01 for acceptance of electronic submittals for this project. For electronic submittals, Contractor shall submit the documents in accordance with the procedures specified in Division 01. Contractor shall notify the Architect and Engineer that the shop drawings have been posted. If electronic submittal procedures are not defined in Division 01, Contractor shall include the website, user name and password information needed to access the submittals. For submittals sent by e-mail, Contractor shall copy the designated representatives of the Architect and Engineer. Contractor shall allow the Engineer review time as specified above in the construction schedule. Contractor shall submit only the documents required to purchase the materials and/or equipment in the electronic submittal and shall clearly indicate the materials, performance criteria and accessories being proposed. General product catalog data not specifically noted to be part of the specified product will be rejected and returned without review.

F. QUALIFICATIONS

The manufacturer shall be a company specializing in manufacturing the products specified in this section with minimum three years documented experience. The installer shall be a company specializing in installing the products specified in this section with minimum three years documented experience, be a bonded and licensed contractor and merchant of electronic automated fire alarm systems, and employ full-time factory-trained installers and technicians. The equipment manufacturer's service department shall be fully stocked in standard parts and components and engaged in the maintenance of fire alarm systems. On-the-premises service shall be available within 4 hours of notification, 7 days a week, 24 hours a day. Furnish service and maintenance of fire alarm system for one year from date of substantial completion.

G. WARRANTIES

Warrant each system and each element thereof against all defects due to faulty workmanship, design, or material for a period of 12 months from date of Substantial Completion, unless specific items are noted to carry a longer warranty in the construction documents or manufacturer's standard warranty exceeds 12 months. Remedy all defects, occurring within the warranty period(s), as stated in the General Conditions and Division 01.

All corrective software modifications made during warranty periods shall be updated on all user documentation and on user and manufacturer archived software disks.

Warranties shall include labor and material, including travel expenses. Make repairs or replacements without any additional costs to the Owner, and to the satisfaction of the Owner, Architect, and Engineer.

Perform the remedial work promptly, upon written notice from the Engineer or Owner.

At the time of Substantial Completion, deliver to the Owner all warranties, in writing and properly executed, including term limits for warranties extending beyond the one year period and any actions the Owner must take in order to maintain warranty status. Each warranty instrument shall be addressed to the Owner and state the commencement date and term.

2. MATERIALS AND INSTALLATION

A. MANUFACTURERS

Subject to compliance with requirements, provide products to match the manufacturer of the existing devices.

B. FIRE ALARM CONTROL PANEL

The fire alarm control panel is existing to remain.

Power Supply: Provide two separate and reliable power supplies. The control panel shall receive 120 Vac power via a dedicated branch circuit of the building's electrical system. Each shall have adequate capacity for the system. The fire alarm contractor shall submit battery calculations for review and approval. The calculations shall indicate each device and the load required in stand-by and alarm mode. The secondary power system shall be a battery-operated emergency power supply and charger with capacity for operating system in standby mode for 24 hours followed by alarm mode for 5 minutes.

Initiating Device Circuits: Provide circuitry, which meets the performance requirements during abnormal conditions, based upon the style and class of the circuitry selected. Initiating device circuits shall match existing circuits.

Notification Appliance Circuits: Provide circuitry, which meets the performance requirements during abnormal conditions, based upon the style and class of the circuitry selected. Notification appliance circuits shall be match existing circuits.

Signaling Line Circuits: Provide circuitry, which meets the performance requirements during abnormal conditions, based upon the style and class of the circuitry selected. Signaling line circuitry shall be match existing circuits.

Auxiliary Relays: Provide sufficient SPDT auxiliary relay contacts to provide accessory functions specified.

Provide trouble acknowledge, drill, and alarm silence switch.

Lamp Test: Manual lamp test function causes each LED to function at fire alarm control panel.

Drill Sequence of Operation: Manual drill function causes alarm mode operation as described above.

Addressable systems shall have silent walk test, history logging for a minimum of 400 events, 80 character LCD display.

C. SEQUENCE OF OPERATIONS

The sequence of operations is existing to remain. where guidance is needed refer to the following.

Trouble Sequence of Operation: System or circuit trouble places system in trouble mode, which causes the following system operations:

1. Visible and audible trouble alarm indicated at fire alarm control panel and remote annunciator panel (if provided).
2. Trouble signal transmitted to supervising station.
3. Manual acknowledge function at fire alarm control panel silences audible trouble alarm; visible alarm is displayed until initiating failure or circuit trouble is cleared.

Supervisory Sequence of Operation: The activation of any sprinkler valve tamper switch or duct-mounted smoke detector places system in supervisory mode, which causes the following system operations:

1. Visible and audible supervisory alarm indicated by address at fire alarm control panel and remote annunciator panel (if provided).
2. Supervisory signal transmitted to supervising station.
3. Duct-mounted smoke detectors shall shutdown their respective unit upon detection of smoke and remain down until manually reset.
4. Manual acknowledge function at fire alarm control panel and remote annunciator panel silences audible supervisory alarm; visible alarm is displayed until device is returned to its normal position/supervisory condition is cleared.

Alarm Sequence of Operation: Actuation of an alarm initiating device places system in alarm mode, which causes the following system operations.

1. Audible notification appliances shall sound until silenced by the alarm silence switch at the control panel.
2. All visible alarm notification appliances shall display a continuous synchronized pattern until reset by the Alarm Reset Switch.
3. Alarm signal transmitted to supervising station.
4. All air-handling systems that are monitored shall shutdown and remain down until the fire alarm control panel is reset.
5. The alarm LED shall flash on the control panel and remote annunciator panel until the alarm has been acknowledged at the control panel/remote annunciator panel. Once acknowledged, this same LED shall latch on and the custom label for the address in alarm shall be displayed on the alphanumeric LCD readout. A subsequent alarm received from another address after acknowledged shall flash the alarm LED on the control panel showing the new alarm information.
6. A pulsing alarm tone shall occur within the control panel until acknowledged.

D. INITIATING DEVICES

Smoke Detector (Photoelectric type): Device shall have visible indication of detector actuation, self-restoring, plug-in with an integral addressable module indicating the detector status. Photoelectric detectors shall have sensitivity between 0.5 and 3.5 percent/foot smoke obscuration.

Duct Mounted Smoke Detector: Photoelectric detector along with a standard, relay or isolator detector mounting base. Provide for variations in duct air velocity between 100 and 4000 feet per minute. Protect the measuring chamber from damage and insects. Provide an air exhaust tube and an air sampling inlet tube that extends into the duct air stream up to ten feet. Provide drilling templates and gaskets to facilitate locating and mounting the housing. Provide remote alarm LEDs and remote test stations as shown on the plans.

E. NOTIFICATION APPLIANCES

Alarm Horn: Surface type fire alarm horn. Sound rating: 90 dB at 10 feet.

Visible Alarm Notification Appliances (Strobes): Strobes shall be xenon or equivalent, unfiltered or clear filtered white light, a minimum intensity of 15/75 candela and as indicated on drawings, flash rate range from 1 to 3 Hz, a maximum pulse duration of 0.2 sec with a maximum duty cycle of 40 percent. Strobe shall meet all requirements of the Americans with Disabilities Act.

Audible/Visible Alarm Notification Appliances (Horn/Strobes): Combination units shall provide a common enclosure for the fire alarm audible and visible alarm appliances and be UL listed for its purpose. Minimum audible level and strobe intensity shall meet all requirements for separate appliances.

Provide flush or recessed devices unless otherwise noted.

F. AUXILIARY DEVICES

Control Relay Module: Provide intelligent control relay modules. The control relay module shall provide one form "C" dry relay contact rated at 2 amps at 24 Vdc to control external appliances or equipment shutdown. The control relay shall be rated for pilot duty and releasing systems. The position of the relay contact shall be confirmed by the system firmware.

G. FIRE ALARM WIRE AND CABLE

Fire Alarm Power Branch Circuits: Building wire as specified in Division 16B.

Signaling Line, Initiating Device, and Notification Appliance Circuits: Power limited fire-protective signaling cable, solid copper conductor, 300 Volts insulation, suitable for temperature, conditions and location installed. Minimum wire size for initiating device circuits, control circuits and notification appliance circuits shall be determined by calculations and manufacturer's requirements or recommendations. Wire and cable shall be twisted and shielded if recommended by the system manufacturer. Initiating, notification, and control circuits shall be sized based on 20 percent additional power consuming devices. The conductors shall meet the requirements of NEC Article 760.

All wiring provided on this project shall be UL listed for the intended use. All wiring including wiring to existing modified devices and appliances shall be new.

3. EXECUTION

A. GENERAL

Install, program, and test all new equipment identified in this contract and revise existing equipment as noted.

The installation supervisor shall be on the job site during the entire installation. The installation supervisor shall maintain marked up copies of the drawings at the job site showing as-built conditions. These drawings shall be updated daily and available for Owner review.

Provide all required conduit and all associated hardware and install (pull), connect, and test all cable for a complete fire alarm system. Install all wiring in accordance with the guidelines of these specifications and documents as well as the NFPA codes and standards listed in these specifications.

B. INSTALLATION

Install all wiring in conduit. Minimum allowable conduit size shall be 3/4 inch. Size the conduit so that conduit fill does not exceed 75 percent of NFPA 70 maximum fill requirements. Cables in vertical risers shall not exceed 50 percent of NFPA 70 maximum fill requirements. Conduit installation shall be as required by the Contractor's layout and as described in these specifications. All conduit field routing shall be acceptable to the Owner. Routing not acceptable shall be rerouted and replaced without expense to the Owner.

Conceal all wire, cable, conduit, and raceways in walls, ceiling spaces, electrical shafts, or closets in finished areas except as specifically noted otherwise. Conduit and raceways may be exposed in unfinished areas or where specifically approved by the Owner.

Except as otherwise specified or indicated on the drawings, Install all conduit parallel or perpendicular to dominant surfaces with right angle turns made of symmetrical bends or fittings. Except where prevented by the location of other work, a single conduit or a conduit group shall be centered on structural members.

Locate conduit at least six inches from hot water or steam pipes and from other hot surfaces. Conduit shall not block access to any existing equipment or fixtures.

Label all conduits and junction boxes as specified in Division 16B.

Terminate all wiring at devices or panels using terminal connectors for screw type terminals. All terminal connectors for conductors shall be pre-insulated ring type or pre-insulated spade type. Pre-insulated terminal connectors shall include a vinyl sleeve, color coded to indicate conductor size. Pre-insulated terminal connectors shall include a metallic support sleeve bonded to the vinyl-insulating sleeve and designed to grip the conductor insulation.

Mount end-of-line device in box with last device or separate box adjacent to last device in circuit for conventional hardwired Class B initiating and notification appliance circuits.

Securely fasten conduit to all boxes and cabinets. Threads on metallic conduit shall project through the wall of the box to allow the bushing to butt against the end of the conduit. The locknuts both inside and outside shall then be tightened sufficiently to bond the conduit securely to the box. Conduit shall enter cabinets from the bottom and sides only.

Install ceiling mounted initiating devices in areas with exposed structure tight to underside of floor/roof deck.

Install ceiling mounted visible and audible/visible notification appliances In areas with exposed structure to bottom of floor/roof structure or at 30 ft AFF, whichever is lower.

Install ceiling mounted visible and audible/visible notification appliances in areas with finished ceilings flush with bottom of ceiling or at 30 ft AFF, whichever is lower.

Make conduit and wiring connections to equipment provided by others.

Provide strobe synchronization as required per NFPA 72.

C. FIELD QUALITY CONTROL

Systems shall be checked and tested in accordance with the instructions provided by the manufacturer to ensure that the system functions as required and is free of grounds, opens, and shorts. Each device shall be tested. Smoke detectors shall be tested with products of combustion.

Upon completion of the system installation and before the date of final acceptance, a factory-trained technician shall perform all necessary tests and adjustments and shall file a Letter of Certification and a Certificate of Completion (NFPA 72) with the Owner indicating that the system functions and conforms to the specifications.

Test in accordance with NFPA 72 and local fire department requirements.

D. MANUFACTURER'S FIELD SERVICES

Include services of factory trained and certified technician to supervise installation, adjustments, final connections, and system testing as performed by the fire alarm contractor's factory-trained technicians.

The equipment supplier's factory trained technician shall train the Owner's personnel in the proper use and maintenance of the system. Training sessions shall be conducted as needed, not to exceed a total of 2 sessions, with each session lasting a maximum of 4 hours each.

E. ACCEPTANCE TESTING

Upon completion of the system installation, a factory-trained technician shall perform all necessary tests and adjustments in the presence of the Owner's designated personnel.

END OF SECTION 16C

Architect:

brr

ARCHITECT OF RECORD:
BRR ARCHITECTURE, INC
8131 METCALF AVE
SUITE 300
OVERLAND PARK, KS 66204

www.brrarch.com

TEL: 913-262-9095
FAX: 913-262-9044

COPYRIGHT NOTICE

This drawing was prepared for use on a specific site contemporaneously with its issue date and it is not suitable for use on a different project site or at a later time. Use of this drawing for construction on another project requires the services of properly licensed architects and engineers. Reproduction of this drawing for reuse on another project is not authorized and may be contrary to the law.

Engineer:

HENDERSON ENGINEERS
8345 LENEXA DRIVE, SUITE 300
LENEXA, KS 66214
TEL 913.742.5000 FAX 913.742.5001
WWW.HENDERSONENGINEERS.COM
2050003713
FL CORPORATE NO. EB 7606
EXPIRES 2/28/2021

Project Owner:

NIKE, Inc.
One Bowerman Drive
Beaverton, OR 97005
(503) 671-6453
www.nike.com

Project Address:

NIKE FACTORY STORE
WATERFORD LAKES SHOPPING CENTER
449 N. ALAFAYA TRAIL
ORLANDO, FL 32828
TEMPLATE ISSUE DATE: 11/26/2018

Fixture Package:

UNITE

Stamp:

THIS DOCUMENT IS RELEASED FOR THE PURPOSE OF PRELIMINARY SUBMITTAL
CHRISTOPHER J. CULP
LICENSE # 63559

IT IS NOT TO BE USED FOR CONSTRUCTION PURPOSES

CHRISTOPHER J. CULP
LICENSE # 63559

Issued For:

PERMIT/BID

Issue Date:

11/06/2020

Revisions:

NO.	REASON	DATE

PROJECT MANAGER:
KH

CHECKED BY:

DRAWN BY:
Author

Project Number:

62301411

Sheet Title:

FIRE ALARM SPECIFICATIONS

Sheet Number:

FA2.0

CHRISTOPHER J CULP

FLORIDA 61G15-32.004 COMPLIANCE NOTES:

(1) THE FIRE PROTECTION SYSTEM IS AN EXISTING TO BE MODIFIED WET AUTOMATIC SPRINKLER SYSTEM.

(2) MINIMUM DESIGN INFORMATION

(a) POINT OF SERVICE: POINT OF SERVICE IS EXISTING TO REMAIN. NO UNDERGROUND PIPING WORK IS ANTICIPATED FOR THIS SCOPE OF WORK.

(b) APPLICABLE NFPA STANDARDS: NFPA 13: 2013 EDITION. NFPA STANDARDS NOT LISTED HERE SHALL BE AS DIRECTED IN REFERENCED STANDARD/PUBLICATIONS SECTIONS IN THE FLORIDA BUILDING CODE AND FLORIDA FIRE PREVENTION CODE.

(c) CLASSIFICATION OF HAZARD OCCUPANCY: SALES FLOOR AREAS DESIGNED FOR EXTRA HAZARD (GROUP 1), STOCKROOM AREAS DESIGNED FOR EXTRA HAZARD (GROUP 1), OFFICE, RESTROOM, AND BREAKROOM AREAS DESIGNED FOR ORDINARY HAZARD (GROUP 2).

(d) DESIGN APPROACH: SPRINKLER RESPONSE AND TEMPERATURE TO BE IN ACCORDANCE WITH NFPA 13 BASED ON HAZARD CATEGORY AND AREA TYPE. RESPONSES SHALL NOT BE MIXED WITHIN ANY GIVEN COMPARTMENT IN ACCORDANCE WITH NFPA 13. EXTENDED COVERAGE SPRINKLERS ARE ALLOWED AS PERMITTED BY NFPA 13 REQUIREMENTS. SPRINKLER TEMPERATURE RATINGS NEAR HEAT-PRODUCING SOURCES SHALL BE IN ACCORDANCE WITH NFPA 13.

REFER TO NIKE MINIMUM DESIGN REQUIREMENTS TABLE ON SHEET FOR DENSITIES USED.

(e) CHARACTERISTIC OF WATER SUPPLY: UNDERGROUND WATER MAIN CONFIGURATION EXISTING TO REMAIN. THE ENGINEER IS NOT AWARE OF ANY SUPPLY, DURATION OR RELIABILITY ISSUES THAT MAY AFFECT THE MOST HYDRAULICALLY DEMANDING DESIGN AREA.

(f) FIRE HYDRANT FLOW TEST DATA: FIRE HYDRANT FLOW TEST DATA PERFORMED BY WAYNE AUTOMATIC FIRE SPRINKLERS, INC. EMPLOYEE DEREK GOKEY ON 10/27/2020 PROVIDES THE FOLLOWING: 68 PSI STATIC, 52 PSI RESIDUAL WHILE FLOWING 1130 GPM. BOTH THE STATIC HYDRANT AND RESIDUAL/FLOW HYDRANT ARE LOCATED AT 449 N. ALAFAYA TRAIL.

(g) VALVING AND ALARM REQUIREMENTS: SYSTEM RISER IS EXISTING AND SHALL BE EQUIPPED WITH A MONITORED WATER FLOW INDICATOR. VALVES CONTROLLING SPRINKLER SYSTEM SHALL HAVE TAMPER SWITCHES MONITORED BY THE CENTRAL STATION.

(h) MICROBIAL INDUCED CORROSION (MIC): THE ENGINEER HAS MADE REASONABLE EFFORTS AND IS NOT AWARE OF KNOWN CONDITIONS THAT WOULD INDICATE MIC IS PRESENT IN THE WATER SUPPLY SYSTEMS IN THIS LOCATION.

(i) BACKFLOW PREVENTION AND METERING SPECIFICATIONS: THE BACKFLOW PREVENTION AND METERING EQUIPMENT ARE EXISTING. APPROPRIATE BACKFLOW PRESSURE LOSS SHALL BE INCLUDED IN HYDRAULIC CALCULATIONS.

(j) QUALITY AND PERFORMANCE SPECIFICATIONS OF YARD AND INTERIOR WET FIRE PROTECTION COMPONENTS: UNDERGROUND AND YARD COMPONENTS ARE EXISTING TO REMAIN. ALL NEW INTERIOR WET FIRE PROTECTION COMPONENTS SHALL BE U/L LISTED AND/OR FM APPROVED FOR FIRE PROTECTION USE.

(k) FIRE PUMP: A FIRE PUMP IS NOT ANTICIPATED FOR THIS PROJECT.

(l) FIREWATER STORAGE TANK: A FIREWATER STORAGE TANK IS NOT ANTICIPATED FOR THIS PROJECT.

(m) OWNER'S CERTIFICATE: THE OWNER SHALL PROVIDE A CERTIFICATE FOR THE ANTICIPATED DISPLAY OF PRODUCTS

(3) CONTRACTOR SUBMITTALS WHICH DEVIATE FROM THE ABOVE MINIMUM DESIGN PARAMETERS SHALL BE CONSIDERED MATERIAL DEVIATIONS AND REQUIRE SUPPLEMENTAL ENGINEERING APPROVAL AND DOCUMENTATION VIA AN OFFICIAL REQUEST FOR INFORMATION (RFI).
ACCEPTANCE TESTING: THE ACCEPTANCE TESTING OF THE FIRE PROTECTION SYSTEM(S) AND COMPONENTS SHALL BE IN COMPLIANCE WITH THE REQUIREMENTS OF CONTRACTOR'S MATERIAL AND TEST CERTIFICATE FOR UNDERGROUND PIPING AND CONTRACTOR'S MATERIAL AND TEST CERTIFICATE FOR ABOVEGROUND PIPING AS OUTLINED IN NFPA 13.

WATER SUPPLY INFORMATION:

OBTAINED FROM: WAYNE AUTOMATIC FIRE SPRINKLERS, INC.

DATE 10/27/2020
STATIC PRESSURE: 68 PSI
RESIDUAL PRESSURE: 52 PSI
WATER FLOW: 1130 GPM

FIRE SPRINKLER GENERAL DEMOLITION NOTES:

1. COORDINATE ALL DEMOLITION WITH WHAT IS SHOWN ON ARCHITECTURAL PLANS. NOTIFY ARCHITECT OF ANY DISCREPANCIES.
2. COORDINATE NEW WORK AND DEMOLITION WITH OTHER DISCIPLINES AND EXISTING CONDITIONS PRIOR TO CONSTRUCTION.
3. PRIOR TO SUBMITTING BID, VISIT THE JOB SITE AND BECOME FULLY ACQUAINTED WITH THE EXISTING CONDITIONS OF THE PROJECT. REVIEW GENERAL NOTES, SPECIFICATIONS AND OTHER DRAWINGS FOR ADDITIONAL REQUIREMENTS THAT MAY NOT BE SPECIFICALLY CALLED OUT IN THIS PORTION OF THE CONSTRUCTION DOCUMENTS. NOTIFY ARCHITECT, ENGINEER OR OWNER, AS DEFINED IN BID DOCUMENTS, OF CONFLICTS OR DISCREPANCIES PRIOR TO SUBMISSION OF BID. ADDITIONAL COMPENSATION WILL NOT BE PAID FOR LACK OF SUCH DETERMINATION, FAMILIARIZATION, AND/OR ALLOWANCE.
4. EXISTING CONDITIONS WERE TAKEN FROM ORIGINAL DRAWINGS AND SITE VISITS AND MAY NOT REFLECT EXACT "AS-BUILT" CONDITIONS. FIELD VERIFY EXISTING CONDITIONS PRIOR TO SUBMITTING FINAL BIDS. COORDINATE NEW WORK AND DEMOLITION WITH OTHER DISCIPLINES AND EXISTING CONDITIONS PRIOR TO CONSTRUCTION.
5. OWNER RETAINS RIGHTS OF SALVAGE FOR EQUIPMENT AND FIXTURES TO BE REMOVED. COORDINATE WITH THE OWNER THE EQUIPMENT AND FIXTURES TO BE SALVAGED AND THE LOCATION FOR STORAGE. AVOID DAMAGE TO EQUIPMENT DURING DEMOLITION WORK AND DURING TRANSPORT TO OWNER'S DESIGNATED STORAGE LOCATION. PROPERLY DISPOSE OF MATERIALS THAT ARE REMOVED AND ARE NOT REQUESTED TO BE SALVAGED BY THE OWNER.
6. REMOVE ITEMS SHOWN HEAVY LINED AND/OR CROSSHATCHED AND/OR NOTED TO BE REMOVED.
7. EQUIPMENT TO BE REMOVED SHALL BE KEPT FOR REINSTALLATION DURING THE CONSTRUCTION PHASE WHEN POSSIBLE AND/OR INDICATED ON THE DRAWINGS. AVOID DAMAGING EXISTING SURFACES AND EQUIPMENT TO REMAIN FOR NEW INSTALLATION. REPAIR ANY DAMAGE CAUSED DURING WORK AT NO EXTRA COST TO THE OWNER.
8. SEAL PENETRATIONS THROUGH FLOORS, WALLS, CEILINGS AND ROOFS WHERE COMPONENTS ARE REMOVED AND WHERE THE EXISTING PENETRATION IS NOT USED FOR THE NEW INSTALLATION. REPAIR DAMAGED SURFACES TO MATCH ADJACENT AREAS OR AS INDICATED ON THE ARCHITECTURAL DRAWINGS.
9. PERFORM ALL WORK ACCORDING TO THE PHASING SCHEDULE FOR THIS PROJECT. PROVIDE ALL TEMPORARY DESIGN AND/OR CONFIGURATIONS THAT MEET APPLICABLE CODE REQUIREMENTS AS NECESSARY TO CONFORM TO THE REQUIRED CONSTRUCTION PHASING OF THE PROJECT.
10. ONLY THE PORTIONS OF THE BUILDING AFFECTED BY THE SCOPE OF THE PROJECT HAVE BEEN SHOWN. INFORMATION SHOWN AS EXISTING TO REMAIN IS NOT BEING MODIFIED AS A PART OF THIS PROJECT.
11. ALL WORK SHALL BE PERFORMED SO AS TO NOT INTERRUPT SERVICE. THE CONTRACTOR SHALL PROPERLY NOTIFY THE BUILDING OWNER, LANDLORD, THE LEASER AND ADJACENT TENANTS AS APPLICABLE A MINIMUM OF 48 HOURS IN ADVANCE BEFORE PROCEEDING WITH THIS WORK.
12. REMOVE ALL UNUSED AND DEMOLISHED EQUIPMENT AND ASSOCIATED MATERIALS FROM SITE. ABANDONING UNUSED PORTIONS WILL NOT BE ACCEPTABLE.
13. SYSTEM(S) NOT ASSOCIATED WITH THE DEMOLITION SHALL BE LEFT IN SERVICE AS APPLICABLE.
14. INSPECT EXISTING EQUIPMENT TO REMAIN TO VERIFY THAT EQUIPMENT IS OPERATING PROPERLY. NOTIFY OWNER OF DAMAGED AND/OR MALFUNCTIONING COMPONENTS.
15. ALL SYSTEMS TO BE LEFT IN SERVICE PRIOR TO THE END OF EACH WORKDAY.

FIRE SPRINKLER GENERAL NOTES:

1. PRIOR TO SUBMITTING BID, VISIT THE JOB SITE AND BECOME FULLY ACQUAINTED WITH THE EXISTING CONDITIONS OF THE PROJECT. REVIEW THE GENERAL NOTES, SPECIFICATIONS AND OTHER DRAWINGS FOR ADDITIONAL REQUIREMENTS WHICH MAY NOT BE SPECIFICALLY CALLED OUT IN THIS PORTION OF THE CONSTRUCTION DOCUMENTS. NOTIFY ARCHITECT, ENGINEER AND/OR OWNER OF CONFLICTS OR DISCREPANCIES PRIOR TO SUBMISSION OF BID.
2. SYSTEM DESIGN, INSTALLATION AND MATERIALS SHALL BE IN ACCORDANCE WITH APPLICABLE NFPA STANDARDS. SYSTEM SHALL ALSO MEET ALL APPLICABLE BUILDING CODES, FIRE CODES AND THE REQUIREMENTS OF THE AUTHORITY HAVING JURISDICTION AND INSURANCE CARRIER. VERIFY REQUIREMENTS PRIOR TO BID SUBMITTAL.
3. INFORMATION ON CONTRACT DOCUMENTS IS GENERAL INFORMATION AND FOR BID PURPOSES ONLY. CONTRACTOR SHALL BE FULLY RESPONSIBLE FOR THE FINAL SYSTEM DESIGN AND LAYOUT OF ALL COMPONENTS, COORDINATION WITH ALL OTHER TRADES, AND SYSTEM CALCULATIONS REQUIRED FOR APPROVAL BY THE AUTHORITY HAVING JURISDICTION, ENGINEER, AND OWNER'S INSURER.
4. THE CONTRACTOR SHALL FOLLOW THE ENGINEER OF RECORD'S SYSTEM DESIGN AND LAYOUT OF ALL COMPONENTS EXCEPT WHERE MODIFICATION TO THE DESIGN IS NECESSARY. MODIFICATIONS SHALL BE REFLECTED IN THE CONTRACTOR'S SHOP DRAWINGS AND CALCULATIONS.
5. DEVIATIONS FROM ENGINEER'S DESIGN WILL NOT BE CONSIDERED UNLESS A FORMALLY SUBMITTED RFI IS RECEIVED AND APPROVED.
6. THE CONTRACTOR SHALL PROVIDE ALL EQUIPMENT AND LABOR REQUIRED FOR A COMPLETE AND OPERATIONAL SYSTEM AS INDICATED IN THE DRAWINGS AND SPECIFICATIONS.
7. WHERE EXISTING SYSTEMS ARE PRESENT, CONTRACTOR SHALL MODIFY, RELOCATE AND/OR PROVIDE ADDITIONAL EQUIPMENT AS REQUIRED FOR SCOPE OF WORK AS REQUIRED FOR A COMPLETE AND OPERATIONAL SYSTEM. COORDINATE WITH WALLS, CEILINGS, LIGHTS, DIFFUSERS, STRUCTURE, OBSTRUCTIONS, ETC. IN AREAS AFFECTED BY SCOPE OF WORK. NEW EQUIPMENT SHALL BE COMPATIBLE WITH EXISTING SYSTEMS. CONTRACTOR SHALL REMOVE ALL ABANDONED EQUIPMENT, COORDINATE SYSTEM MODIFICATIONS TO MINIMIZE SYSTEM IMPAIRMENT, AND PROVIDE FIRE WATCH AND/OR INTERIM FIRE PROTECTION MEASURES WHERE REQUIRED BY THE AUTHORITY HAVING JURISDICTION, INSURANCE CARRIER OR OWNER.
8. PROVIDE ADDITIONAL MATERIALS AND LABOR REQUIRED DUE TO LACK OF COORDINATION OR TO MEET AUTHORITY HAVING JURISDICTION AND INSURANCE CARRIER REQUIREMENTS AT NO ADDITIONAL COST TO THE OWNER.
9. FORWARD COMPLETED CERTIFICATE OF COMPLETION AND CONTRACTOR MATERIAL TEST CERTIFICATES TO THE OWNER.
10. REFER TO SPECIFICATIONS FOR ADDITIONAL INFORMATION.

NIKE MINIMUM DESIGN REQUIREMENTS

OCCUPANCY CLASSIFICATION	DENSITY	HOSE ALLOWANCE (GPM)	MAXIMUM SPRINKLER SPACING (SQ.FT.)	DESIGN BASIS
STOCKROOM	0.45/2000 SQ. FT.	500	100	GROUP A PLASTICS ON MULTIPLE ROW RACKS TO 10'-0"; NFPA 13 TABLE 17.2.1.2.1(a) Note 2; CARTONED, EXPOSED, NON-EXPANDED; DECK HEIGHT 18'-2". CEILING SPRINKLERS ONLY. PROVIDE MINIMUM K 11.2 SPRINKLERS.
SALES AREA	0.30/2500 SQ. FT.	500	100	OWNER ELECTED DENSITY. DESIGN BASIS IS FMDS 3-26 TABLE 2 SPRINKLER DESIGN DEMANDS FOR HAZARD CATEGORIES. GROUP A PLASTICS ON BACK-TO-BACK SHELF TO 8'-0"; CARTONED, EXPOSED, NON-EXPANDED; DECK HEIGHT 19'-1". PROVIDE MINIMUM K 11.2 SPRINKLERS.
RESTROOMS/OFFICES/FITTING ROOMS	0.10/1500 SQ. FT.	100	225	LIGHT HAZARD; NFPA 13: 11.2.3.2 AND TABLE 11.2.3.1.2. USE QUICK RESPONSE SPRINKLERS.
MECHANICAL/ELECTRICAL ROOMS	0.15/1500 SQ. FT.	250	225	ORDINARY HAZARD GROUP 1; NFPA 13: 11.2.3.2 AND TABLE 11.2.3.1.2. USE QUICK RESPONSE SPRINKLERS.
STORAGE ROOMS	0.20/1500 SQ. FT.	250	225	ORDINARY HAZARD GROUP 2; NFPA 13: 11.2.3.2 AND TABLE 11.2.3.1.2. USE QUICK RESPONSE SPRINKLERS.

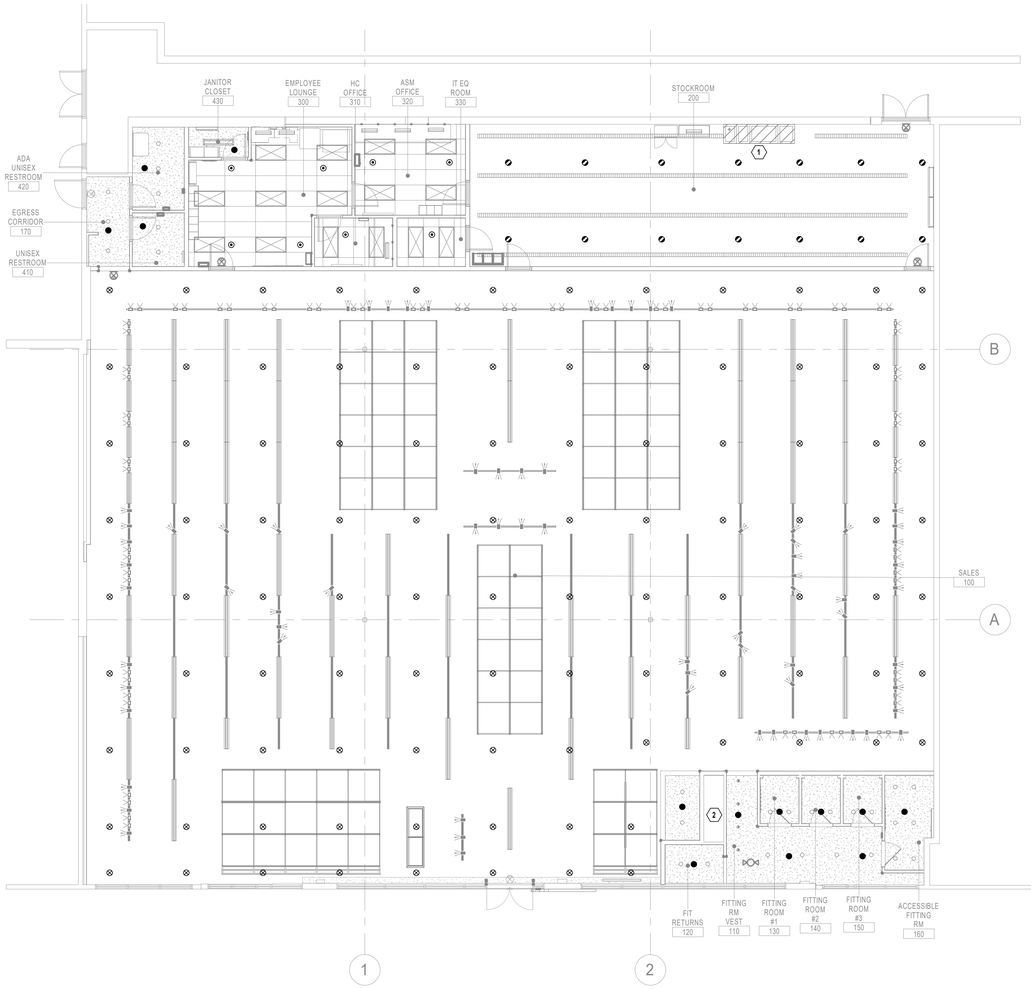

1 FIRE PROTECTION PLAN
1/8" = 1'-0"

0 4' 8' 12'
SCALE: 1/8"=1'-0"

FIRE SPRINKLER SYMBOLS

THIS IS A MASTER LEGEND AND NOT ALL SYMBOLS OR ABBREVIATIONS ARE USED.

ABBREVIATIONS

V2.02

AFF	ABOVE FINISHED FLOOR	NIC	NOT IN CONTRACT
AFG	ABOVE FINISHED GRADE	OC	ON CENTER
CD	CANDELA	PIV	POST INDICATOR VALVE
DI	DUCTILE IRON	PROVIDE	FURNISH AND INSTALL
ESFR	EARLY SUPPRESSION FAST RESPONSE	PRV	PRESSURE REDUCING VALVE
ETR	EXISTING TO REMAIN	RD	RETURN DUCT
FHC	FIRE HOSE CABINET	REV	REVISION
FP	FIRE PROTECTION	SD	SUPPLY DUCT
GC	CONTRACTOR	SF	SQUARE FEET
GPM	GALLONS PER MINUTE	TYP	TYPICAL
JBU-BOX	JUNCTION BOX	UNO	UNLESS NOTES OTHERWISE
MAX	MAXIMUM	V	VOLT(S)
MIN	MINIMUM	W	WATTS
N/A	NOT APPLICABLE	WP	WEATHERPROOF

ANNOTATION

1 FIRE SPRINKLER PLAN NOTE CALLOUT

CONNECTION POINT OF NEW WORK TO EXISTING

1 / F1 DETAIL REFERENCE UPPER NUMBER INDICATES DETAIL NUMBER LOWER NUMBER INDICATES SHEET NUMBER

1 / F1 SECTION CUT DESIGNATION

FIRE SPRINKLERS

SYMBOL	SIZE	TYPE	FINISH	MAKE/ MODEL	STYLE	K-FACTOR
	1"	QR	BRASS	TYCO	UPRIGHT	MIN 11.2
	1/2"	QR	BRASS	TYCO	UPRIGHT	5.6
	1"	QR	CHROME	TYCO	PENDENT	MIN 11.2
	1/2"	QR	CHROME	TYCO	RECESSED PENDENT	5.6
	1/2"	QR	WHITE	TYCO	CONCEALED PENDENT	5.6

FIRE SPRINKLER PIPING

- FP — FIRE PROTECTION (FP)
- SHUTOFF VALVE
- CHECK VALVE
- BACKFLOW PREVENTER
- CAP
- ELBOW UP
- ELBOW DOWN
- TEE UP
- TEE DOWN
- FIRE DEPARTMENT CONNECTION
- FIRE PUMP TEST HEADER
- INSPECTOR'S TEST CONNECTION / AUXILIARY DRAIN
- SPRINKLER RISER
- TOP BEAM CLAMP
- TRAPEZE HANGER

LINETYPE LEGEND

THROUGHOUT THE DRAWINGS DIFFERENT LINETYPES ARE USED IN COMBINATION WITH THE SYMBOLS TO INDICATE THE STATUS OF ITEMS AS EXISTING, TO BE DEMOLISHED, TO BE INCLUDED AS PART OF NEW WORK AND/OR ITEMS WHICH ARE ANTICIPATED TO BE PROVIDED IN THE FUTURE. THE STATUS OF ITEMS USING THESE LINETYPES ARE RELATIVE TO THE VIEW IN WHICH THEY APPEAR. PHASING SHOWN IN DRAWINGS IS NOT INTENDED TO FULLY DESCRIBE ALL NECESSARY CONSTRUCTION PHASING, WHICH IS DETERMINED BY THE CONTRACTOR AS PART OF THEIR RESPONSIBILITIES. ANY SUCH PHASES DESCRIBED IN THE CONSTRUCTION DOCUMENTS ARE GENERAL AND ONLY INTENDED TO INDICATE A BROAD ORDER FOR THE SAKE OF DESCRIBING THE PROJECT. THE FOLLOWING LINETYPES MAY BE USED ON ANY DEVICE, EQUIPMENT, NOTE, LINE, SHAPE, ETC.

EXISTING	NEW
DEMOLISH	FUTURE

FIRE SPRINKLER PLAN NOTES

1 DO NOT ROUTE SPRINKLER PIPING ABOVE ELECTRICAL DISTRIBUTION EQUIPMENT.
2 NONCOMBUSTIBLE, CONCEALED SPACE. SPRINKLER PROTECTION NOT REQUIRED PER NFPA 13.

Architect:

brr

ARCHITECT OF RECORD:
BRR ARCHITECTURE, INC
8131 METCALF AVE
SUITE 300
OVERLAND PARK, KS 66204

www.brrarch.com

TEL: 913-262-9595
FAX: 913-262-9564

COPYRIGHT NOTICE

This drawing was prepared for use on a specific site contemporaneously with its issue date and it is not suitable for use on a different project site or at a later time. Use of this drawing for reuse on another project or on another project requires the services of properly licensed architects and engineers. Reproduction of this drawing for reuse on another project is not authorized and may be contrary to the law.

Engineer:

HENDERSON ENGINEERS
8345 LENEXA DRIVE, SUITE 300
LENEXA, KS 66214
TEL 913.742.5000 FAX 913.742.5001
WWW.HENDERSONENGINEERS.COM
2050003713
FL CORPORATE NO. EB 7606
EXPIRES 2/28/2021

Project Owner:

NIKE, Inc.
One Bowerman Drive
Beaverton, OR 97005
(503) 671-6453
www.nike.com

Project Address:

NIKE FACTORY STORE
WATERFORD LAKES SHOPPING CENTER
449 N. ALAFAYA TRAIL
ORLANDO, FL 32828
TEMPLATE ISSUE DATE: 11/26/2018

Fixture Package:

UNITE

Stamp:

THIS DOCUMENT IS RELEASED FOR THE PURPOSE OF PRELIMINARY SUBMITTAL
CHRISTOPHER J. CULP
LICENSE # 63559

IT IS NOT TO BE USED FOR CONSTRUCTION PURPOSES

CHRISTOPHER J. CULP
LICENSE # 63559

Issued For:

PERMIT/BID

Issue Date:

11/06/2020

Revisions:

NO.	REASON	DATE

PROJECT MANAGER: KH
CHECKED BY:
DRAWN BY: Author

Project Number:

62301411

Sheet Title:

FIRE SPRINKLER PLAN

Sheet Number:

FS1.0

CHRISTOPHER J. CULP

15C: AUTOMATIC SPRINKLER SYSTEM

1. GENERAL INSTRUCTIONS

A. GENERAL REQUIREMENTS

Requirements under Division 01 and the general and supplementary conditions of these specifications shall apply to this section and division. Where the requirements of this section and division exceed those of Division 01, this section and division take precedence. Become thoroughly familiar with all its contents as to requirements that affect this division, section, or both. Work required under this division includes all material, equipment, appliances, transportation, services, and labor required to complete the entire system as required by the drawings and specifications, or reasonably inferred to be necessary to facilitate the function of each system as implied by the design and the equipment specified.

The specifications and drawings for the project are complementary, and any portion of work described in one shall be provided as if described in both. In the event of discrepancies, notify the Engineer and request clarification prior to proceeding with the work involved.

Drawings are graphic representations of the work upon which the contract is based. They show the materials and their relationship to one another, including sizes, shapes, locations, and connections. They convey the scope of work, indicating the intended general arrangement of the systems without showing all of the exact details as to elevations, offsets, control lines, and other installation requirements. Use the drawings as a guide when laying out the work and to verify that materials and equipment will fit into the designated spaces, and which when installed per manufacturers' requirements, will ensure a complete, coordinated, satisfactory, and properly operating system.

Refer to Division 15B Plumbing for additional requirements that apply to this installation that are not written herein.

B. DEFINITIONS

Furnish: "to supply and deliver to the project site, ready for unloading, unpacking, assembly, installation and similar operations."

Install: "to perform all operations at the project site including, but not limited to, the actual unloading, unpacking, assembling, erecting, placing, anchoring, applying, working to dimension, finishing, curing, protecting, cleaning, testing, commissioning, starting up and similar operations, complete, and ready for the intended use."

Provide: "to furnish and install, complete and ready for the intended use."

Furnished by Owner (or Owner-Furnished) or Furnished by Others: "an item furnished by the Owner or under other divisions or contracts, and installed under the requirements of this division, complete and ready for the intended use, including all items and services incidental to the work necessary for proper installation and operation. Include the installation under the warranty required by this division."

Engineer: Where referenced in this division, "Engineer" is the Engineer of Record and the Design Professional for the work under this division, and is a consultant to, and an authorized representative of the Architect, as defined in the General and/or Supplementary Conditions. When used in this division, Engineer means increased involvement by and obligations to the Engineer, in addition to involvement by and obligations to the Architect.

AHJ: The local code and/or inspection agency (Authority) Having Jurisdiction over the work.

NRTL: Nationally recognized testing laboratory, as defined and listed by OSHA in 29 CFR 1910.7 (e.g., UL, ETL, CSA), and acceptable to the AHJ over this project. Nationally recognized testing laboratories and standards listed are used only to represent the characteristics required and are not intended to restrict the use of other NRTLs that are acceptable to the AHJ and standards that meet the specified criteria.

The terms "approved equal", "equivalent", or "equal" are used synonymously and shall mean "accepted by or acceptable to the Engineer as equivalent to the item or manufacturer specified". The term "approved" shall mean labeled, listed, or both, by an NRTL, and acceptable to the AHJ over this project.

C. PREBID SITE VISIT

Prior to submitting bid, visit the site of the proposed work and become fully informed as to the conditions under which the work is to be done. Failure to comply with this requirement shall not be considered sufficient justification to request or obtain extra compensation over and above the contract price.

D. MANUFACTURERS

In other articles where lists of manufacturers are introduced, subject to compliance with requirements, provide products by one of the manufacturers specified.

Where a list is provided, manufacturers are listed alphabetically and not in accordance with any ranking or preference.

Where manufacturers are not listed, provide products subject to compliance with requirements from manufacturers that have been actively involved in manufacturing the specified product for no less than 5 years.

E. COORDINATION

Coordinate the connection of the fire sprinkler alarm devices to the fire alarm system or fire sprinkler monitoring panel as required.

Coordinate work with that of other trades so that the various components of the systems are installed at the proper time, will fit the available space, and will allow proper service access to those items requiring maintenance. Components installed without regard to the above shall be relocated at no additional cost to the Owner.

F. SUBMITTALS

Assemble and submit for review shop drawings, material lists, manufacturer product literature for equipment to be furnished, and items requiring coordination between contractors under this contract. Provide submittals in sufficient detail so as to demonstrate compliance with these Contract Documents and the design concept. Prior to transmitting submittal, verify that the equipment submitted is mutually compatible and suitable for the intended use, will fit the available space, and maintain manufacturer recommended service clearances. If the size of equipment furnished makes necessary any change in location or configuration, submit a shop drawing showing the proposed layout.

Transmit submittals as early as required to support the project schedule. Allow for two weeks Engineer review time, plus to/from mailing time via the Architect, plus a duplication of this time for resubmittal if required. Only resubmit those sections requested for resubmittal.

Submittals shall contain the project name, applicable specification section, submittal date, equipment identification acronym as used on the drawings, and the Contractor's stamp. The stamp shall certify that the submittal has been checked by the Contractor, complies with the drawings and specifications, and is coordinated with other trades. Manufacturer product literature shall include shop drawings, product data, performance sheets, samples and other submittals required by this division. Highlight, mark, list, or indicate the materials, performance criteria, and accessories that are being proposed. General product catalog data not specifically noted to be part of the specified product will be rejected and returned without review.

Shop drawings shall meet the requirements of NFPA 13 for working level drawings and shall include the following:

1. Working plans per NFPA 13, including layout drawings of the complete overhead sprinkler system that indicates the relationship of sprinkler piping and sprinklers to all other overhead items, including ceiling grid and tiles, light fixtures, diffusers, registers, grilles, ductwork, structure, soffits, obstructions, etc. Location of risers, piping, etc., shall be as inconspicuous as possible and shall fulfill all functional requirements. System design capabilities and demand shall also be noted on the drawings.

2. Complete details and sections as required to clearly define and clarify the design, including a materials list describing all proposed materials by manufacturer's name and catalog number.

3. Hydraulic calculations.

4. Product data for all fire sprinkler system components. Clearly indicate components to be used where multiple components appear on the same cut sheet.

Where required by the AHJ, Contractor is responsible for obtaining a professional engineer or NICET stamp and signature on their shop drawing submittal. The Engineer is not responsible and will not provide this.

Submittals and shop drawings shall not contain the firm name, logo, seal, or signature of the Engineer. They shall not be copies of the work product of the Engineer. If the Contractor desires to use elements of such product, refer to paragraph "Electronic Drawing Files" for procedures to be used.

Separate submittals according to individual specification sections. Illegible submittals will be rejected and returned without review. Shop drawings shall be produced using Computer Aided Design. Hand drawn documents will not be reviewed or approved. Catalog data shall be properly bound, identified, indexed and tabbed in a 3-ring binder. Each item or model number shall be clearly marked and accessories indicated. Label the catalog data with the equipment identification acronym or number as used on the drawings and include performance curves, capacities, sizes, weights, materials, finishes, wiring diagrams, electrical requirements and deviations from specified equipment or materials. For equipment with motor starters or VFDs, include short circuit current ratings. Mark out inapplicable items. Shop drawings will be returned without review if the above mentioned requirements are not met.

Provide the quantity of submittals required by Division 01. If not indicated and hard-copy sets are provided, submit a minimum of six (6) copies. Refer to Division 01 for acceptance of electronic submittals for this project. For electronic submittals, Contractor shall submit the documents in accordance with the procedures specified in Division 01. Contractor shall notify the Architect and Engineer that the submittals have been posted. If electronic submittal procedures are not defined in Division 01, Contractor shall include the website, user name and password information needed to access the submittals. For submittals sent by e-mail, Contractor shall copy the designated representatives of the Architect and Engineer. Contractor shall allow the Engineer review time as specified above in the construction schedule. Contractor shall submit only the documents required to purchase the materials and/or equipment in the electronic submittal.

The checking and subsequent approval of such shop drawings by the Engineer shall not relieve the Contractor from responsibility for errors in dimensions, details, size of members, quantities, omissions of components or fittings; coordination of electrical requirements; or for coordinating items with actual building conditions. Proceed with the procurement and installation of equipment only after receiving approved shop drawings relative to each item.

G. ELECTRONIC DRAWINGS

In preparation of shop drawings or record drawings, Contractor may, at his option, obtain electronic drawing files in AutoCAD or DXF format on CD-ROM disk, DVD disk, flash drive, or direct download, as desired, from the Engineer for a fee of $200 for a drawing set up to 12 sheets and $15 per sheet for each additional sheet. Contact the Architect for written authorization and Engineer for the necessary release agreement form and to specify shipping method and drawing format. In addition to payment, written authorization from the Architect and release agreement from the Engineer must be received before electronic drawing files will be sent.

H. RECORD DRAWINGS (AS-BUILT DRAWINGS)

During progress of the work in this division, Contractor shall maintain an accurate record of all changes made during the installation of the system. Upon completion of the work, accurately transfer all record information to three identical sets of the approved shop drawings. Insert one set into each copy of the manual described below.

See Division 01 and General Conditions for additional information.

I. OPERATION AND MAINTENANCE INSTRUCTIONS

During the course of construction, collect and compile a complete brochure of equipment furnished and installed on this project. Include operational and maintenance instructions, manufacturer's catalog sheets, wiring diagrams, parts lists, approved submittals and shop drawings, warranties, and descriptive literature as furnished by the equipment manufacturer. Include an inside cover sheet that lists the project name, date, Owner, Architect, Engineer, General Contractor, Sub-Contractor, and an index of contents.

Submit three copies of literature bound in approved binders with index and tabs separating equipment types to the Architect, for Engineer's review, at the termination of the work. Paper clips, staples, rubber bands, loose-leaf binding, and mailing envelopes are not considered approved binders. Final approval of systems installed under this contract shall be withheld until this equipment brochure is received and deemed complete by the Architect and Engineer. Instruct workmen to save required literature shipped with the equipment itself for inclusion in this brochure.

Literature shall contain the following items:

1. Identification clearly visible on or through the cover, the name of the project, and description "Fire Sprinkler System Manual".

2. Neatly typed index at front with all emergency information clearly identified.

3. Complete list of all system components with manufacturer's names, catalog numbers, and all data for ordering parts.

4. One copy of the record drawings as described above.

5. All information required to secure emergency repairs or service.

6. Test reports and certificates including "Contractor's Material and Test Certificate(s) for Underground Piping" and "Contractor's Material and Test Certificate(s) for Above Ground Piping" as described in NFPA 13.

Refer to Division 01 for acceptance of electronic manuals for this project. For electronic manuals, refer to paragraph "Submittals" for requirements.

J. WARRANTIES

Warrant each system and each element thereof against all defects due to faulty workmanship, design, or material for a period of 12 months from date of Substantial Completion, unless specific items are noted to carry a longer warranty in the construction documents or manufacturer's standard warranty exceeds 12 months. Remedy all defects, occurring within the warranty period(s), as stated in the General Conditions and Division 01.

Warranties shall include labor and material, including travel expenses. Make repairs or replacements without any additional costs to the Owner, and to the satisfaction of the Owner, Architect, and Engineer.

Perform the remedial work promptly, upon written notice from the Engineer or Owner.

At the time of Substantial Completion, deliver to the Owner all warranties, in writing and properly executed, including term limits for warranties extending beyond the one year period, each warranty instrument being addressed to the Owner and stating the commencement date and term.

K. SCOPE

Modify the existing wet-pipe, automatic fire sprinkler system for the area of work as shown on the drawings. Contractor shall be approved and state licensed for design and installation of fire protection systems. The work done under this section shall be performed only by a Contractor whose workmen are experienced and regularly engaged in the installation of fire protection systems. Contractor shall be capable of preparing hydraulic calculations and system layouts.

Provide all fire sprinkler alarm devices including waterflow alarm and valve tamper switches for all system control valves. Coordinate all wiring and conduit for a complete and functional installation.

System shall, at a minimum, be in accordance with the latest edition of NFPA 13, Underwriters Laboratories (UL), and must be acceptable to the Owner's Insurer, the AHJ, and all applicable local, state and national codes and standards. Where the contract documents exceed the requirements of the referenced codes, standards, etc., the contract documents shall take precedence.

Work shall include, but shall not necessarily be limited to the following:

1. Design and installation of a complete wet-pipe, automatic fire sprinkler system for the area of work shown on the drawings or specified herein.

2. Portions of systems subject to freezing or temperatures below 40 degrees F shall be protected against freezing as required by NFPA 13. The Contractor shall be responsible for repairs and all costs incurred from damage caused by freezing of the fire protection system.

L. SYSTEM DESIGN

Contractor shall verify design criteria and rating hazards with the Owner's Insurer prior to designing the system. Waterflow and pressure test data shall be acquired before system is calculated and be dated not more than 12 months prior to the submittal of sprinkler shop drawings. Arrangements for and cost of flow tests shall be the responsibility of the Contractor.

Submit hydraulic calculations and plan, including a supply and demand graph; all hydraulic reference points and area of application shall appear on the plan. Contractor shall verify with AHJ any minimum safety factor requirements. Demand shall not be less than 10 percent below the supply at the demand point.

Refer to sheet FS1.0 protection criteria legend for sprinkler design criteria.

The Contractor shall be fully responsible for the hydraulic calculations, the final system design, and the layout of all components of the system as required for approval by the Owner's Insurer and the AHJ.

The Contractor shall be fully responsible for coordinating system layout with other contractors. Changes to system design due to lack of coordination shall be paid for by this Contractor.

Designs requiring cutting of structural members for passage of sprinkler pipes or hangers shall not be accepted. When design appearance or similar aspects require cutting due to economy, it shall be held to an absolute minimum and done only with the Architect and Structural Engineer's written approval. Any excessive requirements of this type shall be identified during the bid period.

Sprinkler spacing shall conform to NFPA 13. Extended coverage sprinklers shall not be used in unfinished (shell) spaces.

The hydraulic area of operation shall not be reduced as allowed by NFPA 13 for areas utilizing quick response sprinklers.

2. MATERIALS AND INSTALLATION

A. PRODUCTS

All fire protection system components shall be Underwriter's Laboratories listed for their intended use.

B. PIPING AND COMPONENTS

Sprinkler piping 2-1/2 inch and larger shall be Schedule 10 or Schedule 40 black steel. Sprinkler piping 2 inch and smaller shall be Schedule 40. Pipes shall have welded, threaded, or mechanically joined fittings, based on the pipe material and size per NFPA 13 requirements.

Acceptable alternatives to Schedule 10 and Schedule 40 pipe shall be manufactured to standards recognized by NFPA 13. Pipe shall have a corrosion resistance rating of 1.0 or greater. Crimp-type couplings are not permitted. Threadable thinwall pipe with corrosion resistance rating less than 1.0 is not permitted.

All piping on the exterior of the building and/or exposed to the elements shall be externally galvanized.

C. SPRINKLERS

Sprinklers in areas with gypsum board ceilings shall be one of the following:
1. Fully concealed type with white cover plates.

Sprinklers in areas with suspended acoustical ceilings shall be one of the following:
1. Chrome–plated, recessed type with chrome-plated escutcheons.

Sprinklers in areas with exposed piping may be pendent or upright types with rough brass finish.

Provide quick response sprinklers in all light hazard areas.

3. EXECUTION

A. PIPING AND FINISHES

Conceal piping in areas having ceilings, other than the underside of the roof deck. Piping in areas without ceilings may be exposed but kept at a minimum distance from the deck. All piping shall be clean and free of rust. Install system such that all piping is rigidly secured and supported. All ductwork, lights, structural members and main runs of piping shall take precedence over sprinkler piping. Cutting of structural members for passage of sprinkler pipes or hangers shall not be permitted. All horizontal piping in ceiling space shall be at an elevation above the top of light fixtures and air outlets to allow for access to light fixtures and air outlets without removing horizontal piping. Route all sprinkler piping and provide all offsets, bends, and elbows around all mechanical, electrical, and structural members as required.

Where exposed piping passes through finish work, install chrome plated (or other finish acceptable to the architect) split wall plates or escutcheons to fit snugly around the piping. Provide at each penetration to assure effectiveness of construction as a fire stop where piping is concealed or installed in unfinished areas.

All openings for piping shall be anticipated and indicated on the approved shop drawings. Any additional cutting of openings must have the written approval of the Architect.

Route piping parallel to major building lines.

Installation shall allow for suitable drainage of system to meet with the approval of the AHJ. Provide access panels as required. All drain locations requiring access panels shall be approved by the Architect prior to installation.

Sprinklers in suspended ceilings shall be 1 foot from the grid in both directions or centered in ceiling tiles. Sprinkler locations in finished areas shall be approved by Architect prior to installation.

B. PENETRATIONS

Seal all fire protection floor, wall and roof penetrations watertight and weathertight. Caulk around fire protection penetrations with 3M CP-25, or approved equal fire barrier caulk (thickness as required and recommended by manufacturer) to maintain fire resistance rating of fire-rated assemblies.

C. TESTING AND ACCEPTANCE

Complete the automatic fire sprinkler system, as soon as possible, when building construction allows. Following system installation, Place the system in service. After the system has been placed in service for continuous use, water charges, if any, will be paid by Owner.

Upon completion of the systems installation, and prior to acceptance by the Engineer and Owner, this Contractor shall make general operating tests to demonstrate that all equipment and systems are in proper working order, and are functioning in conformance with the intent of the drawings and specifications.

Test above ground piping in accordance with NFPA 13. Hydrostatically test all sprinkler piping at a minimum pressure of 200 psi for a minimum 2-hour period of time. Correct any faulty or leaking joints and pipe. The use of any substance or material added to the water to correct leaks shall not be permitted. Caulking of defective joints, cracks or holes shall not be permitted. Repeat tests after defects have been eliminated. Perform all tests in the presence of the AHJ and/or the Owner's authorized representative.

Upon completion of each phase of the installation, test each system in conformance with local code requirements. Furnish all labor and equipment required to properly test all sprinkler equipment installed under this contract. Assume all costs involved in making the tests and repair and/or replace all damage resulting therefrom.

Notify the Architect and the AHJ three (3) working days prior to making sprinkler system tests. Concealed work shall remain uncovered until the required tests are complete. Portions of the work may be concealed if approved by the AHJ or if necessary due to construction procedure.

D. INSTRUCTIONS

After completion of all installation, tests, etc., and prior to the final acceptance date, instruct the building Owner and his selected personnel in the operation of the sprinkler system. Include in the training the procedure to conduct quarterly main drain tests as required by NFPA 25. Special care shall be taken to make sure the building personnel will immediately recognize whether the main valve is in an open position, know how to drain the system, and know how to test the system. The building personnel shall also be made familiar with the existence and contents of the System Manual described in the Operation and Maintenance section of this specification.

END OF SECTION 15C

Architect:

brr

ARCHITECT OF RECORD:
BRR ARCHITECTURE, INC
8131 METCALF AVE
SUITE 300
OVERLAND PARK, KS 66204

www.brrarch.com

TEL: 913-262-9095
FAX: 913-262-9044

COPYRIGHT NOTICE

This drawing was prepared for use on a specific site contemporaneously with its issue date and it is not suitable for use on a different project site or at a later time. Use of this drawing on another project or on another project requires the services of properly licensed architects and engineers. Reproduction of this drawing for reuse on another project is not authorized and may be contrary to the law.

Engineer:

HENDERSON ENGINEERS
8345 LENEXA DRIVE, SUITE 300
LENEXA, KS 66214
TEL 913.742.5000 FAX 913.742.5001
WWW.HENDERSONENGINEERS.COM
2050003713
FL CORPORATE NO: EB 7606
EXPIRES 2/28/2021

Project Owner:

NIKE, Inc.
One Bowerman Drive
Beaverton, OR 97005
(503) 671-6453
www.nike.com

Project Address:

NIKE FACTORY STORE
WATERFORD LAKES SHOPPING CENTER
449 N. ALAFAYA TRAIL
ORLANDO, FL 32828
TEMPLATE ISSUE DATE: 11/26/2018

Fixture Package:

UNITE

Stamp:

THIS DOCUMENT IS RELEASED FOR THE PURPOSE OF PRELIMINARY SUBMITTAL
CHRISTOPHER J. CULP
LICENSE # 63559

IT IS NOT TO BE USED FOR CONSTRUCTION PURPOSES

CHRISTOPHER J. CULP
LICENSE # 63559

Issued For:

PERMIT/BID

Issue Date:

11/06/2020

Revisions:

NO.	REASON	DATE

PROJECT MANAGER:
KH

CHECKED BY:

DRAWN BY:
Author

Project Number:

62301411

Sheet Title:

FIRE SPRINKLER SPECIFICATIONS

Sheet Number:

FS2.0

CHRISTOPHER J. CULP

MECHANICAL SYMBOLS

THIS IS A MASTER LEGEND AND NOT ALL SYMBOLS OR ABBREVIATIONS ARE USED.

V2.01

STANDARD MOUNTING HEIGHT

THERMOSTATS (USER ADJUSTABLE)(TOP OF DEVICE)	48"
CONTROLS (TOP OF DEVICE)	48"

USE THE DEFAULT MOUNTING HEIGHTS SHOWN ABOVE UNLESS NOTED OTHERWISE IN THE SPECIFICATIONS OR ELSEWHERE. MOUNTING HEIGHTS LISTED ARE ABOVE FINISHED FLOOR (AFF) OR ABOVE FINISHED GRADE (AFG) TO TOP OF DEVICE. ALL DEVICES SHALL BE INSTALLED IN COMPLIANCE WITH CURRENT ADA AND LOCAL REQUIREMENTS.

ANNOTATION

Symbol	Description
1	MECHANICAL PLAN NOTE CALLOUT
CU / 1	MECHANICAL EQUIPMENT DESIGNATION (CONTRACTOR FURNISHED AND INSTALLED UNLESS NOTED OTHERWISE)
	CONNECTION POINT OF NEW WORK TO EXISTING
1 / M1	DETAIL REFERENCE. UPPER NUMBER INDICATES DETAIL NUMBER LOWER NUMBER INDICATES SHEET NUMBER
1 / M1	SECTION CUT DESIGNATION

ABBREVIATIONS

A/C	AIR CONDITIONING
ACC	AIR COOLED CHILLER
ACCU	AIR COOLED CONDENSING UNIT
AFC	ABOVE FINISHED CEILING
AFF	ABOVE FINISHED FLOOR
AFG	ABOVE FINISHED GRADE
AHJ	AUTHORITY HAVING JURISDICTION
AHU	AIR HANDLING UNIT
AI	ANALOG INPUT
AO	ANALOG OUTPUT
AP	ACCESS PANEL
APD	AIR PRESSURE DROP
AWG	AMERICAN WIRE GAUGE
B	BOILER
BAS	BUILDING AUTOMATION SYSTEM
BB	BACKBONE
BD	BACKDRAFT DAMPER
BD	BLOWDOWN
BFC	BELOW FINISHED CEILING
BFF	BELOW FINISHED FLOOR
BFG	BELOW FINISHED GRADE
BFP	BOILER FEED PUMP
BHP	BRAKE HORSEPOWER
BI	BINARY INPUT
BO	BINARY OUTPUT
BOD	BOTTOM OF DUCT
BOS	BOTTOM OF STRUCTURE
BTU	BRITISH THERMAL UNIT
CFM	CUBIC FEET PER MINUTE
CH	CHILLER
CLG	COOLING
CP	CONDENSATE PUMP
CPT	CONTROL POWER TRANSFORMER
CRAC	COMPUTER ROOM AIR CONDITIONING UNIT
CRU	COMPUTER ROOM UNIT
CT	COOLING TOWER
CV	CONTROL VALVE
CWP	CONDENSER WATER PUMP
CU	CONDENSING UNIT
CHWP	CHILLED WATER PUMP
DB	DECIBELS
DBA	DECIBEL AVERAGE
DDC	DIRECT DIGITAL CONTROL
DI	DIGITAL INPUT
DISC	DISCONNECT
DN	DOWN
DS	DUCT SILENCER
DX	DIRECT EXPANSION
(E)	EXISTING
EA	EXHAUST AIR
EAT	ENTERING AIR TEMPERATURE
ED	EXHAUST DUCT
EDB	ENTERING DRY BULB
EF	EXHAUST FAN
EFF	EFFICIENCY
EMS	ENERGY MANAGEMENT SYSTEM
ESP	EXTERNAL STATIC PRESSURE
ETR	EXISTING TO REMAIN
EWB	ENTERING WET BULB
EWT	ENTERING WATER TEMPERATURE
FCU	FAN COIL UNIT
FFA	FROM FLOOR ABOVE
FFB	FROM FLOOR BELOW
FF	FINISHED FLOOR
FPI	FINS PER INCH
FPM	FEET PER MINUTE
GC	GENERAL CONTRACTOR
GPM	GALLONS PER MINUTE
HOA	HAND-OFF-AUTOMATIC
HP	HORSEPOWER
HTG	HEATING
HWP	HEATING WATER PUMP
IN WC	INCHES OF WATER COLUMN
L	LOUVER
LAT	LEAVING AIR TEMPERATURE
LDB	LEAVING DRY BULB
LP	LOW PRESSURE
LWB	LEAVING WET BULB
LWT	LEAVING WATER TEMPERATURE
MAU	MAKE-UP AIR UNIT
MAX	MAXIMUM
MBH	1000 BTU PER HOUR
MD	MOTORIZED DAMPER
MFR	MANUFACTURER
MIN	MINIMUM
N/A	NOT APPLICABLE
N/C	NORMALLY CLOSED
N/O	NORMALLY OPEN
NOM	NOMINAL
NC	NOISE CRITERIA
NF	NON-FUSED
NIC	NOT IN CONTRACT
OA	OUTSIDE AIR
PICV	PRESSURE INDEP. CONTROL VALVE
PROVIDE	FURNISH AND INSTALL
QTY	QUANTITY
RA	RETURN AIR
RC	ROOM CRITERIA
RD	RETURN DUCT
REA	RELIEF AIR
RF	RETURN FAN
RFR	REFRIGERANT
RH	RELATIVE HUMIDITY
RH	ROOF HOOD
RPM	REVOLUTIONS PER MINUTE
RTU	ROOFTOP UNIT
SA	SUPPLY AIR
SCP	STEAM CONDENSATE PUMP
SD	SMOKE DUCT DETECTOR
SD	SUPPLY DUCT
SF	SUPPLY FAN
SH	SENSIBLE HEAT CAPACITY
SOW	SCOPE OF WORK
SP	STATIC PRESSURE
ST	STEAM TRAP
STM	STEAM
TBD	TO BE DETERMINED
TC/C	TEMPERATURE CONTROLS CONTRACTOR
TCP	TEMPERATURE CONTROL PANEL
TF	TRANSFER FAN
TFA	TO FLOOR ABOVE
TFB	TO FLOOR BELOW
TH	TOTAL HEAT CAPACITY
TSP	TOTAL STATIC PRESSURE
TT	TEMPERATURE TRANSMITTAL
TYP	TYPICAL
U/F	UNDERFLOOR
U/G	UNDERGROUND
U/S	UNDERSLAB
UH	UNIT HEATER
UNO	UNLESS NOTED OTHERWISE
VAV	VARIABLE AIR VOLUME
VEL	VELOCITY
VFD	VARIABLE FREQUENCY DRIVE
VRF	VARIABLE REFRIGERANT FLOW
VRV	VARIABLE REFRIGERANT VOLUME
W/	WITH
W/O	WITHOUT
WB	WET BULB
WC	WATER COLUMN
WPD	WATER PRESSURE DROP
XP	EXPLOSION PROOF

HVAC DUCTWORK AND ACCESSORIES

- LINEAR SLOT DIFFUSER
- INSULATED FLEXIBLE DUCT (MAX. 5'-0" LONG)
- BRANCH DUCT WITH 45° RECTANGLE-ROUND BRANCH FITTING AND MANUAL VOLUME DAMPER
- ELBOW WITH TURNING VANES
- BRANCH DUCT WITH BELL-MOUTH FITTING & MANUAL VOLUME CONTROL DAMPER
- RETURN, EXHAUST, OR OUTSIDE AIR DUCT UP
- RETURN, EXHAUST, OR OUTSIDE AIR DUCT DOWN
- SUPPLY AIR DUCT UP
- SUPPLY AIR DUCT DOWN
- EQUIPMENT WITH FLEXIBLE DUCT CONNECTION
- 10" (NECK SIZE)
CSD-1 (TYPE)
300 CFM (CFM OF SUPPLY DIFFUSER OR REGISTER)
- 24x24 (NECK SIZE)
CEG-1 (TYPE)
800 CFM (CFM OF EXHAUST GRILLE)
- MANUAL VOLUME DAMPER
- SQUARE TO ROUND TRANSITION
- RD — DUCT MOUNTED SMOKE DETECTOR (SD=SUPPLY/RD=RETURN)
- # — RISER DESIGNATION
- FD — FIRE DAMPER
- FSD — FIRE SMOKE DAMPER
- SD — SMOKE DAMPER
- VD — VOLUME DAMPER
- MD — MOTORIZED DAMPER
- BD — BACKDRAFT DAMPER

ALL DUCT DIMENSIONS SHOWN ON DRAWINGS ARE INSIDE DIMENSIONS. REFER TO DUCTWORK SPECIFICATIONS FOR DUCTWORK INSULATION AND LINER INFORMATION.

HVAC CONTROL DEVICES

Symbol	Description
H	HUMIDISTAT
T	THERMOSTAT
SP	STATIC PRESSURE SENSOR
TS	TEMPERATURE SENSOR
CO	CARBON MONOXIDE SENSOR
CO2	CARBON DIOXIDE SENSOR
DP	DIFFERENTIAL PRESSURE SENSOR
FS	FLOW SWITCH
HS	HUMIDITY SENSOR
PS	PULL STATION

PIPING SYMBOLS

- DIRECTION OF FLOW
- CONTROL VALVE
- THREE-WAY CONTROL VALVE
- SHUTOFF VALVE
- CHECK VALVE
- BALANCING VALVE WITH PRESSURE PORTS
- TRIPLE DUTY VALVE WITH PRESSURE PORTS
- STRAINER
- STRAINER WITH BLOWDOWN VALVE
- RELIEF / SAFETY VALVE
- SOLENOID VALVE
- PRESSURE REDUCING VALVE
- GAS PRESSURE REGULATOR
- THERMOSTATIC MIXING VALVE
- PA — PIPE ANCHOR
- EJ — EXPANSION JOINT
- PIPE GUIDE
- PIPING SUPPORT
- F & T TRAP
- BUCKET TRAP
- THERMOSTATIC TRAP
- BACKFLOW PREVENTER
- PRESSURE GAUGE
- THERMOMETER
- PRESSURE AND TEMPERATURE TEST PLUG
- UNION
- FLANGE CONNECTION
- VACUUM RELIEF VALVE
- AV — AUTOMATIC AIR VENT
- MV — MANUAL AIR VENT
- PRESSURE / VACUUM SWITCH
- CLEANOUT
- CAP
- ELBOW UP
- ELBOW DOWN
- TEE UP
- TEE DOWN
- ELBOW UP WITH SHUT-OFF VALVE (SOV)
- ELBOW DOWN WITH SHUT-OFF VALVE (SOV)
- TEE UP WITH SHUT-OFF VALVE (SOV)
- TEE DOWN WITH SHUT-OFF VALVE (SOV)
- REDUCER
- RECIRCULATION PUMP
- P-TRAP
- GAS COCK
- TOP BEAM CLAMP
- TRAPEZE HANGER

PIPING LINETYPES

Line label	Description
CD	CONDENSATE DRAIN (CD)
ACD	AUXILIARY CONDENSATE DRAIN (ACD)
NPW	NON-POTABLE WATER (NPW)
G	NATURAL GAS (G)
G	NATURAL GAS ON ROOF (G)
MPG	MEDIUM PRESSURE NATURAL GAS (MPG)
MPG	MEDIUM PRESSURE NATURAL GAS ON ROOF (MGP)
FOS	FUEL OIL SUPPLY (FOS)
FOR	FUEL OIL RETURN (FOR)
FOV	FUEL OIL VENT (FOV)
LPG	LIQUEFIED PETROLEUM GAS (LPG)
BFW	BOILER FEED WATER (BFW)
HPS	HIGH PRESSURE STEAM SUPPLY (HPS)
HPC	HIGH PRESSURE STEAM CONDENSATE (HPC)
MPS	MEDIUM PRESSURE STEAM SUPPLY (MPS)
MPC	MEDIUM PRESSURE STEAM CONDENSATE (MPC)
LPS	LOW PRESSURE STEAM SUPPLY (LPS)
LPC	LOW PRESSURE STEAM CONDENSATE (LPC)
PD	CONDENSATE PUMP DISCHARGE (PD)
HWS	HEATING HOT WATER SUPPLY (HWS)
HWR	HEATING HOT WATER RETURN (HWR)
CHWS	CHILLED WATER SUPPLY (CHWS)
CHWR	CHILLED WATER RETURN (CHR)
HCS	HOT / CHILLED WATER SUPPLY (HCS)
HCR	HOT / CHILLED WATER SUPPLY (HCR)
CWS	CONDENSER WATER SUPPLY (CWS)
CWR	CONDENSER WATER RETURN (CWR)
HPWS	HEAT PUMP WATER SUPPLY (HPWS)
HPWR	HEAT PUMP WATER RETURN (HPWR)
RL	REFRIGERANT LIQUID (RL)
RD	REFRIGERANT DISCHARGE (HOT GAS) (RD)
RS	REFRIGERANT SUCTION (RS)
RDB	REFRIGERANT DISCHARGE BYPASS (RDB)
RV	REFRIGERANT VENT (RV)

LINETYPE LEGEND

THROUGHOUT THE DRAWINGS DIFFERENT LINETYPES ARE USED IN COMBINATION WITH THE SYMBOLS TO INDICATE THE STATUS OF ITEMS AS EXISTING, TO BE DEMOLISHED, TO BE INCLUDED AS PART OF NEW WORK AND/OR ITEMS WHICH ARE ANTICIPATED TO BE PROVIDED IN THE FUTURE. THE STATUS OF ITEMS USING THESE LINETYPES ARE RELATIVE TO THE VIEW IN WHICH THEY APPEAR. PHASING SHOWN IN DRAWINGS IS NOT INTENDED TO FULLY DESCRIBE ALL NECESSARY CONSTRUCTION PHASING, WHICH IS DETERMINED BY THE CONTRACTOR AS PART OF THEIR RESPONSIBILITIES. ANY SUCH PHASES DESCRIBED IN THE CONSTRUCTION DOCUMENTS ARE GENERAL AND ONLY INTENDED TO INDICATE A BROAD ORDER FOR THE SAKE OF DESCRIBING THE PROJECT. THE FOLLOWING LINETYPES MAY BE USED ON ANY DEVICE, EQUIPMENT, NOTE, LINE, SHAPE, ETC.

EXISTING	NEW
DEMOLISH	FUTURE

MECHANICAL GENERAL NOTES:

1. PRIOR TO SUBMITTING BID, VISIT THE JOB SITE AND BECOME FULLY ACQUAINTED WITH THE EXISTING CONDITIONS OF THE PROJECT. REVIEW THE GENERAL NOTES, SPECIFICATIONS AND OTHER DRAWINGS FOR ADDITIONAL REQUIREMENTS WHICH MAY NOT BE SPECIFICALLY CALLED OUT IN THIS PORTION OF THE CONSTRUCTION DOCUMENTS. NOTIFY ARCHITECT, ENGINEER AND/OR OWNER OF CONFLICTS OR DISCREPANCIES PRIOR TO SUBMISSION OF BID.
2. EXISTING CONDITIONS WERE TAKEN FROM ORIGINAL DRAWINGS AND SITE VISITS AND MAY NOT REFLECT EXACT "AS-BUILT" CONDITIONS. FIELD VERIFY EXISTING CONDITIONS PRIOR TO SUBMITTING FINAL BIDS. COORDINATE NEW WORK AND DEMOLITION WITH OTHER DISCIPLINES AND EXISTING CONDITIONS PRIOR TO CONSTRUCTION.
3. COORDINATE THE INSTALLATION OF THE MECHANICAL SYSTEMS WITH OTHER TRADES TO ENSURE A NEAT AND ORDERLY INSTALLATION. INSTALL DUCTWORK AND PIPING AS TIGHT TO STRUCTURE AS POSSIBLE. COORDINATE WITH OTHER TRADES TO AVOID CONFLICTS. COORDINATE INSTALLATION OF DUCTWORK AND PIPING TO AVOID CONFLICTS WITH ELECTRICAL PANELS, LIGHTING FIXTURES, ETC. ANY MODIFICATIONS REQUIRED DUE TO LACK OF COORDINATION WILL BE THE RESPONSIBILITY OF THE CONTRACTOR AT NO EXTRA COST TO THE OWNER.
4. WHERE SHUTDOWN OF EXISTING SYSTEMS IS REQUIRED DURING NEW WORK, COORDINATE SHUTDOWN TIME AND DURATION WITH THE OWNER TO MINIMIZE DOWNTIME. NOTIFY OWNER SEVEN (7) DAYS PRIOR TO INTERRUPTION OF SERVICE.
5. DURING INSTALLATION OF NEW WORK, AVOID DAMAGING EXISTING SURFACES AND EQUIPMENT TO REMAIN. REPAIR DAMAGE CAUSED DURING CONSTRUCTION AT NO EXTRA COST TO THE OWNER.
6. PROVIDE TEMPORARY BARRIERS TO CONTAIN DUST AND DEBRIS RESULTING FROM THE PERFORMANCE OF THE WORK TO THE AREA WHERE WORK IS BEING PERFORMED.
7. ALL MECHANICAL EQUIPMENT SHOWN ON THE MECHANICAL PLANS SHALL BE PROVIDED BY DIVISION 23 UNLESS OTHERWISE NOTED.
8. NEW MECHANICAL EQUIPMENT, DUCTWORK AND PIPING ARE SHOWN AT APPROXIMATE LOCATIONS. FIELD MEASURE FINAL DUCTWORK AND PIPING LOCATIONS PRIOR TO FABRICATION AND MAKE ADJUSTMENTS AS REQUIRED TO FIT THE DUCTWORK AND PIPING WITHIN THE AVAILABLE SPACE. VERIFY THAT FINAL EQUIPMENT LOCATIONS MEET MANUFACTURER'S RECOMMENDATIONS REGARDING SERVICE CLEARANCE AND PROPER AIRFLOW CLEARANCE AROUND EQUIPMENT.
9. REFER TO ARCHITECTURAL DRAWINGS FOR RELATED CONSTRUCTION DETAILS AS APPLICABLE TO THE HVAC SYSTEM. VERIFY CHASES AND PENETRATIONS SHOWN ON ARCHITECTURAL DRAWINGS THAT ARE INTENDED FOR DUCTWORK AND PIPING MEET REQUIREMENTS.
10. COORDINATE LOCATION OF ROOF MOUNTED HVAC EQUIPMENT AND ROOF PENETRATIONS WITH THE ARCHITECTURAL AND STRUCTURAL DRAWINGS.
11. INDOOR AIR QUALITY MEASURES: PROTECT INSIDE OF (INSTALLED AND DELIVERED) DUCTWORK AND HVAC UNITS FROM EXPOSURE TO DUST, DIRT, PAINT AND MOISTURE. REPLACE INSULATION THAT HAS BECOME WET AT ANY TIME DURING CONSTRUCTION, DRYING THE INSULATION IS NOT ACCEPTABLE. SEAL ANY TEARS OR JOINTS OF INTERNAL FIBERGLASS INSULATION. REMOVE DEBRIS FROM CEILING/RETURN AIR PLENUM INCLUDING DUST. AN INDEPENDENT, PROFESSIONAL DUCT CLEANING COMPANY SHALL VACUUM CLEAN ANY DUCTWORK CONNECTED TO HVAC UNITS THAT WERE OPERATED DURING THE CONSTRUCTION PERIOD AFTER NEW FILTERS ARE INSTALLED AND PRIOR TO TURNING SYSTEM OVER TO THE OWNER. THE INTERNAL SURFACES AND ASSOCIATED COILS OF ANY HVAC UNITS THAT WERE OPERATED SHALL ALSO BE CLEANED.
12. INSTALL DUCTWORK AND PIPING PARALLEL TO BUILDING COLUMN LINES UNLESS OTHERWISE SHOWN OR NOTED.
13. OVERHEAD HANGERS AND SUPPORTS FOR EQUIPMENT, DUCTWORK AND PIPING SHALL BE FASTENED TO BUILDING JOISTS OR BEAMS. DO NOT ATTACH HANGERS AND SUPPORTS TO THE ABOVE FLOOR SLAB OR ROOF EXCEPT WHERE CONCRETE INSERTS IN CONCRETE SLABS ARE ALLOWED BY THE SPECIFICATIONS.
14. COORDINATE LOCATION OF EQUIPMENT SUPPORTS WITH LOCATION OF EQUIPMENT ACCESS PANELS/DOORS TO ENABLE SERVICE OF EQUIPMENT AND/OR FILTER REPLACEMENT.
15. SEAL PENETRATIONS THROUGH THE BUILDING COMPONENTS IN ACCORDANCE WITH THE CONTRACT SPECIFICATIONS. FIREPROOF PENETRATIONS THROUGH FIRE RATED COMPONENTS IN ACCORDANCE WITH U.L. REQUIREMENTS.
16. COORDINATE THE EXACT MOUNTING SIZE AND FRAME TYPE OF DIFFUSERS, REGISTERS AND GRILLES WITH THE SUPPLIER TO MEET THE CEILING, WALL AND DUCT INSTALLATION REQUIREMENTS.
17. ADJUST LOCATION OF CEILING DIFFUSERS, REGISTERS AND GRILLES AS REQUIRED TO ACCOMMODATE FINAL CEILING GRID AND LIGHTING LOCATIONS.
18. LOCATE AND SET THERMOSTATS AND HUMIDISTATS AT LOCATIONS SHOWN ON PLANS. VERIFY EXACT LOCATIONS WITH ARCHITECT PRIOR TO INSTALLATION. INSTALL DEVICES WITH TOP OF DEVICE AT MAXIMUM 48" AFF TO MEET ADA REQUIREMENTS UNLESS NOTED OTHERWISE ON PLANS. PROVIDE INSULATED BACKING FOR THERMOSTATS MOUNTED ON EXTERIOR BUILDING WALLS. INSTALL WIRING IN CONDUIT PROVIDED BY DIVISION 26. AT A MINIMUM, PROVIDE CONDUIT IN THE WALL FROM THE JUNCTION BOX TO 6" ABOVE THE CEILING.
19. COORDINATE THE LOCATION AND ELEVATION OF WALL-MOUNTED DEVICES WITH PRESENTATION BOARDS, DISPLAY CABINETS, SHELVES OR OTHER COMPONENTS SHOWN ON THE ARCHITECTURAL DRAWINGS THAT ARE TO BE INSTALLED UNDER OTHER DIVISIONS. CONTRACTOR WILL NOT BE REIMBURSED FOR RELOCATION OF WALL-MOUNTED DEVICES CAUSED BY A LACK OF COORDINATION.
20. PROVIDE A MANUAL BALANCING DAMPER IN EACH DUCT TAKEOFF FROM SUPPLY, RETURN, OUTDOOR AND EXHAUST AIR DUCTS.
21. PROVIDE A PREFABRICATED 45 DEGREE, HIGH EFFICIENCY, RECTANGULAR/ROUND BRANCH DUCT TAKEOFF FITTING FOR BRANCH DUCT CONNECTIONS AND TAKE-OFFS TO INDIVIDUAL DIFFUSERS, REGISTERS AND GRILLES. PROVIDE WITH INTEGRAL MANUAL BALANCING DAMPER AND LOCKING QUADRANT WHERE INDICATED ON PLANS.
22. BRANCH DUCTWORK TO AIR OUTLETS SHALL BE SAME SIZE AS OUTLET NECK SIZE UNLESS OTHERWISE NOTED.
23. REFER TO SPECIFICATIONS FOR DUCTWORK AND PIPING INSULATION REQUIREMENTS. DUCT SIZES ON MECHANICAL PLANS INDICATE CLEAR INSIDE AIRFLOW DIMENSIONS, INCREASE SHEET METAL SIZES ACCORDINGLY TO ACCOUNT FOR THICKNESS OF DUCT LINER.
24. FLEXIBLE DUCTWORK SHALL NOT EXCEED 5'-0" IN LENGTH AND SHALL BE INSTALLED AND SUPPORTED TO AVOID SHARP BENDS AND SAGGING. REFER TO SPECIFICATIONS FOR ADDITIONAL REQUIREMENTS.
25. PROVIDE WALL MOUNTED LOUVERS AND DAMPERS WITH SUITABLE MOUNTING FRAM TO MATCH WALL CONSTRUCTION. COORDINATE WITH ARCHITECTURAL DRAWINGS.
26. PROVIDE A NEW SET OF AIR FILTERS IN UNITS PRIOR TO TESTING, ADJUSTING AND BALANCING AND BEFORE TURNING SYSTEM(S) OVER TO OWNER.

MECHANICAL DEMOLITION GENERAL NOTES:

1. COORDINATE ALL DEMOLITION WITH WHAT IS SHOWN ON ARCHITECTURAL PLANS. NOTIFY ARCHITECT OF ANY DISCREPANCIES.
2. PRIOR TO SUBMITTING BID, VISIT THE JOB SITE AND BECOME FULLY ACQUAINTED WITH THE EXISTING CONDITIONS OF THE PROJECT. REVIEW GENERAL NOTES, SPECIFICATIONS AND OTHER DRAWINGS FOR ADDITIONAL REQUIREMENTS THAT MAY NOT BE SPECIFICALLY CALLED OUT IN THIS PORTION OF THE CONSTRUCTION DOCUMENTS. NOTIFY ARCHITECT, ENGINEER OR OWNER, AS DEFINED IN BID DOCUMENTS, OF CONFLICTS OR DISCREPANCIES PRIOR TO SUBMISSION OF BID.
3. OWNER RETAINS RIGHTS OF SALVAGE FOR EQUIPMENT AND FIXTURES TO BE REMOVED. COORDINATE WITH OWNER THE EQUIPMENT AND FIXTURES TO BE SALVAGED AND THE LOCATION FOR STORAGE. AVOID DAMAGE TO SALVAGED EQUIPMENT, FIXTURES AND DEVICES DURING DEMOLITION WORK AND DURING TRANSPORT TO OWNER'S DESIGNATED STORAGE LOCATION.
4. REMOVE ITEMS SHOWN HEAVY-LINED DASHED, AND/OR NOTED TO BE REMOVED.
5. AVOID DAMAGING EXISTING SURFACES AND EQUIPMENT TO REMAIN FOR NEW INSTALLATION. REPAIR DAMAGE CAUSED DURING WORK AT NO EXTRA COST TO THE OWNER.
6. SEAL PENETRATIONS THROUGH FLOORS, WALLS, CEILINGS AND ROOFS WHERE MECHANICAL COMPONENTS ARE REMOVED AND WHERE THE EXISTING PENETRATION IS NOT USED FOR THE NEW INSTALLATION. REPAIR DAMAGED SURFACES TO MATCH ADJACENT AREAS OR AS INDICATED ON THE ARCHITECTURAL DRAWINGS.
7. REMOVE HANGERS AND SUPPORTS WHERE DUCTWORK, PIPING AND/OR EQUIPMENT ARE REMOVED AND THE EXISTING HANGERS AND SUPPORTS ARE NOT USED FOR THE NEW INSTALLATION.
8. INSTALL PERMANENT CAPS WHERE DUCTWORK AND PIPING IS REMOVED AND THE EXISTING TAPS ARE NOT USED FOR THE NEW INSTALLATION. WHERE DUCTWORK AND PIPING ARE REMOVED AND THE EXISTING TAPS WILL BE USED FOR THE NEW INSTALLATION, INSTALL TEMPORARY CAPS TO PROTECT THE INTERIOR SURFACES UNTIL NEW DUCTWORK AND PIPING ARE INSTALLED.
9. INSPECT EXISTING EQUIPMENT TO REMAIN TO VERIFY THAT EQUIPMENT IS OPERATING PROPERLY. NOTIFY OWNER OF DAMAGED AND/OR MALFUNCTIONING COMPONENTS.
10. WHERE SHUTDOWN OF EXISTING SYSTEMS IS REQUIRED DURING DEMOLITION, COORDINATE SHUTDOWN TIME AND DURATION WITH OWNER TO MINIMIZE DOWNTIME. NOTIFY OWNER SEVEN (7) DAYS PRIOR TO INTERRUPTION OF SERVICE.
11. CEASE WORK AND IMMEDIATELY NOTIFY THE OWNER SHOULD ANY HAZARDOUS MATERIALS BE ENCOUNTERED DURING THE PERFORMANCE OF THE WORK.
12. REMOVAL, RECOVERY, RECYCLING, AND DISPOSAL OF REFRIGERANT, CONTAINED IN ANY EQUIPMENT TO BE REMOVED, SHALL BE PERFORMED IN STRICT ACCORDANCE WITH CURRENT EPA GUIDELINES.

MECHANICAL EMS NOTES:

1. COORDINATE ALL CONTROLS, EQUIPMENT ACCESSORIES, AND ASSOCIATED WORK WITH EMS VENDOR PRIOR TO ALL EQUIPMENT PURCHASES AND INSTALLATION.
2. GENERAL CONTRACTOR IS RESPONSIBLE FOR COORDINATING WITH EMS VENDOR TO PROVIDE A FULLY FUNCTIONAL SYSTEM AT START-UP. FAILURE TO COORDINATE CONTROLS AND REQUIRED EQUIPMENT ACCESSORIES RESULTING IN MODIFICATIONS SHALL BE RESPONSIBILITY OF THE CONTACTOR AT NO EXTRA COST TO THE OWNER.
3. PROVIDE CARRIER ROOFTOP UNITS, AS APPLICABLE, WITH FACTORY INSTALLED BACNET OPEN BOARD CONTROLLER WITH SUPPLY AND OUTSIDE AIR TEMPERATURE SENSORS.
4. PROVIDE ALL MOTORIZED DAMPERS ON PLAN, AS APPLICABLE, TO BE ABLE TO CONNECT TO ACTUATOR PROVIDED BY EMS VENDOR. MOTORIZED DAMPERS SHALL BE ACCESSIBLE FROM WITHIN SPACE VIA DUCT ACCESS PANELS. REFER TO SPECIFICATIONS FOR MORE INFORMATION.
5. THERMOSTATS AND SENSORS SHALL BE FURNISHED BY EMS VENDOR AND INSTALLED BY DIVISION 26 CONTRACTOR UNLESS NOTED OTHERWISE.
6. OUTDOOR SENSOR ASSEMBLY FOR ECONOMIZER CONTROL IS PROVIDED BY EMS VENDOR. PROVIDE CHASE LARGE ENOUGH FOR 1/4" POLY TUBE AND (2) WIRE PULLS FOR EMS CONTROLS.

BRADLEY E. CHAMBON

Architect:

brr

ARCHITECT OF RECORD:
BRR ARCHITECTURE, INC
8131 METCALF AVE
SUITE 300
OVERLAND PARK, KS 66204

www.brrarch.com

TEL: 913-262-9095
FAX: 913-262-9044

COPYRIGHT NOTICE

This drawing was prepared for use on a specific site contemporaneously with its issue date and it is not suitable for use on a different project site or at a later time. Use of this drawing for reference or example on another project requires the services of properly licensed architects and engineers. Reproduction of this drawing for reuse on another project is not authorized and may be contrary to the law.

Engineer:

HENDERSON ENGINEERS
8345 LENEXA DRIVE, SUITE 300
LENEXA, KS 66214
TEL 913.742.5000 FAX 913.742.5001
WWW.HENDERSONENGINEERS.COM
2050003713
FL. CORPORATE NO: EB 7606
EXPIRES 2/28/2021

Project Owner:

NIKE, Inc.
One Bowerman Drive
Beaverton, OR 97005
(503) 671-6453
www.nike.com

Project Address:

NIKE FACTORY STORE
WATERFORD LAKES SHOPPING CENTER
449 N. ALAFAYA TRAIL
ORLANDO, FL 32828
TEMPLATE ISSUE DATE: 11/28/2018

Fixture Package:

UNITE

Stamp:

THIS DOCUMENT IS RELEASED FOR THE PURPOSE OF PRELIMINARY SUBMITTAL
BRADLEY E. CHAMBON
LICENSE # 82784

IT IS NOT TO BE USED FOR CONSTRUCTION PURPOSES

BRADLEY E. CHAMBON
LICENSE # 82784

Issued For:

PERMIT/BID

Issue Date:

11/06/2020

Revisions:

NO.	REASON	DATE

PROJECT MANAGER:
KH

CHECKED BY:

DRAWN BY:
Author

Project Number:

62301411

Sheet Title:

MECHANICAL LEGENDS AND GENERAL NOTES

Sheet Number:

M0.0

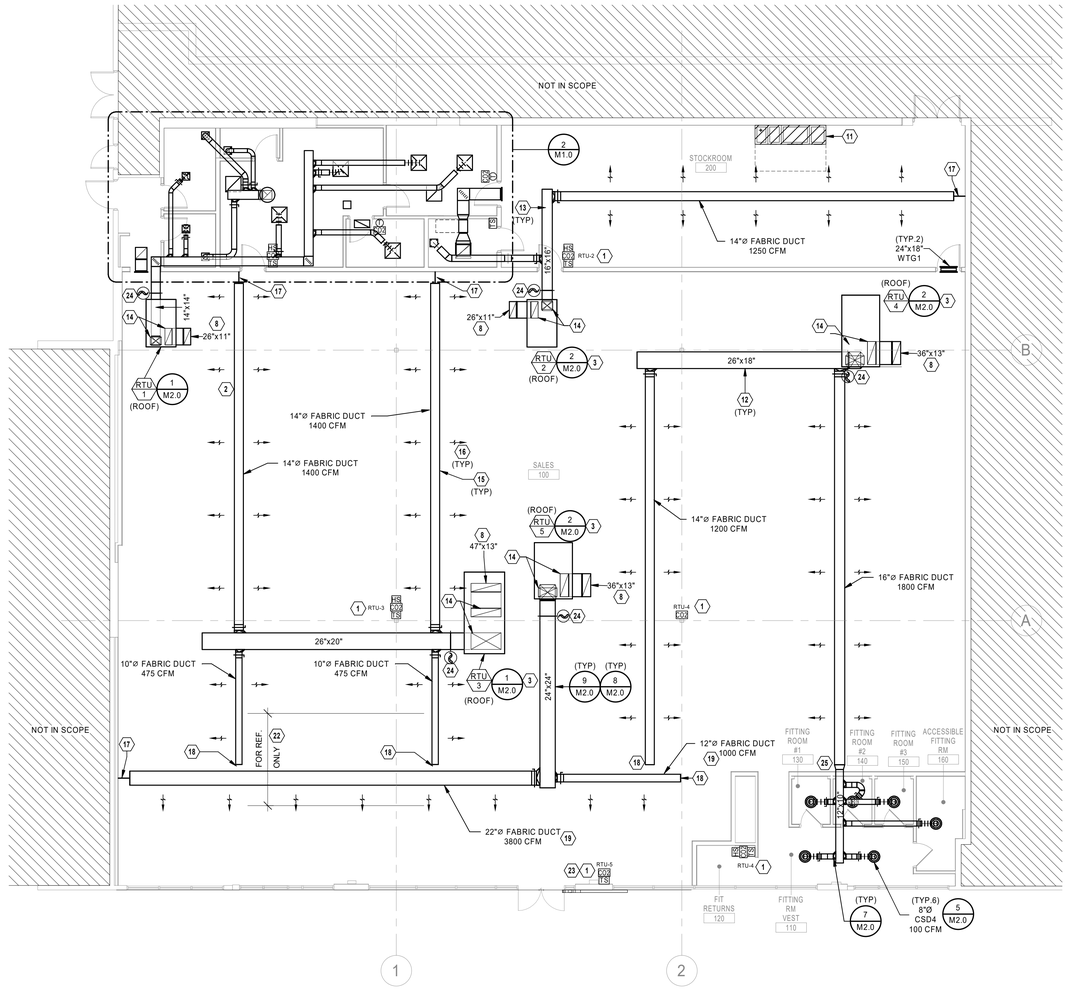

1 HVAC PLAN
1/8" = 1'-0"

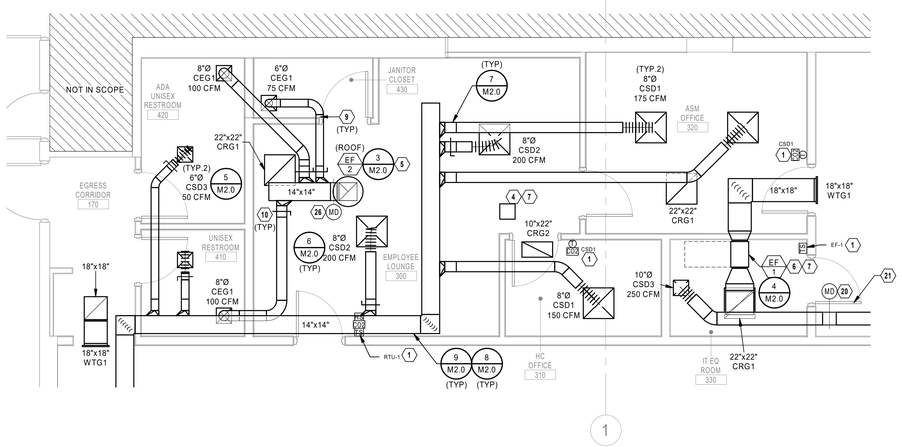

2 ENLARGED BACK OF HOUSE HVAC PLAN
1/4" = 1'-0"

MECHANICAL PLAN NOTES

1. THERMOSTATS AND SENSORS FURNISHED BY EMS VENDOR AND INSTALLED BY DIVISION 26 UNLESS NOTED OTHERWISE.
2. PROVIDE NEW ROOFTOP UNIT AS SCHEDULED WITH NEW CURB ADAPTER FROM NEW UNIT TO EXISTING CURB. PROVIDE A NEW SET OF MERV 13 AIR FILTERS IN UNIT BEFORE TURNING SYSTEM OVER TO OWNER.
3. PROVIDE NEW ROOFTOP UNIT AS SCHEDULED WITH EXISTING ROOF CURB. PROVIDE A NEW SET OF MERV 13 AIR FILTERS IN UNIT BEFORE TURNING SYSTEM OVER TO OWNER.
4. INSTALL VAV POWER MODULE FOR CONTROL OF OFFICE VAV DIFFUSERS IN AN ACCESSIBLE LOCATION ABOVE THE CEILING. DIVISION 28 CONTRACTOR SHALL PROVIDE 120V POWER TO MODULE. REFER TO ELECTRICAL DRAWINGS FOR DETAILS.
5. PROVIDE NEW ROOF-MOUNTED EXHAUST FAN AS SCHEDULED FOR GENERAL RESTROOM EXHAUST.
6. EXHAUST FAN SERVES TO PROVIDE TRANSFER AIR ONLY AND SHALL DISCHARGE AIR INTO THE STOCKROOM.
7. ACCESS TO HVAC EQUIPMENT SHALL BE FROM LAY-IN CEILING. NO CEILING DEVICES SHALL BE PLACED IN THIS LOCATION. COORDINATE FINAL INSTALLED LOCATION SUCH THAT THE HVAC EQUIPMENT REMAINS ACCESSIBLE. VERIFY NO OTHER PIPING, ELECTRICAL CONDUIT, STRUCTURE, AND/OR CEILING SUPPORTS IMPEDE ACCESS IN ANY WAY. INSTALL HVAC EQUIPMENT WITHIN 24" ABOVE CEILING FOR SERVICEABILITY.
8. ROUTE SHEET METAL RETURN AIR DUCT AS SHOWN WITH TERMINATION DIRECTED UPWARD. SIZE PLENUM FULL SIZE OF RETURN AIR INLET. PROVIDE DUCT LINER IN RETURN AIR DUCTWORK FOR SOUND ATTENUATION. COVER INLET WITH 1/2"X1/2" BIRD SCREEN.
9. ROUTE EXHAUST AIR DUCTWORK TO NEW ROOF MOUNTED EXHAUST FAN. COORDINATE EXACT ROUTING WITH STRUCTURE AND OTHER OBSTACLES. ADJUST ROUTING TO MATCH.
10. EXHAUST AIR DAMPERS SHALL BE ACCESSIBLE FROM BACK-OF-HOUSE LAY-IN CEILING. COORDINATE FINAL INSTALLED LOCATION SUCH THAT THE DAMPERS REMAIN ACCESSIBLE.
11. DO NOT ROUTE DUCTWORK OVER ELECTRICAL EQUIPMENT.
12. ROUTE DUCTWORK TIGHT TO STRUCTURE.
13. ROUTE DUCTWORK TIGHT TO STRUCTURE AND ABOVE THE STOCKROOM LIGHT FIXTURES.
14. ROUTE SUPPLY/RETURN DUCTWORK TO ROOF CURB PENETRATIONS. TRANSITION DUCTWORK IN RISER AS NECESSARY
15. INSTALL FABRIC DUCT DIRECTLY ABOVE ARCHITECTURAL LIGHTING GRID. REFER TO BOXED NOTES FOR ADDITIONAL INFORMATION.
16. ARROWS INDICATE DIRECTION OF AIRFLOW. PROVIDE VENTS ON FABRIC DUCT TO DIRECT AIRFLOW AS SHOWN.
17. EXTEND AND TIGHTEN HANGING CABLE TO WALL. GENERAL CONTRACTOR TO PROVIDE 2X WOOD BACKING. COORDINATE REQUIREMENTS WITH FABRIC DUCT MANUFACTURER.
18. FIELD FABRICATE L-BRACKET FOR SUPPORTING END OF FABRIC DUCT. COORDINATE REQUIREMENTS WITH FABRIC DUCT MANUFACTURER.
19. SUPPORT FABRIC DUCTWORK WITH MANUFACTURER'S DOUBLE-CABLE CROSS BRACING SUPPORTS. COORDINATE REQUIREMENTS WITH FABRIC DUCT MANUFACTURER.
20. INSTALL DAMPER AND ACTUATOR IN LOCATION INDICATED. DAMPER FURNISHED BY DIVISION 23. ACTUATOR FURNISHED BY EMS VENDOR.
21. LOUVERED DOOR FOR RELIEF AIR BY GENERAL CONTRACTOR. REFER TO ARCHITECTURAL DRAWINGS FOR MORE INFORMATION.
22. DO NOT INSTALL VENTS ON FABRIC DUCT ADJACENT TO BACKWRAP WALL. DIMENSION SHOWN FOR REFERENCE ONLY.
23. DO NOT INSTALL SENSORS ON WALL GRAPHICS. CONFIRM LOCATIONS OF SENSORS WITH PM PRIOR TO INSTALL.
24. SMOKE DETECTORS AND WIRING IN SUPPLY AND RETURN AIR DUCTS SHALL BE PROVIDED BY DIVISION 28 CONTRACTOR. SMOKE DETECTORS SHALL SHUT-DOWN UNIT UPON ALARM.
25. TRANSITION END OF FABRIC DUCT TO SHEET METAL DUCT. TRANSITION TO RECTANGULAR DUCT DIRECTLY BEFORE WALL PENETRATION. COORDINATE FABRIC DUCT LENGTH PRIOR TO ORDERING.
26

PROVIDE RFID DUCTWORK MESH OVER TRANSFER GRILLS BELOW 15'-0" AFF BETWEEN THE STOCKROOM AND THE SALES FLOOR, IF APPLICABLE. COORDINATE REQUIREMENTS WITH CONSTRUCTION PROJECT MANAGER.

INSTALL DUCTWORK AND PIPING AS TIGHT TO STRUCTURE AS POSSIBLE. COORDINATE WITH OTHER TRADES TO AVOID CONFLICTS. COORDINATE NSTALLATION OF DUCTWORK AND PIPING TO AVOID CONFLICTS WITH ELECTRICAL PANELS, LIGHTING FIXTURES, ETC. DO NOT INSTALL DUCTWORK BELOW THE BOTTOM OF THE LIGHT FIXTURES. NOTIFY CONSTRUCTION PROJECT MANAGER OF CONFLICTS.

FABRIC DUCT GENERAL NOTES:
PROVIDE FABRIC DUCT THROUGHOUT THE SPACE AS SHOWN ON PLAN. FABRIC DUCT SHALL NOT REPLACE RECTANGULAR DUCT DROPS OR EXHAUST DUCTS. BASIS OF DESIGN SHALL BE "PRIHODA", "MM" NONPOROUS FABRIC WITH "PERFORATIONS" (AIR OPENINGS) WITH ADJUSTABLE FLOW DEVICES (I.E. AFD'S) AT OPENINGS, AND ONE ROW, GALVANIZED CABLE. INTERNAL HOOP SUPPORT SYSTEM SHALL BE PROVIDED ON ALL FABRIC DUCT UNLESS NOTED OTHERWISE. INCLUDE ALL COMPONENTS AND ACCESSORIES REQUIRED TO MAKE A COMPLETE SYSTEM AS RECOMMENDED BY PRIHODA DURING BID PHASE, INCLUDING HANGING STRAPS AND CLIPS, END-CAPS, CONNECTIONS TO METAL DUCTS, ETC. PRIHODA FABRIC DUCT SHALL BE SIZED PER FACTORY RECOMMENDATIONS TO PROVIDE MINIMUM AIRFLOWS IN BRANCH DUCTS AS SHOWN. CONFIRM FABRIC DUCT COLOR WITH ARCHITECT PRIOR TO ORDERING ON ALL PROJECTS. (FOR GLOBAL 3.0 FIXTURE PACKAGE, PANTONE 420 - LIGHT GREY IS BASIS OF DESIGN). CONTACT PRIHODA SALES DEPARTMENT (E-MAIL: SALES@PRIHODA-NA.COM, PHONE: 1-855-774-4632) FOR PRICING INFORMATION.

FABRIC DUCT DESIGN GUIDELINE:
DISTRIBUTE AIRFLOW EVENLY ALONG FABRIC DUCT IN THE DIRECTION OF FLOW ARROWS. ORIENT AND SIZE FABRIC DUCT DIFFUSER OPENINGS TO PROVIDE A 50 FPM THROW VELOCITY HALF WAY TO THE NEAREST ADJACENT FABRIC DUCT OR TO THE NEAREST PARTITION/DEMISING WALL AS APPLICABLE. VENTS ON FABRIC DUCT SHALL BE LOCATED AT 22.5 DEGREES BELOW HORIZONTAL UNLESS NOTED OTHERWISE.

FABRIC DUCT COORDINATION NOTE:
DURING THE FIRST WEEK OF THE PROJECT, THE GENERAL CONTRACTOR'S SUPERINTENDENT, MECHANICAL SUB-CONTRACTOR, AND A REPRESENTATIVE FROM "PRIHODA" SHALL MEET AT THE PROJECT SITE FOR CONFIRMATION OF ALL FIELD DIMENSIONS AND POTENTIAL OBSTRUCTIONS. THIS EVENT MUST PRECEDE THE ORDERING OF ANY MATERIALS FROM "PRIHODA". CHANGE ORDERS AND EXPEDITING FEES WILL NOT BE APPROVED DUE TO LACK OF ON-SITE COLLABORATION AND/OR MEASUREMENT DURING SITE MEETING AT PROJECT COMMENCEMENT.

FABRIC DUCT INSTALLATION NOTE:
INSTALL FABRIC DUCT ABOVE ARCHITECTURAL LIGHTING SYSTEM. COORDINATE FABRIC DUCT INSTALLATION WITH GENERAL CONTRACTOR AND DIVISION 26. GENERAL CONTRACTOR SHALL VERIFY FABRIC DUCT IS INSTALLED SUCH THAT IT DOES NOT CLASH WITH ARCHITECTURAL LIGHTING SYSTEM, INCLUDING LIGHT FIXTURES, ARCHITECTURAL LIGHTING SYSTEM GRID AND SUSPENSION CABLES, OR ANY OTHER SUSPENDED FIXTURES WHEN DEFLATED.

THE DUCTWORK LAYOUT INDICATED ON THE DRAWINGS IS SCHEMATIC AND SHOWS DESIGNED INTENT ONLY. PRIOR TO FABRICATION AND INSTALLATION OF DUCTWORK, DIVISION 23 SHALL HAVE A QUALIFIED, EXPERIENCED SKETCHER PREPARE AND SUBMIT SHEET METAL SHOP DRAWINGS. SHOP DRAWINGS SHALL TAKE INTO ACCOUNT ALL EXISTING CONDITIONS, INCLUDING BUT NOT LIMITED TO, STRUCTURAL MEMBERS, CONDUITS AND PIPING TO REMAIN. SHOP DRAWINGS SHALL ALSO TAKE INTO ACCOUNT ALL NEW DESIGN CONDITIONS, INCLUDING BUT NOT LIMITED TO, STRUCTURAL MEMBERS, PIPING, CEILINGS, SOFFIT HEIGHTS, AND LIGHT FIXTURES.

SHOP DRAWINGS SHALL INDICATE ALL REVISIONS TO THE LAYOUT REQUIRED TO ACCOMMODATE THE EXISTING CONDITIONS AND/OR MAINTAIN THE CEILING HEIGHTS AND CLEARANCES REQUIRED. NOTIFY THE ARCHITECT AND ENGINEER OF ANY LOCATION WHERE THE DESIGN INTENT CANNOT BE MET PRIOR TO FABRICATION AND INSTALLATION OF DUCTWORK. REVISIONS TO DUCTWORK, EQUIPMENT, CONDUIT AND/OR PIPING REQUIRED BY CONTRACTOR'S FAILURE TO SUBMIT PROPERLY PREPARED SHOP DRAWINGS SHALL BE THE RESPONSIBILITY OF DIVISION 23 AT NO ADDITIONAL COST TO THE CLIENT OR DELAY TO THE PROJECT SCHEDULE.

GENERAL CONTRACTOR IS RESPONSIBLE FOR PROVIDING TO ARCHITECT, ENGINEER, LANDLORD, AND BUILDING OFFICIAL/INSPECTOR A FINAL TEST AND BALANCE REPORT PER THE SPECIFICATIONS. PROVIDE TEST AND BALANCE REPORT TO ARCHITECT, ENGINEER, AND LANDLORD PRIOR TO THE FINAL BUILDING INSPECTION.

LANDLORD REQUIREMENTS:
LANDLORD APPROVED ROOFING CONTRACTOR SHALL BE RESPONSIBLE FOR MAKING ALL CUTS THROUGH THE EXISTING ROOF, MODIFYING EXISTING OPENINGS, AND/OR ALTERING CURB FLASHING AT GENERAL CONTRACTOR'S EXPENSE. COORDINATE WITH GENERAL CONTRACTOR.

EMS CONTROLS:
CONTRACTORS ARE RESPONSIBLE FOR COORDINATING ALL EQUIPMENT CONTROLS WITH EMS VENDOR PRIOR TO PURCHASE AND INSTALLATION. CONTRACTORS SHALL COORDINATE WITH EMS VENDOR TO PROVIDE ALL NECESSARY EQUIPMENT AND ACCESSORIES FOR A FULLY FUNCTIONING SYSTEM.

TEMPERATURE CONTROLS:
EMS VENDOR SHALL FURNISH SENSORS AND CONTROL COMPONENTS AS INDICATED ON PLANS AND AS NECESSARY TO ACCOMPLISH THE INTENT OF THE DRAWINGS. ALL CONTROLS SHALL BE TIED INTO THE EMS SYSTEM UNLESS NOTED OTHERWISE.

GENERAL CONTRACTOR SHALL INSTALL CARRIER FURNISHED TEMPORARY THERMOSTATS AND FEED THE WIRING DOWN INTO THE SPACE FOR START UP AND CONTROL OF RTU(S) UNTIL THE EMS SYSTEM IS OPERABLE. REFER TO M3.0 FOR CARRIER CONTACT INFORMATION.

Architect:

brr

ARCHITECT OF RECORD:
BRR ARCHITECTURE, INC
8131 METCALF AVE
SUITE 300
OVERLAND PARK, KS 66204

www.brrarch.com

TEL: 913-262-9095
FAX: 913-262-9044

COPYRIGHT NOTICE

This drawing was prepared for use on a specific site contemporaneously with its issue date and it is not suitable for use on a different project site or at a later time. Use of this drawing on another project or on another project requires the services of properly licensed architects and engineers. Reproduction of this drawing for reuse on another project is not authorized and may be contrary to the law.

Engineer:

HENDERSON ENGINEERS
8345 LENEXA DRIVE, SUITE 300
LENEXA, KS 66214
TEL 913.742.5000 FAX 913.742.5001
WWW.HENDERSONENGINEERS.COM
2050003713
FL CORPORATE NO. EB 7606
EXPIRES 2/28/2021

Project Owner:

NIKE, Inc.
One Bowerman Drive
Beaverton, OR 97005
(503) 671-6453
www.nike.com

Project Address:

NIKE FACTORY STORE
WATERFORD LAKES SHOPPING CENTER
449 N. ALAFAYA TRAIL
ORLANDO, FL 32828
TEMPLATE ISSUE DATE: 11/26/2018

Fixture Package:

UNITE

Stamp:

THIS DOCUMENT IS RELEASED FOR THE PURPOSE OF PRELIMINARY SUBMITTAL
BRADLEY E. CHAMBON
LICENSE # 82784

IT IS NOT TO BE USED FOR CONSTRUCTION PURPOSES

BRADLEY E. CHAMBON
LICENSE # 82784

Issued For:

PERMIT/BID

Issue Date:

11/06/2020

Revisions:

NO.	REASON	DATE

PROJECT MANAGER: KH
CHECKED BY:
DRAWN BY: Author

Project Number:

62301411

Sheet Title:

MECHANICAL PLAN

Sheet Number:

M1.0

BRADLEY E. CHAMBON

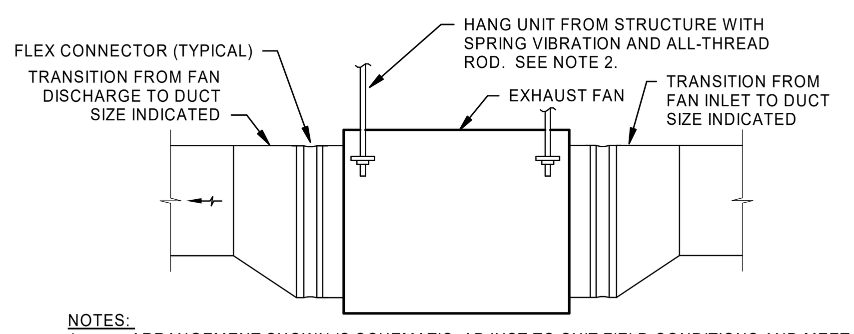

NOTES:
1. ARRANGEMENT SHOWN IS SCHEMATIC, ADJUST TO SUIT FIELD CONDITIONS AND MEET LOCAL CODE REQUIREMENTS.
2. FOR FANS 1 HP AND LESS, PROVIDE NEOPRENE RUBBER MOUNT HANGER (NR). FOR FANS LARGER THAN 1 HP, PROVIDE SPRING VIBRATION ISOLATION HANGER (SPNH).

(4) FAN INLINE
NTS

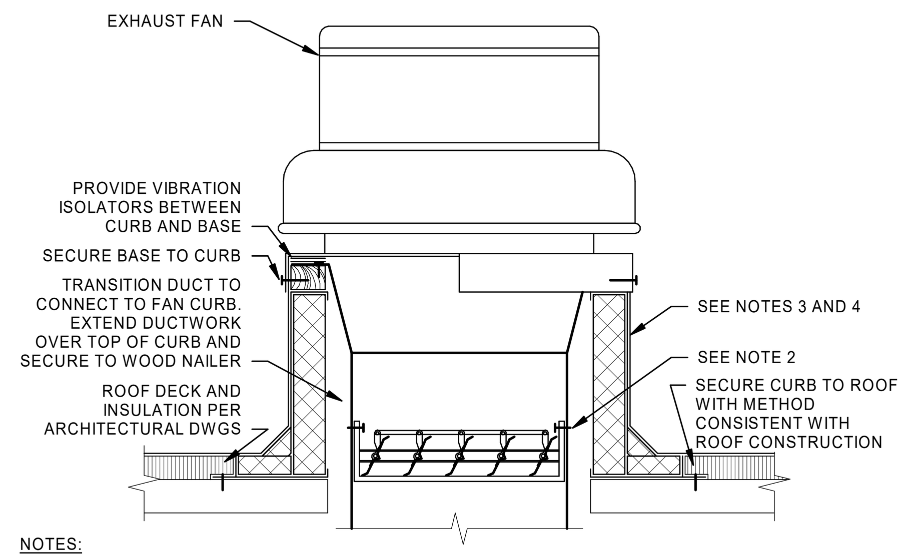

NOTES:
1. ARRANGEMENT SHOWN IS SCHEMATIC. ADJUST TO SUIT FIELD CONDITIONS AND MEET LOCAL CODE.
2. IF DAMPER IS SPECIFIED IN EQUIPMENT SCHEDULE, INSTALL INTEGRAL DAMPER AT BASE OF CURB AND SECURE FROM ABOVE TO ALLOW SERVICE THROUGH TOP OF CURB.
3. PREFABRICATED INSULATED ROOF CURB WITH TREATED WOOD NAILER, CANT, AND STEP AS REQUIRED TO ACCOMMODATE ROOF INSULATION. FRAME AND SECURE CURB TO ROOF WITH METHOD CONSISTENT WITH ROOF CONSTRUCTION. ROOF CURB SHALL BEAR ON ROOF STRUCTURE. REFER TO ARCHITECTURAL DRAWINGS AND CURB MANUFACTURER'S DETAILS FOR MORE INFORMATION.
4. FOR SLOPED ROOFS, PROVIDE CURB WITH DIMENSIONS CAPABLE OF COMPENSATING ROOF SLOPE TO ENSURE FAN IS INSTALLED LEVEL.

HIGH WIND STRAPPING: PROVIDE STAINLESS STEEL STRAPS OF LENGTH, WIDTH, THICKNESS, AND SPACING SUFFICIENT TO SECURE FAN TO CURB TO WITHSTAND WIND SPEED REQUIREMENTS PER LOCAL CODE. WRAP STRAPS OVER FAN AND SECURELY ATTACH TO OPPOSITE SIDE OF THE CURB.

(3) ROOF MOUNTED DOWNBLAST FAN DETAIL
NTS

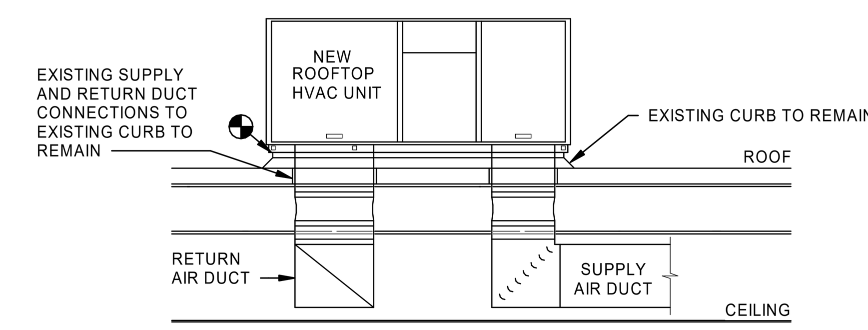

NOTES:
1. CURB SHALL INCLUDE ALL REQUIRED SUPPLY AND RETURN DUCT TRANSITIONS TO ENABLE THE NEW ROOFTOP TO BE INSTALLED WITHOUT NECESSITATING DUCT MODIFICATIONS BELOW THE ROOF.
2. INSTALL ROOFTOP UNIT IN A MANNER THAT ENSURES A WEATHER TIGHT INSTALLATION.

(2) ROOFTOP UNIT REPLACEMENT UTILIZING EXISTING CURB
NTS

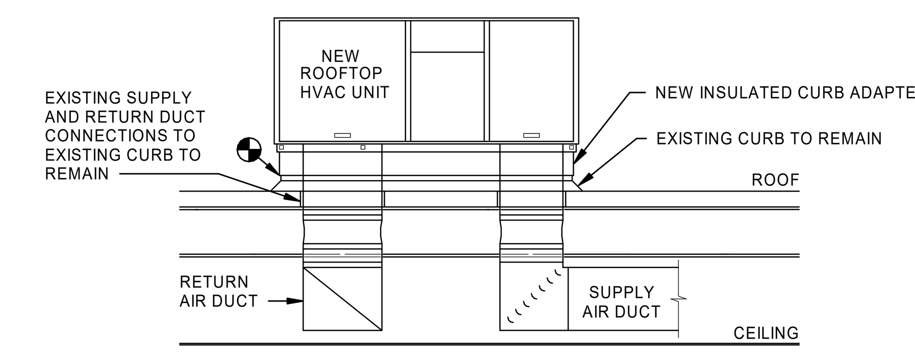

NOTES:
1. CURB ADAPTER SHALL INCLUDE ALL REQUIRED SUPPLY AND RETURN DUCT TRANSITIONS TO ENABLE THE NEW ROOFTOP TO BE INSTALLED WITHOUT NECESSITATING DUCT MODIFICATIONS BELOW THE ROOF.
2. INSTALL ADAPTER CURB AND ROOFTOP UNIT IN A MANNER THAT ENSURES A WEATHER TIGHT INSTALLATION.

(1) ROOFTOP UNIT REPLACEMENT UTILIZING ADAPTER CURB
NTS

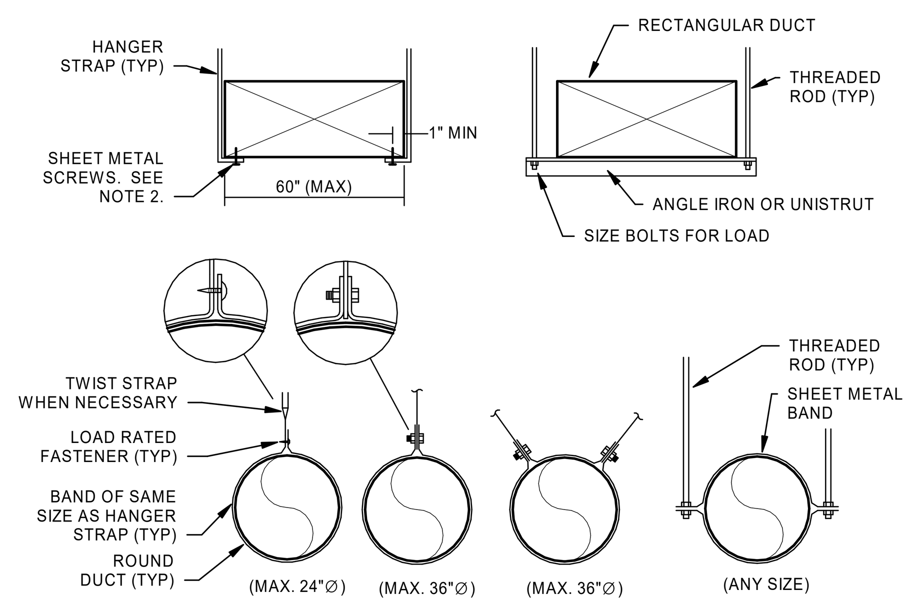

NOTES:
1. USE THREADED ROD FOR RECTANGULAR DUCTS LARGER THAN 60" WIDE.
2. OMIT SHEET METAL SCREWS IF HANGER STRAP IS CONTINUOUS AND LOOPS UNDER ENTIRE RECTANGULAR DUCT.
3. FOR ROUND DUCTS LARGER THAN 36"∅, USE TWO HANGER RODS TO SUPPORT DUCT FROM EACH SIDE.
4. HANGERS MUST NOT DEFORM DUCT SHAPE.

(8) DUCT HANGER LOWER ATTACHMENT DETAILS
NTS

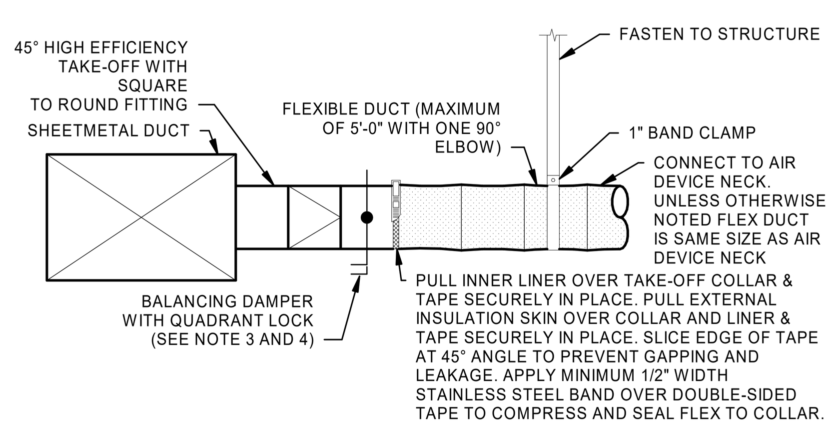

NOTES:
1. CUT OPENING IN SHEETMETAL DUCT ACCURATELY. INSTALL 45° LATERAL TO AVOID VISIBLE OPENINGS AND SECURE FITTING SUITABLY FOR PRESSURE CLASS.
2. INSTALL FLEXIBLE DUCT IN AS STRAIGHT A RUN AS POSSIBLE. USE LONG RADIUS BENDS WHERE POSSIBLE. PULL DUCT TIGHT AT BOTH ENDS AND SECURE BOTH INNER LINER & OUTER INSULATION SKIN WITH TAPE & METAL CLAMPS.
3. EXTEND DAMPER ROD TO ACCOMMODATE INSULATION IF APPLICABLE. PULL ROD END TO EDGE OF DUCTWORK AS REQUIRED AND SEAL TO MAINTAIN VAPOR BARRIER.
4. INSTALL LOCKING QUADRANT TO HANDLE ON BOTTOM OF DUCT FOR EASE OF SERVICE.

(7) 45° LATERAL FLEXIBLE DUCT TAKE OFF DETAIL
NTS

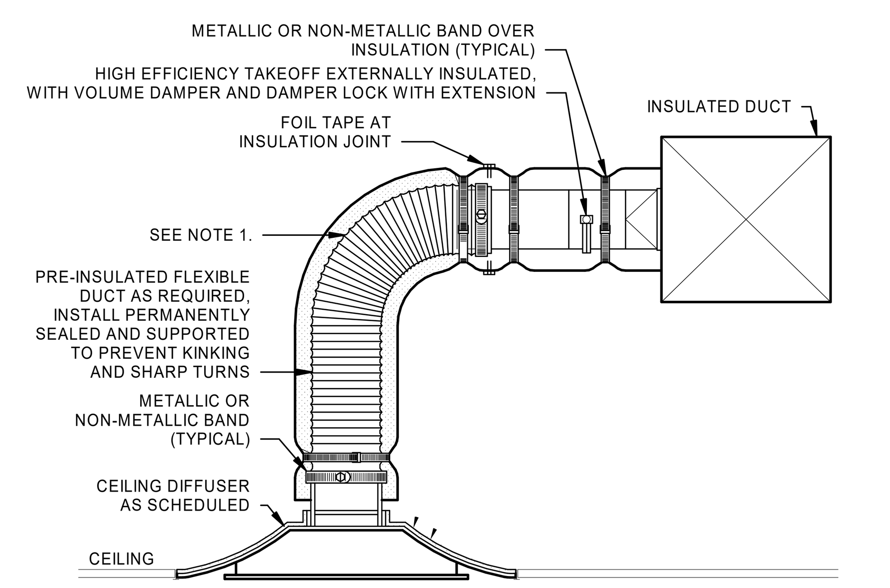

NOTES:
1. EXTEND RIGID METAL DUCT SO THAT MAXIMUM FLEXIBLE DUCT LENGTH DOES NOT EXCEED 5'-0". PROVIDE RIGID 90° ELBOW WHERE REQUIRED TO KEEP FLEXIBLE DUCT WITHIN 5'-0" LENGTH LIMITATION.

(6) LAY-IN CEILING DIFFUSER DETAIL
NTS

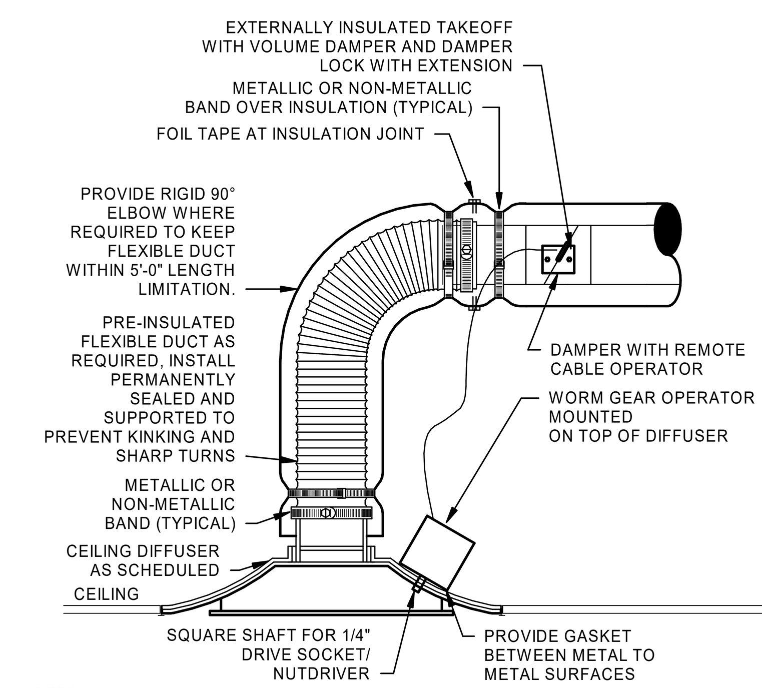

NOTES:
1. FLEXIBLE DUCT LENGTH MAY NOT EXCEED 5'-0". EXTEND RIGID DUCT AS REQUIRED.
2. REFER TO SPECIFICATIONS FOR FLEXIBLE DUCTWORK INSTALLATION REQUIREMENTS.

(5) GYP CEILING DIFFUSER DETAIL
NTS

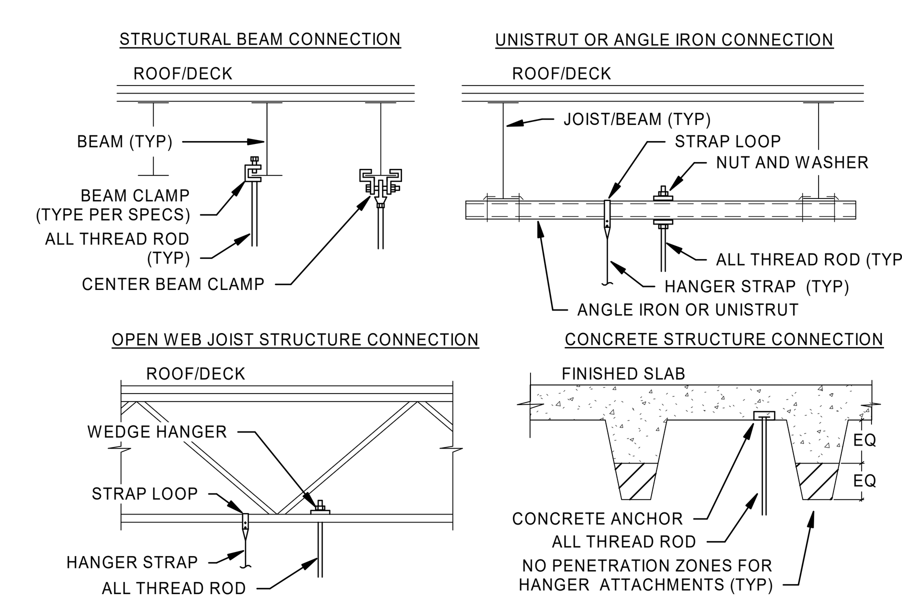

NOTES:
1. ALL ATTACHMENTS SHALL BE INSTALLED PER MANUFACTURER'S REQUIREMENTS AND SHALL BE APPROVED FOR THE SPECIFIC APPLICATION.
2. COORDINATE ALL ATTACHMENTS WITH ARCHITECT AND STRUCTURAL ENGINEER.
3. REFER TO SPECIFICATIONS FOR MORE INFORMATION ON APPROVED ATTACHMENT METHODS.
4. REFER TO SPECIFICATIONS FOR REQUIREMENTS RELATING TO SEISMIC INSTALLATIONS.
5. FOR OPEN WEB JOIST STRUCTURE, CONTRACTOR MAY HANG FROM TOP CHORD AND RUN DUCT AND PIPING THROUGH WEB JOIST WHEN APPROPRIATE. ANY CONCENTRATED LOADS NOT OCCURRING AT JOIST PANEL POINTS MUST BE REVIEWED BY A STRUCTURAL ENGINEER FOR FIELD INSTALLED PANEL BRACE REQUIREMENTS.

(9) HANGER UPPER ATTACHMENT DETAILS
NTS

BRADLEY E. CHAMBON

Architect:

ARCHITECT OF RECORD:
BRR ARCHITECTURE, INC
8131 METCALF AVE
SUITE 300
OVERLAND PARK, KS 66204

www.brrarch.com

TEL: 913-262-9095
FAX: 913-262-9044

COPYRIGHT NOTICE

This drawing was prepared for use on a specific site contemporaneously with its issue date and it is not suitable for use on a different project site or at a later time. Use of this drawing for reference or example on another project requires the services of properly licensed architects and engineers. Reproduction of this drawing for reuse on another project is not authorized and may be contrary to the law.

Engineer:

HENDERSON ENGINEERS
8345 LENEXA DRIVE, SUITE 300
LENEXA, KS 66214
TEL 913.742.5000 FAX 913.742.5001
WWW.HENDERSONENGINEERS.COM
2050003713
FL CORPORATE NO: EB 7606
EXPIRES 2/28/2021

Project Owner:

NIKE, Inc.
One Bowerman Drive
Beaverton, OR 97005
(503) 671-6453
www.nike.com

Project Address:

NIKE FACTORY STORE
WATERFORD LAKES SHOPPING CENTER
449 N. ALAFAYA TRAIL
ORLANDO, FL 32828
TEMPLATE ISSUE DATE: 11/28/2018

Fixture Package:

UNITE

Stamp:

THIS DOCUMENT IS RELEASED FOR THE PURPOSE OF PRELIMINARY SUBMITTAL
BRADLEY E. CHAMBON
LICENSE # 82784

IT IS NOT TO BE USED FOR CONSTRUCTION PURPOSES

BRADLEY E. CHAMBON
LICENSE # 82784

Issued For:

PERMIT/BID

Issue Date:

11/06/2020

Revisions:

NO.	REASON	DATE

PROJECT MANAGER:
KH
CHECKED BY:

DRAWN BY:
Author

Project Number:

62301411

Sheet Title:

MECHANICAL DETAILS

Sheet Number:

M2.0

ROOFTOP UNIT CONTROL MATRIX

CONTROL FEATURE	UNITS	RTU-1 SETPOINT OR Y/N	RTU-2 SETPOINT OR Y/N	RTU-3 SETPOINT OR Y/N	RTU-4 SETPOINT OR Y/N	RTU-5 SETPOINT OR Y/N	POINT TYPE INTERFACE WITH DDC (READ/WRITE)	NOTES
BUILDING AUTOMATION SYSTEM (BAS)								
ENERGY MANAGEMENT SYSTEM INTERFACE		Y	Y	Y	Y	Y	BACNET	A
SETPOINTS								
COOLING - EFFECTIVE OCCUPIED COOLING SETPOINT	°F	74	74	74	74	74	READ/WRITE	
COOLING - EFFECTIVE UNOCCUPIED COOLING SETPOINT	°F	85	85	85	85	85	READ/WRITE	
COOLING - MINIMUM COOLING SUPPLY AIR TEMPERATURE (SAT) SETPOINT	°F	50	50	50	50	50	READ/WRITE	
COOLING - LOCKOUT TEMPERATURE SETPOINT	°F	55	55	55	55	55	READ/WRITE	
DEAD BAND - MINIMUM HEATING AND COOLING TEMPERATURE SETPOINT DIFFERENCE	°F	6	6	6	6	6		
HEATING - EFFECTIVE OCCUPIED HEATING SETPOINT	°F	68	68	68	68	68	READ/WRITE	
HEATING - EFFECTIVE UNOCCUPIED HEATING SETPOINT	°F	58	58	58	58	58	READ/WRITE	
HEATING - MAXIMUM HEATING SUPPLY AIR TEMPERATURE (SAT) SETPOINT	°F	110	110	110	110	110	READ/WRITE	
HEATING - LOCKOUT TEMPERATURE SETPOINT	°F	55	55	55	55	55	READ/WRITE	
DEHUMIDIFICATION SETPOINT - HUMIDITY SENSOR FEEDBACK	% RH	55	55	55	55	55	READ/WRITE	
ECONOMIZER - HIGH OUTSIDE AIR TEMPERATURE (OAT) LOCKOUT SETPOINT	°F	75	75	75	75	75	READ/WRITE	
PROGRAMMED CONTROL FEATURES								
DEMAND CONTROL VENTILATION (DCV) HIGH ALARM SETPOINT - CO2 SENSOR FEEDBACK	PPM	750	750	750	750	N/A	READ/WRITE	
EQUIPMENT ACCESSORIES AND CONTROL MODULES								
OUTSIDE AIR DAMPER - MOTOR OPERATED (MODULATING)		Y	Y	Y	Y	Y	READ/WRITE	M
INTEGRATED ECONOMIZER - DIFFERENTIAL DRY BULB AND DIFFERENTIAL ENTHALPHY		Y	Y	Y	Y	Y	READ/WRITE	G,H
ECONOMIZER FAULT DETECTION AND DIAGNOSTICS (FDD) SYSTEM		Y	Y	Y	Y	Y	READ	O
RELIEF - BAROMETRIC DAMPER		Y	Y	N	N	N		
RELIEF - CONSTANT VOLUME POWERED EXHAUST FAN		N	N	Y	Y	Y	READ STATUS	N,O
COOLING COIL (DX - STAGED)		Y	Y	Y	Y	Y	READ STATUS	E,F
DEHUMIDIFICATION - HOT GAS REHEAT		Y	Y	Y	Y	Y	READ STATUS	L
HEATING COIL (NATURAL GAS)		Y	Y	Y	Y	Y	READ STATUS	J,K
SUPPLY FAN CONTROL METHOD								
ON DURING OCCUPIED HOURS		Y	Y	Y	Y	Y		B
UNIT START AND FAN OFF DELAY		Y	Y	Y	Y	Y		B
OPTIMUM START SEQUENCE		Y	Y	Y	Y	Y		O
VARIABLE VOLUME - 2-SPEED FAN CONTROL		N	N	Y	Y	Y	READ STATUS	C
SAFETIES, INTERLOCKS, AND ALARMS								
SUPPLY AIR SMOKE DETECTOR - FIRE SAFETY SHUTDOWN		Y	Y	Y	Y	Y	READ	D
RETURN AIR SMOKE DETECTOR - FIRE SAFETY SHUTDOWN		Y	Y	Y	Y	Y	READ	D
SAFETY CHAIN - SAFETY SHUTDOWN		Y	Y	Y	Y	Y	READ	D
SAT ALARM - SAFETY SHUTDOWN		Y	Y	Y	Y	Y	READ	D
SPT ALARM - SAFETY SHUTDOWN		Y	Y	Y	Y	Y	READ	D
GAS VALVE SAFETY		Y	Y	Y	Y	Y	READ	O

EMS VENDOR SHALL PROVIDE CONTROL PANEL, RELAYS, THERMOSTATS, TEMPERATURE SENSORS, HUMIDTY SENSORS, AND/OR CO2 SENSORS WHERE SHOWN ON THE DRAWINGS AND AS REQUIRED TO FACILITATE THE SCHEDULED SEQUENCE OF OPERATION. EACH UNIT SHALL CONTROL BASED ON ITS OWN INTERNAL SAFETIES, TIME DELAYS, AND SEQUENCES UNLESS NOTED OTHERWISE. COORDINATE WITH OWNER FINAL BUILDING AND EQUIPMENT SCHEDULES DURING STARTUP.

NOTES:

A. EMS SHALL PROVIDE REMOTE SETPOINT ADJUSTMENT, SCHEDULING, AND MONITORING OF THE POINTS LISTED IN THE SCHEDULE FOR EACH UNIT. THE RTU SHALL BE SCHEDULED WITH A MINIMUM OF AN OCCUPIED AND UNOCCUPIED SCHEDULE. ADDITIONAL UNIT SCHEDULES SHALL BE AVAILABLE FOR REMOTE IMPLEMENTATION IF REQUIRED.
B. THE SUPPLY FAN SHALL RUN CONTINUOUSLY IN OCCUPIED MODE AND SHALL CYCLE ON AND OFF IN UNOCCUPIED MODE. A UNIT START DELAY IS USED WHEN TRANSITIONING FROM UNOCCUPIED TO OCCUPIED. FAN OFF DELAY ALLOWS THE SUPPLY FAN TO CONTINUE TO OPERATE AFTER HEATING AND COOLING STOPS.
C. VIA FACTORY VFD, THE CARRIER RTU OPEN BOARD SHALL DETERMINE FAN SPEED REQUIRED FOR HEATING AND COOLING. FACTORY VFD SHALL CONTROL TO 2 FAN SPEEDS. LOW SPEED SHALL NOT EXCEED 66% OF FULL SPEED AND SHALL DRAW NO MORE THAN 40% OF FAN POWER AT FULL SPEED. DURING FAN ONLY OR SINGLE STAGE COOLING, SUPPLY FAN SHALL OPERATE AT LOW SPEED. DURING HEATING, SECOND STAGE COOLING, DEHUMIDIFICATION OR FULL ECONOMIZER OPERATION, FAN SHALL OPERATE AT HIGH SPEED.
D. IF A LOCAL UNIT CONTROL ALARM IS ACTIVE, THE SUPPLY FAN TURNS OFF IMMEDIATELY REGARLESS OF OCCUPANY STATE OR DEMAND.
E. COOLING STAGES ARE CONTROLLED BY THE CARRIER RTU OPEN COOLING CONTROL PID LOOP AND COOLING STAGES CAPACITY ALGORITHM. THEY CALCULATE THE REQUIRED NUMBER OF STAGES NEEDED TO SATISFY THE SPACE BY COMPARING THE SPACE TEMPERATURE TO THE EFFECTIVE OCCUPIED COOLING SETPOINT IN OCCUPIED MODE AND THE EFFECTIVE UNOCCUPIED COOLING SETPOINT IN UNOCCUPIED MODE. THE FOLLOWING CONDITIONS MUST BE TRUE FOR THE COOLING ALGORITHM TO OPERATE:
   - THE OUTDOOR AIR TEMPERATURE IS GREATER THAN THE COOLING LOCKOUT TEMPERATURE SETPOINT.
   - THE SUPPLY FAN HAS BEEN ON FOR AT LEAST 30 SECONDS.
   - THE UNIT HAS A VALID SUPPLY AIR TEMPERATURE INPUT.
   - THE UNIT HAS A VALID SPACE TEMPERATURE INPUT.
   - HEATING MODE IS NOT ACTIVE AND THE TIME GUARD BETWEEN MODES HAS EXPIRED.
   - ECONOMIZER IS UNAVAILABLE OR ECONOMIZER IS ACTIVE AND THE FOLLOWING ARE TRUE: (1) ECONOMIZER IS GREATER THAN 85% OPEN, (2) SUPPLY AIR TEMPERATURE IS GREATER THAN 5 DEGREES ABOVE THE MINIMUM COOLING SAT SETPOINT, AND (3) SPACE TEMPERATURE IS GREATER THAN 0.5 DEGREES ABOVE THE EFFECTIVE OCCUPIED TEMPERATURE SETPOINT.

   WHEN THE COOLING ALGORITHM PRECONDITIONS ARE MET, THE COMPRESSORS ARE ENERGIZED IN STAGES, AS APPLICABLE. ANTI-RECYCLE TIMERS ARE EMPLOYED TO PROTECT THE EQUIPMENT FROM SHORT-CYCLING. THERE ARE FIXED THREE-MINUTE MINIMUM ON-TIMES AND FIVE-MINUTE OFF-TIMES FOR EACH COMPRESSOR OUTPUT.
F. DURING COMPRESSOR OPERATION, THE RTU OPEN CONTROL LOGIC MAY REDUCE THE NUMBER OF ACTIVE STAGES IF THE SUPPLY AIR TEMPERATURE FALLS BELOW THE MINIMUM COOLING SAT SETPOINT. A COMPRESSOR STAGED OFF IN THIS FASHION MAY BE STARTED AGAIN AFTER THE NORMAL TIME-GUARD PERIOD HAS EXPIRED IF THE SUPPLY AIR TEMPERATURE HAS INCREASED ABOVE THE MINIMUM COOLING SAT SETPOINT.
G. THE SYSTEM SHALL UTILIZE THE FACTORY MODULATING ECONOMIZER FOR FREE COOLING WHEN OUTDOOR AIR CONDITIONS ARE SUITABLE. FOR THE ECONOMIZER TO OPERATE DURING OCCUPIED HOURS, THE FOLLOWING CONDITIONS MUST BE TRUE:
   -OUTDOOR AIR TEMPERATURE IS LESS THAN THE SPACE TEMPERATURE AND LESS THAN THE ECONOMIZER HIGH OAT LOCKOUT SETPOINT.
   -THE INDOOR FAN HAS BEEN ON FOR AT LEAST 30 SECONDS.
   -THE UNIT HAS A VALID SUPPLY AIR TEMPERATURE INPUT.
   -THE UNIT HAS A VALID SPACE TEMPERATURE INPUT.
   -OUTDOOR AIR ENTHALPY IS LESS THAN THE SPACE ENTHALPY. (ENTHALPY STATUS SHALL READ "LOW".)

   IF ANY OF THE PRECEDING CONDITIONS ARE NOT TRUE AND THE SUPPLY FAN IS ON HIGH SPEED, THE ECONOMIZER SHALL BE SET TO THE DCV MINIMUM OUTDOOR AIR DAMPER POSITION (TBD BY TAB CONTRACTOR). IF ANY OF THE PRECEDING CONDITIONS ARE NOT TRUE AND THE SUPPLY FAN IS ON LOW SPEED, THE ECONOMIZER SHALL BE SET TO THE LOW FAN ECONOMIZER MINIMUM DAMPER POSITION (TBD BY TAB CONTRACTOR). IF ALL OF THE PRECEDING CONDITIONS ARE TRUE, THE ECONOMIZER PID LOOP SHALL MODULATE THE DAMPER. THE ECONOMIZER POSITION SHALL BE REDUCED AS THE SUPPLY AIR TEMPERATURE FALLS TO WITHIN 5 DEGREES OF THE MINIMUM COOLING SAT SETPOINT, BUT SHALL NEVER CLOSE BELOW THE DCV MINIMUM OUTDOOR AIR DAMPER POSITION.
H. DURING UNOCCUPIED HOURS, UNOCCUPIED FREE COOLING SHALL BE ENABLED. THE ECONOMIZER SHALL REMAIN CLOSED UNLESS THE FOLLOWING CONDITIONS ARE TRUE:
   -OUTDOOR AIR TEMPERATURE IS BELOW THE ECONOMIZER HIGH OAT LOCKOUT SETPOINT.
   -OUTDOOR AIR TEMPERATURE IS LESS THAN THE SPACE TEMPERATURE
   -OUTDOOR AIR ENTHALPY IS LESS THAN THE SPACE ENTHALPY. (ENTHALPY STATUS SHALL READ "LOW".)

   IF ALL OF THE PRECEDING CONDITIONS ARE TRUE AND THE SPACE TEMPERATURE RISES 1 DEGREE ABOVE THE EFFECTIVE UNOCCUPIED COOLING SETPOINT, THE SUPPLY FAN SHALL START AND THE ECONOMIZER DAMPER SHALL OPEN AS NECESSARY TO COOL THE SPACE. THE DAMPER SHALL REMAIN OPEN UNTIL THE SPACE IS SATISFIED OR THE PRECEDING CONDITIONS ARE NO LONGER TRUE. IF ANY OF THE PRECEDING CONDITIONS ARE NOT TRUE, THE ECONOMIZER SHALL CLOSE COMPLETELY.
J. HEATING STAGES ARE CONTROLLED BY THE CARRIER RTU OPEN HEATING CONTROL PID LOOP AND HEATING STAGES CAPACITY ALGORITHM. THEY CALCULATE THE REQUIRED NUMBER OF STAGES NEEDED TO SATISFY THE SPACE BY COMPARING THE SPACE TEMPERATURE TO THE EFFECTIVE OCCUPIED HEATING SETPOINT IN OCCUPIED MODE AND THE EFFECTIVE UNOCCUPIED HEATING SETPOINT IN UNOCCUPIED MODE. THE FOLLOWING CONDITIONS MUST BE TRUE FOR THE HEATING ALGORITHM TO OPERATE:
   -OUTDOOR AIR TEMPERATURE IS LESS THAN THE HEATING LOCKOUT TEMPERATURE SETPOINT.
   -THE SUPPLY FAN HAS BEEN ON FOR AT LEAST 30 SECONDS.
   -THE UNIT HAS A VALID SUPPLY AIR TEMPERATURE INPUT.
   -THE UNIT HAS A VALID SPACE TEMPERATURE INPUT.
   -COOLING MODE AND ECONOMIZER ARE NOT ACTIVE AND THE TIME GUARD BETWEEN MODES HAS EXPIRED.

   WHEN THE HEATING ALGORITHM PRECONDITIONS ARE MET, THE HEAT IS ENERGIZED IN STAGES, AS APPLICABLE. ANTI-RECYCLE TIMERS ARE EMPLOYED TO PROTECT THE EQUIPMENT FROM SHORT-CYCLING. THERE ARE FIXED ONE-MINUTE MINIMUM ON AND OFF TIMES FOR EACH HEATING OUTPUT.
K. DURING HEATING OPERATION, THE RTU OPEN CONTROL LOGIC MAY REDUCE THE NUMBER OF ACTIVE STAGES IF THE SUPPLY AIR TEMPERATURE EXCEEDS THE MAXIMUM HEATING SAT SETPOINT. A HEAT STAGE TURNED OFF IN THIS FASHION MAY BE STARTED AGAIN AFTER THE NORMAL TIME-GUARD PERIOD HAS EXPIRED IF THE SUPPLY AIR TEMPERATURE HAS DECREASED BELOW THE MAXIMUM HEATING SAT SETPOINT.
L. THE SYSTEM SHALL UTILIZE HUMIDITY SENSORS IN THE SALES AREA, STOCKROOM, AND EMPLOYEE LOUNGE. DEHUMIDIFICATION IS CONTROLLED BY THE HUMIDI-MIZER ADAPTIVE DEHUMIDIFICATION SYSTEM. DURING OCCUPIED AND UNOCCUPIED MODE, THE FOLLOWING CONDITIONS MUST BE TRUE FOR THE HUMIDI-MIZER SYSTEM TO OPERATE:
   -OUTDOOR AIR TEMPERATURE IS LESS THAN THE SPACE TEMPERATURE.
   -THE INDOOR FAN HAS BEEN ON FOR AT LEAST 30 SECONDS.
   - THE UNIT HAS A VALID SUPPLY AIR TEMPERATURE INPUT.
   - THE UNIT HAS A VALID SPACE TEMPERATURE INPUT.
   - THE UNIT HAS A VALID SPACE RELATIVE HUMIDITY SENSOR INPUT.
   - HEAT MODE IS NOT ACTIVE AND THE TIME GUARD BETWEEN MODES HAS EXPIRED.

   IF ALL OF THE PRECEDING CONDITIONS ARE TRUE AND ANY ZONE RISES ABOVE THE DEHUMIDIFICATION SETPOINT, THE RTU OPEN SHALL ENABLE DEHUMIDIFICATION MODE AND ENERGIZE THE HUMIDI-MIZER OUTPUT FOR ALL UNITS SERVING THAT ZONE. DEHUMIDIFICATION MODE SHALL CONTINUE UNTIL THE SPACE RELATIVE HUMIDITY DROPS BELOW THE DEHUMIDIFICATION SETPOINT BY A 5% FIXED HYSTERESIS.
M. THE SYSTEM SHALL UTILIZE A CO2 SENSOR FOR THE SALES AREA, FITTING ROOM, STOCKROOM AND EACH OFFICE (HIGHEST READING WILL BE TAKEN FOR OFFICE DCV CONTROL). DCV IS CONTROLLED BY THE INDOOR AIR CO2 ALGORITHM. THE ALGORITHM CALCULATES THE CO2 MINIMUM DAMPER POSITION USING A PID LOOP. THE CALCULATED CO2 MINIMUM DAMPER POSITION IS THEN COMPARED AGAINST THE DCV MINIMUM POSITION SETPOINT AND THE GREATEST VALUE BECOMES THE FINAL MINIMUM DAMPER POSITION. DURING OCCUPIED HOURS, THE INDOOR AIR CO2 SEQUENCE SHALL BE ENABLED. THE FOLLOWING CONDITIONS MUST BE TRUE FOR THE INDOOR AIR CO2 ALGORITHM TO OPERATE:
   -THE SUPPLY FAN HAS BEEN ON FOR AT LEAST 30 SECONDS.
   -THE UNIT HAS A VALID CO2 SENSOR READING.

   IF ALL OF THE PRECEDING CONDITIONS ARE TRUE, THE FACTORY OUTDOOR AIR DAMPER SHALL MODULATE BETWEEN ITS MINIMUM (ABS. MIN. O/A) AND MAXIMUM (MIN. O/A CFM) POSITION (TBD BY TAB CONTRACTOR). THE SYSTEM SHALL START TO MODULATE THE DAMPER OPEN WHEN CO2 LEVEL RISES TO 100 PPM (ADJUSTABLE) ABOVE AMBIENT CO2 LEVEL (400 PPM) AND SHALL CONTINUE TO OPEN TO ITS MAXIMUM POSITION AS CO2 LEVEL RISES TO AND ABOVE THE DCV HIGH ALARM SETPOINT. AS THE CO2 LEVEL DROPS, THE DAMPER SHALL START TO MODULATE TO ITS MINIMUM POSITION. DURING UNOCCUPIED HOURS, THE INDOOR AIR CO2 SEQUENCE SHALL BE DISABLED.
N. POWERED EXHAUST FAN SHALL STAGE ON AND OFF ACCORDING TO DAMPER POSITION.
O. DEVICE SHALL BE FACTORY MOUNTED AND PRE-WIRED FOR OPERATION SUBJECT TO THE RTU OPEN CONTROLLER.

SEQUENCE OF OPERATION

A. ROOFTOP UNIT CONTROL (RTU-1,2,3,4,5)

Refer to Rooftop Unit Control Matrix for sequence of operations.

B. VAV DIFFUSER CONTROL (CSD1)

In occupied mode, the VAV diffuser shall modulate airflow to maintain the room temperature setpoint (adjustable). Set VAV diffuser minimum position to maintain 30% of the maximum airflow.

The room occupancy sensor, upon sensing the space to be vacant for 15 minutes (adjustable), shall signal the diffuser through the EMS to maintain an unoccupied temperature setpoint (adjustable). When occupancy is detected, the EMS shall direct the diffuser to control to the room temperature setpoint.

The room CO2 sensor, upon reading a CO2 level above 100 PPM (adjustable) above ambient CO2 level (400 PPM), shall signal the diffuser through the EMS to modulate the zone damper between its minimum and maximum position. The system shall start to modulate the damper open when CO2 level rises 100 PPM above ambient CO2 level and continue to open to its maximum position as CO2 level rises to and above 700 PPM (adjustable) above ambient CO2 levels. As the CO2 level drops, the system shall start to modulate the dampers to the minimum position.

In unoccupied mode, VAV diffuser control shall be disabled unless occupancy is detected. When occupancy is detected, the EMS shall direct the diffuser to control at the room temperature setpoint.

C. MOTORIZED DAMPER CONTROL (MD)

When RTU-2 is in heating mode, the motorized damper shall be closed.

When RTU-2 is in cooling mode and the supply air temperature drops below 65 degrees Fahrenheit (adjustable), the motorized damper shall open.

A damper end switch shall prove if the motorized damper is open when called. If failure to open occurs, an alarm shall be generated to the EMS.

D. A/V ROOM EXHAUST FAN CONTROL (EF-1)

The exhaust fan shall be enabled when the space temperature rises 1 degree above the cooling setpoint (75 degrees Fahrenheit, adjustable) and shall continue to operate until the space temperature drops to 1 degree below the cooling setpoint.

E. RESTROOM EXHAUST FAN CONTROL (EF-2)

In occupied mode, the exhaust fan shall be enabled and the motorized damper shall open.

In unoccupied hours, the exhaust fan shall be disabled and the motorized damper shall be closed.

A damper end switch shall prove if the motorized damper is open when called. If failure to open occurs, the fan shall not be enabled and an alarm shall be generated to the EMS.

CARRIER UNIT STARTUP REQUIREMENTS

INSTALLING CONTRACTOR SHALL COMPLETE THE PRE-START CHECKLIST AND EMAIL DENNY.LAWRENCE@COMFORTSYSTEMSUSA.COM TWO WEEKS PRIOR TO SCHEDULING EQUIPMENT STARTUP.

COORDINATE EQUIPMENT STARTUP WORK WITH COMFORT SYSTEMS USA
EMAIL: DENNY.LAWRENCE@COMFORTSYSTEMSUSA.COM
OFFICE: (317) 246-4644

DEPARTMENT MANAGER
EMAIL: KLORI.KARAMDAD@COMFORTSYSTEMSUSA.COM
OFFICE: 317-246-4656

TECHNICAL SUPPORT
EMAIL: RICK.FARRIS@COMFORTSYSTEMSUSA.COM
MOBILE: 317-638-5363 X4454

PRE-START CHECKLIST (VERIFY FOR ALL UNITS)

- ☐ VERIFY ALL ITEMS ON THE EQUIPMENT ORDER RECEIVED.
- ☐ VERIFY ALL PACKAGING MATERIAL REMOVED FROM THE UNIT.
- ☐ VERIFY CURB GASKETS PROPERLY INSTALLED.
- ☐ VERIFY ROOFTOP UNIT INSTALLED LEVEL AND PROPERLY ALIGNED WITH CURB.
- ☐ VERIFY DUCTWORK/FABRIC DUCT COMPLETELY INSTALLED PER MECHANICAL PLANS.
- ☐ VERIFY OA HOOD INSTALLED. AIR INLET SCREEN INSTALLED.
- ☐ VERIFY POWER EXHAUST ACCESSORY INSTALLED. (IF APPLICABLE)
- ☐ VERIFY CLEAN PLEATED FILTERS INSTALLED, MINIMUM MERV 8 RATING.
- ☐ VERIFY CONDENSATE DRAIN LINE INSTALLED. MINIMUM 2" DEEP TRAP. DRAIN PAN CHECK/LEVEL.
- ☐ VERIFY SUPPLY FAN ROTATES FREELY IN THE HOUSING.
- ☐ VERIFY PULLEYS ALIGNED AND BELT TENSION CORRECT.
- ☐ VERIFY SMOKE DETECTORS INSTALLED IN DUCTWORK, CLEANED AND TESTED.
- ☐ VERIFY GAS METER INSTALLED AND GAS AVAILABLE FROM THE UTILITY. GAS PIPING COMPLETED, CHECKED FOR LEAKS AND PURGED (IF APPLICABLE).
- ☐ VERIFY GAS PIPING DRIP LEG INSTALLED PROPERLY. (DOWNSTREAM OF SHUTOFF VALVE AND NO INTERFERENCE WITH ACCESS DOOR)
- ☐ VERIFY FLUE HOOD INSTALLED.
- ☐ VERIFY JOBSITE POWER SUPPLY MATCHES THE VOLTAGE ON THE UNIT DATA PLATE.
- ☐ VERIFY ELECTRIC POWER CONNECTED TO UNIT VIA THE ACCESS PROVIDED. IF NOT, DATE POWER WILL BE AVAILABLE ____________
- ☐ VERIFY NO WIRES TOUCHING REFRIGERANT LINES OR SHARP EDGES.
- ☐ VERIFY ELECTRIC CONNECTORS AND TERMINALS TIGHT.
- ☐ VERIFY THRU-THE-CURB UTILITY CONNECTIONS COMPLETE.
- ☐ VERIFY UNIT TRANSFORMER PRIMARY TAPPED FOR JOBSITE VOLTAGE.
- ☐ VERIFY VENSTAR THERMOSTAT INSTALLED IN THE RETURN AIR DUCT DROP AND WIRED FOR TEMPORARY UNIT OPERATION.

FAN SCHEDULE

MARK	SERVICE DESCRIPTION	MANUFACTURER	MOUNTING	MODEL	ROOF OPENING	CFM	ESP (IN)	NOM HP	FAN RPM	DRIVE (BELT/DIRECT)	ELECTRICAL V/PH	WEIGHT (LBS)	NOTES
EF-1	TRANSFER	GREENHECK	INLINE	SQ-100-VG	N/A	1000	0.5	1/4	1513	DIRECT	120/1	45	B,C,D,E,F,G
EF-2	EXHAUST	GREENHECK	ROOF	G-080-VG	12.5x12.5	275	0.5	1/10	1617	DIRECT	120/1	30	A,B,D,E,F,H

MODEL NUMBERS SHALL NOT BE CONSIDERED COMPLETE AND MATERIAL SHALL NOT BE ORDERED BY MANUFACTURER AND MODEL NUMBERS ONLY. REVIEW THE COMPLETE DESCRIPTION, NOTES AND SPECIFICATIONS TO DETERMINE THE EXACT MATERIAL AND ACCESSORIES TO BE ORDERED. THE MANUFACTURERS LISTED ARE THE BASIS FOR THE DESIGN.

NOTES:

A. PROVIDE INSULATED ROOF CURB WITH MINIMUM HEIGHT REQUIRED TO MAINTAIN BOTTOM OF EQUIPMENT A MINIMUM OF 8 INCHES ABOVE FINISHED ROOF SURFACE. PROVIDE SLOPED CURB IF NEEDED TO MATCH ROOF SLOPE. COORDINATE WITH ROOF INSULATION THICKNESS AND ROOF TAPER AT INSTALLED LOCATION. COORDINATE CURB TYPE WITH DRAWINGS.
B. PROVIDE BIRDSCREEN AND INTEGRAL MOTORIZED DAMPER. COORDINATE REQUIREMENTS WITH EMS VENDOR PRIOR TO PURCHASE.
C. PROVIDE RUBBER IN SHEAR ISOLATION AND ALL-THREAD HANGING RODS.
D. PROVIDE FACTORY MOUNTED DISCONNECT SWITCH.
E. PROVIDE WITH MANUFACTURER'S ELECTRONICALLY COMMUTATED (EC) MOTOR.
F. NOMINAL MOTOR HP SHALL BE NO LARGER THAN THE FIRST AVAILABLE NOMINAL MOTOR SIZE GREATER THAN THE BHP.
G. INTERLOCK FAN WITH SPACE MOUNTED TEMPERATURE SENSOR. 24V RELAY FURNISHED BY EMS VENDOR.
H. INTERLOCK FAN WITH ENERGY MANAGEMENT SYSTEM (EMS). 24V RELAY FURNISHED BY EMS VENDOR.

GRILLE, REGISTER AND DIFFUSER SCHEDULE

MARK	MANUFACTURER	SERVICE	MODEL	CONSTRUCTION TYPE	FACE TYPE	MOUNTING LOCATION	BORDER TYPE	FACE SIZE (IN)	MAX. NC	MAX. PRESS. DROP (IN. W.C.)	NOTES
CEG1	TITUS	EXHAUST	OMNI	STEEL	PLAQUE	CEILING	--	12x12	25	0.1	B, C, E, F, H
CRG1	TITUS	RETURN	PAR	STEEL	PERFORATED	CEILING	--	24x24	25	0.1	B, C, F
CRG2	TITUS	RETURN	PAR	STEEL	PERFORATED	CEILING	--	12x24	25	0.1	B, C, F
CSD1	PRICE	SUPPLY	PRODIGY	STEEL	PLAQUE	CEILING	--	24x24	25	0.1	A, B, C, F, J
CSD2	TITUS	SUPPLY	OMNI	STEEL	PLAQUE	CEILING	--	24x24	25	0.1	A, B, C, E, F
CSD3	TITUS	SUPPLY	OMNI	STEEL	PLAQUE	CEILING	--	12x12	25	0.1	A, B, C, E, F, H
CSD4	TITUS	SUPPLY	R-OMNI	STEEL	PLAQUE	CEILING	--	18"Ø	25	0.1	B, C, F, H
WTG1	TITUS	TRANSFER	350RL	STEEL	LOUVERED	WALL	--	REFER TO PLANS	25	0.1	B, C, D, F, G, K

MODEL NUMBERS SHALL NOT BE CONSIDERED COMPLETE AND MATERIAL SHALL NOT BE ORDERED BY MANUFACTURER AND MODEL NUMBERS ONLY. REVIEW THE COMPLETE DESCRIPTION, NOTES AND SPECIFICATIONS TO DETERMINE THE EXACT MATERIAL AND ACCESSORIES TO BE ORDERED. THE MANUFACTURERS LISTED ARE THE BASIS FOR THE DESIGN.

NOTES:

A. 4-WAY THROW PATTERN UNLESS OTHERWISE INDICATED BY FLOW ARROWS ON DRAWINGS.
B. NECK SIZE SHOWN ON DRAWINGS. PROVIDE BRANCH DUCT TO MATCH NECK SIZE UNLESS OTHERWISE SHOWN ON DRAWINGS.
C. BAKED ENAMEL FINISH, COLOR TO MATCH WALL, DUCT, AND/OR CEILING COLOR. COORDINATE WITH ARCHITECT PRIOR TO ORDERING.
D. FRONT BLADES PARALLEL TO LONG DIMENSION.
E. PROVIDE WITH RAPID MOUNT FRAMING OPTION FOR LAY-IN TYPE DIFFUSERS INSTALLED IN A HARD CEILING.
F. FRAME TYPE TO MATCH CEILING//WALL CONSTRUCTION, COORDINATE WITH ARCHITECTURAL REFLECTED CEILING/WALL PLAN.
G. PROVIDE DIFFUSERS AND GRILLES WITH NO EXPOSED MOUNTING SCREWS.
H. CONTRACTOR SHALL PROVIDE REMOTE CABLE-OPERATED VOLUME DAMPER BY METROPOLITAN AIR TECHNOLOGIES MODEL RT-250 WITH EXTERNAL WORM GEAR OPERATOR OR EQUIVALENT YOUNG REGULATOR BUTTERFLY DAMPER WITH 270-275 CONTROLLER. OPERATOR SHALL HAVE A SQUARE DRIVE FOR 1/4" NUT DRIVER. DAMPER ASSEMBLY SHALL INCLUDE GALVANIZED STEEL DUCT WITH ROLLED BEAD STIFFENERS, REINFORCED BLADE, LUBRICATING SELF BEARING AND WORM GEAR MOUNTING PLATE. DAMPER SHALL BE INSTALLED IN BRANCH DUCT NOT INLET OF PLENUM DIFFUSER.
J. INTERLOCK VARIABLE AIR VOLUME DIFFUSER WITH SPACE MOUNTED THERMOSTAT AND EMS. MAXIMUM AIRFLOW SHALL BE AS NOTED ON PLANS. MINIMUM AIRFLOW SHALL BE 30% OF MAXIMUM AIRFLOW. DIFFUSERS, PRESSURE RELIEF COLLAR, THERMOSTAT, POWER MODULE, POWER CABLE AND CABLE COUPLER FURNISHED BY EMS VENDOR AND INSTALLED BY CONTRACTOR.
K. INSTALL WALL TRANSFER TRILLES WITH BLADES DIRECTED UPWARD FOR VISIBILITY.

PROJECT DESIGN CONDITIONS

CLIMATE CONDITONS

WEATHER STATION:		ORLANDO EXECUTIVE, FL, USA					
CLIMATE ZONE:		2A					
HEATING (DB):	99.6%	38.9	°F				
DESIGN HEATING CONDITIONS (DB):		29.6	°F				
HUMIDIFICATION (DP/ HR/ MCDB):	99.6%	19.4	°F/	14.7	gr/lb	46.4	°F
COOLING (DB/MCWB):	0.4%	93.5	°F/	76.1	°F/		
DESIGN COOLING CONDITIONS (DB/ MCWB):		82.4	°F/	79.4	°F/		
DEHUMIDIFICATION (DP/ HR/ MCDB):	0.4%	78.4	°F/	148.3	gr/lb	82.4	°F

BUILDING OPERATING HOURS:

MONDAY - FRIDAY	TBD BY OWNER
SATURDAY	TBD BY OWNER
SUNDAY	TBD BY OWNER
HOLIDAY	TBD BY OWNER

SPACE / UNIT DESCRIPTION	SET POINTS: COOLING / DE-HUMIDIFICATION OCC °F	UNOCC °F	MAX RH %	MIN RH %	HEATING OCC °F	UNOCC °F	HUMIDIFICATION MIN RH %	MAX RH %	ZONE VENTILATION RESET CONTROL METHOD	BASE PPM	MAXIMUM PPM	SPACE OPERATING HOURS OCCUPIED / UNOCCUPIED M-F	SAT	SUN	NOTES
RTU-1 BOH	74	85	60%	NA	68	58	NA	NA	CO2	400	1000	TBD	TBD	TBD	A-D
RTU-2 STOCK	74	85	60%	NA	68	58	NA	NA	CO2	400	1000	TBD	TBD	TBD	A-D
RTU-3 SALES	74	85	60%	NA	68	58	NA	NA	CO2	400	1000	TBD	TBD	TBD	A-D
RTU-4 SALES	74	85	60%	NA	68	58	NA	NA	CO2	400	1000	TBD	TBD	TBD	A-D
RTU-5 SOLAR	74	85	60%	NA	68	58	NA	NA	NA	NA	NA	TBD	TBD	TBD	A-C

NOTES:

A. ZONE LEVEL SET POINT CONDITIONS SHALL BE AS SCHEDULED UNLESS OTHERWISE SCHEDULED OR NOTED ON THE DRAWINGS FOR ROOM SPECIFIC SPACE CONDITIONS.
B. ZONE LEVEL OCCUPANCY HOUR SCHEDULE SHALL BE PER BUILDING OPERATING HOURS UNLESS OTHERWISE SCHEDULED.
C. ZONE LEVEL CONTROLS SHALL BE CAPABLE OF OPERATING WITH INDEPENDENT OCCUPANCY SCHEDULES.
D. ZONE LEVEL VENTILATION RESET / DEMAND CONTROL VENTILATION (DCV) CONTROL METHOD: CARBON DIOXIDE SENSOR (CO2).

ROOFTOP UNIT SCHEDULE (DX COOLING, NATURAL GAS HEAT)

MARK	MANUFACTURER	MODEL	NOMINAL TONS	SUPPLY FAN CFM	SUPPLY FAN ESP (IN)	SUPPLY FAN BHP	COOLING COIL TH (MBH)	SH (MBH)	EAT (°F DB)	EAT (°F WB)	LAT (°F DB)	LAT (°F WB)	REFR TYPE	MIN EFF (EER)	MIN EFF (IEER)	MIN NO STAGES	HEAT EXCHANGER MIN OUT (MBH)	NOM INPUT (MBH)	MIN EFF (%)	EAT (°F DB)	LAT (°F DB)	MIN NO STAGES	MIN O/A CFM	ABS MIN O/A	ELECTRICAL V/PH	MCA	MOCP	WEIGHT (LBS)	NOTES
RTU-1	CARRIER	48GCDN04	3	1,000	0.8	0.39	27.9	19.2	74.9	65.7	57.5	56.7	R-410A	-	16.0	2	56	72	82	65	85	2	125	75	480/3	10	15	587	A-Z
RTU-2	CARRIER	48GCDN05	4	1,500	0.6	0.79	46.1	35.6	74.9	63.0	53.2	52.5	R-410A	-	16.0	2	56	72	82	66	85	2	150	150	480/3	11	15	629	A-Z
RTU-3	CARRIER	48LCD014	12.5	3,750	0.8	1.18	145.2	72.8	75.6	68.2	58.3	57.6	R-410A	12.4	19.1	2	150	176	80	50.2	85	2	1225	600	480/3	40	50	2309	A-W
RTU-4	CARRIER	48LCDA12	10	3,000	0.8	2.25	115.0	61.7	75.5	67.9	57.4	56.5	R-410A	13.0	20.3	2	144	180	82	50.2	85	2	975	500	480/3	29	35	1994	A-W
RTU-5	CARRIER	48HCDE11	10	4,800	0.6	4.48	105.4	105.44	72.0	59.5	51.9	51.6	R-410A	12.0	14.3	2	121	148	82	70	85	2	0	0	480/3	28	30	1424	A-T, W, Y

MODEL NUMBERS AND NOMINAL TONS LISTED SHALL NOT BE CONSIDERED COMPLETE AND MATERIAL SHALL NOT BE ORDERED BY MANUFACTURER, MODEL NUMBERS, OR NOMINAL TONS ONLY. REVIEW THE COMPLETE DESCRIPTION, NOTES AND SPECIFICATIONS TO DETERMINE THE EXACT MATERIAL AND ACCESSORIES TO BE ORDERED. THE MANUFACTURERS LISTED ARE THE BASIS FOR THE DESIGN.

NOTES:

A. REFER TO ROOFTOP UNIT CONTROL MATRIX FOR CONTROL FEATURES, MODULES, AND ACCESSORIES THAT SHALL BE PROVIDED WITH THE EQUIPMENT.
B. EQUIPMENT SIZED FOR 100°F AMBIENT TEMPERATURE.
C. PROVIDE 2 INCH MERV 13, EFFICIENT PLEATED THROWAWAY AIR FILTERS.
D. PROVIDE FACTORY MOUNTED DISCONNECT INSTALLED ON SERVICE SIDE OF UNIT.
E. STARTERS FOR ALL MOTORS SHALL BE FURNISHED INTEGRAL WITH UNIT.
F. PROVIDE SINGLE POINT POWER CONNECTION.
G. COORDINATE SIZE OF CONDUCTOR TERMINATION LUGS WITH CONDUCTOR SIZES SHOWN ON ELECTRICAL DRAWINGS.
H. PROVIDE 125 VAC, 20 AMP DUPLEX CONVENIENCE RECEPTACLE MOUNTED TO UNIT READY FOR FIELD WIRING WITH A COVER UL LISTED FOR WET AND DAMPER LOCATIONS WHEN IN USE.
L. SPECIFIED FAN ESP ACCOUNTS FOR DUCT LOSSES EXTERNAL TO UNIT.
M. PROVIDE MOTOR HORSEPOWER TO OVERCOME INTERNAL UNIT STATIC PRESSURE DROP PLUS SPECIFIED EXTERNAL STATIC PRESSURE DROP. NOMINAL MOTOR HP SHALL BE NO LARGER THAN THE FIRST AVAILABLE NOMINAL MOTOR SIZE GREATER THAN THE REQUIRED BHP.
N. PROVIDE FLORIDA APPROVED NOA CURB DESIGNED TO WITHSTAND HURRICANE WIND FORCES.
Q. SCHEDULED WEIGHT IS THE MAXIMUM ALLOWABLE OPERATING WEIGHT OF THE EQUIPMENT AND CURB.
R. COOLING COIL LAT IS LEAVING AIR TEMPERATURE OF COIL.
S. PROVIDE GUARDS TO PROTECT CONDENSER COIL FROM HAIL OR OTHER DAMAGE.
T. PROVIDE HEATER TO MEET OR EXCEED SCHEDULED MINIMUM MBH OUTPUT. NOMINAL INPUT IS BASED ON LISTED MANUFACTURER'S STANDARD PRODUCT. COORDINATE EQUIPMENT GAS LOAD WITH PLUMBING CONTRACTOR IF DIFFERENT FROM THAT SCHEDULED. MEET MINIMUM EFFICIENCY SCHEDULED.
U. ABS. MIN. O/A IS THE ABSOLUTE MINIMUM OUTSIDE AIR CFM USING VENTILATION RESET OR DEMAND CONTROL VENTILATION.
W. PROVIDE UNIT WITH FACTORY INSTALLED BACNET OPEN BOARD CONTROLLER WITH SUPPLY AND OUTSIDE AIR TEMPERATURE SENSORS. COORDINATE ALL CONTROLS WITH EMS VENDOR PRIOR TO PURCHASE.
Y. PROVIDE UNIT WITH FACTORY INSTALLED UNIT CONTROLLER WITH SUPPLY AND OUTSIDE AIR TEMPERATURE SENSORS. UNIT MOUNTED CONTROLLER SHALL BE ABLE TO INTERFACE WITH EMS CONTROLS AND BE BACNET MSTP COMPATIBLE. COORDINATE ALL CONTROLS WITH EMS VENDOR PRIOR TO PURCHASE.
Z. PROVIDE WITH DUCT SMOKE DETECTOR KIT. SMOKE DETECTORS WHALL SHUT DOWN UNIT UPON ALARM.

OUTSIDE AIR REQUIREMENTS, IMC-2015 (IP)

SYSTEM DESIGNATION	SYSTEM TAB NAME OR LIST 'SINGLE'	SINGLE-ZONE SYSTEMS ONLY: SINGLE-ZONE SYSTEM ASSOCIATED VENTILATION ZONE	SINGLE ZONE WORST CASE ZONE AIR DISTRIBUTION EFFECTIVENESS [Ez]	MULTI-ZONE SYSTEMS ONLY: SYSTEM VENTILATION EFFICIENCY [Ev]	FLOOR AREA SERVED BY SYSTEM [As] (SF)	SYSTEM AVERAGED AREA-BASED OUTDOOR AIR RATE (CFM/SF)	SYSTEM POPULATION [Ps] (PEOPLE)	SYSTEM AVERAGED PEOPLE-BASED OUTDOOR AIR RATE (CFM/P)	REQUIRED OA INTAKE FLOW [Vot] (CFM)	REQUIRED DCV OA INTAKE FLOW [Vot] (CFM)	DESIGN OA INTAKE FLOW [Vot] (CFM)	NOTES
RTU-1	RTU-1	-	-	0.97	700	0.047	4.32	5.00	56	34	125 / 75	
RTU-2	RTU-2	-	-	1.00	1,177	0.114	8	0.00	134	N/A	150 / 150	
RTU-3,4,5	RTU-3,4,5	-	-	0.95	8,797	0.116	126	7.50	2,067	1,074	2200 / 1100	
								TOTALS	2,258	1,108	2475 / 1325	

GENERAL NOTES:

1. VENTILATION CALCULATIONS BASED ON IMC-2015.
2. SYSTEM POPULATIONS BASED ON MAX SEATING AND/OR CODE MAXIMUM VALUES.
3. SINGLE ZONE SYSTEMS (Vot = Voz): SYSTEM VENTILATION EFFICIENCY CALCULATION IS NOT REQUIRED FOR SINGLE ZONE SYSTEMS. WORST CASE AIR DISTRIBUTION EFFECTIVENESS BETWEEN HEATING AND COOLING MODES OF OPERATION IS SHOWN IN TABLE.
4. 100% OA SYSTEMS (Vot = ∑all zones Voz): WHEN ONE AIR HANDLER SUPPLIES ONLY OUTDOOR AIR TO ONE OR MORE ZONES. EACH ZONE IS INDIVIDUALLY CALCULATED WITH ITS WORST CASE ZONE AIR DISTRIBUTION EFFECTIVENESS (HEATING/COOLING).
5. MULTI-ZONE RECIRCULATING SYSTEMS: CALCULATOR USED TO DETERMINE VENTILATION AIRFLOW IN COMPLIANCE WITH IMC-2015 VRP AND ASHRAE 62.1-2013 APPENDIX A. VENTILATION RATE SHOWN IS ACTUAL CALCULATED WITH CORRECTION FACTORS INCLUDED. EACH ZONE IS CALCULATED WITH ITS WORST CASE ZONE AIR DISTRIBUTION EFFECTIVENESS (HEATING/COOLING) AS PART OF CALCULATIONS TO FIND Ev.

EMS CONTROLS:
CONTRACTORS ARE RESPONSIBLE FOR COORDINATING ALL EQUIPMENT CONTROLS WITH EMS VENDOR PRIOR TO PURCHASE AND INSTALLATION. CONTRACTORS SHALL COORDINATE WITH EMS VENDOR TO PROVIDE ALL NECESSARY EQUIPMENT AND ACCESSORIES FOR A FULLY FUNCTIONING SYSTEM.

BRADLEY E. CHAMBON

Architect:

brr

ARCHITECT OF RECORD:
BRR ARCHITECTURE, INC
8131 METCALF AVE
SUITE 300
OVERLAND PARK, KS 66204
www.brrarch.com
TEL: 913-262-9095
FAX: 913-262-9044

COPYRIGHT NOTICE
This drawing was prepared for use on a specific site contemporaneously with its issue date and it is not suitable for use on a different project site or at a later time. Use of this drawing for reference or example on another project requires the services of properly licensed architects and engineers. Reproduction of this drawing for reuse on another project is not authorized and may be contrary to the law.

Engineer:

HENDERSON ENGINEERS
8345 LENEXA DRIVE, SUITE 300
LENEXA, KS 66214
TEL 913.742.5000 FAX 913.742.5001
WWW.HENDERSONENGINEERS.COM
2050003713
FL. CORPORATE NO: EB 7606
EXPIRES 2/28/2021

Project Owner:

NIKE, Inc.
One Bowerman Drive
Beaverton, OR 97005
(503) 671-6453
www.nike.com

Project Address:

NIKE FACTORY STORE
WATERFORD LAKES SHOPPING CENTER
449 N. ALAFAYA TRAIL
ORLANDO, FL 32828
TEMPLATE ISSUE DATE: 11/28/2018

Fixture Package:
UNITE

Stamp:

THIS DOCUMENT IS RELEASED FOR THE PURPOSE OF PRELIMINARY SUBMITTAL
BRADLEY E. CHAMBON
LICENSE # 82784

IT IS NOT TO BE USED FOR CONSTRUCTION PURPOSES

BRADLEY E. CHAMBON
LICENSE # 82784

Issued For:
PERMIT/BID

Issue Date:
11/06/2020

Revisions:

NO.	REASON	DATE

PROJECT MANAGER:
KH

CHECKED BY:

DRAWN BY:
Author

Project Number:
62301411

Sheet Title:
MECHANICAL SCHEDULES AND CONTROLS

Sheet Number:
M3.0

Division 23: HEATING, VENTILATING, AND AIR CONDITIONING

1. GENERAL INSTRUCTIONS

A. GENERAL REQUIREMENTS

All requirements under Division 01 and the general and supplementary conditions of these specifications apply to this section and division. Where the requirements of this section and division exceed those of Division 01, this section and division take precedence. Become thoroughly familiar with all its contents as to requirements that affect this division , section, or both. Work required under this division includes all material, equipment, appliances, transportation, services, and labor required to complete the entire system as required by the drawings and specifications, or reasonably inferred to be necessary to facilitate the function of each system as implied by the design and the equipment specified.

The specifications and drawings for the project are complementary, and any portion of work described in one shall be provided as if described in both. In the event of discrepancies, notify the Engineer and request clarification prior to proceeding with the work involved.

Drawings are graphic representations of the work upon which the contract is based. They show the materials and their relationship to one another, including sizes, shapes, locations, and connections. They convey the scope of work, indicating the intended general arrangement of the systems without showing all of the exact details as to elevations, offsets, control lines, and other installation requirements. Use the drawings as a guide when laying out the work and to verify that materials and equipment will fit into the designated spaces, and which when installed per manufacturers' requirements, will ensure a complete, coordinated, satisfactory, and properly operating system.

B. DEFINITIONS

Division: References contained in this specification follow the numbering system defined in the Construction Specifications Institute (CSI) MasterFormat 2004 Edition. Specification Divisions 01 through 13 provided with this project may reference the CSI MasterFormat 1995 Edition. The corresponding division references between the 2004 Edition and 1995 Edition are as follows:

	2004 Edition	1995 Edition
1.	Division 21 - Fire Suppression	Division 15
2.	Division 22 - Plumbing	Division 15
3.	Division 23 - HVAC	Division 15
4.	Division 26 - Electrical	Division 16
5.	Division 27 - Communications	Division 16
6.	Division 28 - Electronic Safety and Security	Division 16

Furnish: "to supply and deliver to the project site, ready for unloading, unpacking, assembly, installation and similar operations."

Install: "to perform all operations at the project site including, but not limited to, the actual unloading, unpacking, assembling, erecting, placing, anchoring, applying, working to dimension, finishing, curing, protecting, cleaning, testing, commissioning, starting up and similar operations, complete, and ready for the intended use."

Provide: "to furnish and install."

Furnished by Owner (or Owner-Furnished) or Furnished by Others: "an item furnished by the Owner or under other divisions or contracts, and installed under the requirements of this division, complete and ready for intended use, including all items and services incidental to the work necessary for proper installation and operation. Include the installation under the warranty required by this division."

Engineer: Where referenced in this division, "Engineer" is the Engineer of Record and the Design Professional for the work under this division, and is a consultant to, and an authorized representative of the Architect, as defined in the General and/or Supplementary Conditions. When used in this division, Engineer means increased involvement by and obligations to the Engineer, in addition to involvement by and obligations to the Architect.

AHJ: The local code and/or inspection agency (Authority) Having Jurisdiction over the work.

NRTL: Nationally recognized testing laboratory, as defined and listed by OSHA in 29 CFR 1910.7 (e.g., UL, ETL, CSA), and acceptable to the AHJ over this project. Nationally recognized testing laboratories and standards listed are used only to represent the characteristics required and are not intended to restrict the use of other NRTLs that are acceptable to the AHJ and standards that meet the specified criteria.

Substitution: Changes in products, materials, equipment, and methods of construction from those required by the Contract Documents and proposed by Contractor. Substitutions include Value Engineering proposals.
1. Substitutions for Cause: Changes proposed by Contractor that are required due to changed Project conditions, such as unavailability of product, regulatory changes, or unavailability of required warranty terms.
2. Substitutions for Convenience: Changes proposed by Contractor or Owner that are not required in order to meet other Project requirements but may offer advantage to Contractor or Owner.

The terms "approved equal", "equivalent", or "equal" are used synonymously and shall mean "accepted by or acceptable to the Engineer as equivalent to the item or manufacturer specified". The term "approved" shall mean labeled, listed, or both, by an NRTL, and acceptable to the AHJ over this project.

C. PREBID SITE VISIT

Prior to submitting bid, visit the site of the proposed work and become fully informed as to the conditions under which the work is to be done. Failure to comply with this requirement shall not be considered sufficient justification to request or obtain extra compensation over and above the contract price.

D. MATERIAL AND WORKMANSHIP

Provide new material, equipment, and apparatus under this contract unless otherwise stated herein, of best quality normally used for the purpose in good commercial practice, and free from defects. Install material and equipment in accordance with the manufacturer's installation instructions. Model numbers listed in the specifications or shown on the drawings are not necessarily intended to designate the required trim, written descriptions of the trim govern model numbers.

Pipe, pipe fittings, pipe specialties and valves shall be manufactured in plants located in the United States or certified to meet the specified ASTM and ANSI standards.

Work performed under this contract shall provide a neat and "workmanlike" appearance when completed, to the satisfaction of the Architect and Engineer. Workmanship shall be the finest possible by experienced mechanics. Installations shall comply with applicable codes and laws.

The complete installation shall function as designed and intended with respect to efficiency, capacity, noise level, etc. Abnormal noise caused by rattling equipment, piping, ducts, air devices, and squeaks in rotating components shall not be acceptable. Materials and equipment shall be of commercial specification grade in quality. Light duty and residential grade equipment shall not be accepted unless otherwise indicated .

Remove from the premises waste material present as a result of work, including cartons, crating, paper, stickers, and/or excavation material not used in backfilling, etc. Clean equipment installed under this contract to present a neat and clean installation at the termination of the work.

Repair or replace public and private property damaged as a result of work performed under this contract to the satisfaction of authorities and regulations having jurisdiction. Provide all safety lights, guards, and warning signs required for the performance of the work and for the safety of the public.

E. MANUFACTURERS

In other articles where lists of manufacturers are introduced, subject to compliance with requirements, provide products by one of the manufacturers specified.

Where a list is provided, manufacturers are listed alphabetically and not in accordance with any ranking or preference.

Where manufacturers are not listed, provide products subject to compliance with requirements from manufacturers that have been actively involved in manufacturing the specified product for no less than 5 years.

F. COORDINATION

Coordinate work with that of other trades so that the various components of the systems are installed at the proper time, will fit the available space, and will allow proper service access to those items requiring maintenance. Components which are installed without regard to the above shall be relocated at no additional cost to the Owner.

Unless otherwise indicated, the General Contractor shall provide chases and openings in building construction required for installation of the systems specified herein. Contractor shall furnish the General Contractor with information where chases and openings are required. Contractor shall keep informed as to the work of other trades engaged in the construction of the project and shall execute work in a manner as to not interfere with or delay the work of other trades.

Figured dimensions shall be taken in preference to scale dimensions. Contractor shall take his own measurements at the building, as variations may occur. Contractor shall be held responsible for errors that could have been avoided by proper checking and inspection.

Provide materials with trim that will properly fit the types of ceiling, wall, or floor finishes actually installed. Model numbers listed in the specifications or shown on the drawings are not intended to designate the required trim.

G. ORDINANCES AND CODES

Work performed under this contract shall, at a minimum, be in conformance with applicable national, state and local codes having jurisdiction. Equipment furnished and associated installation work performed under this contract shall be in strict compliance with current applicable codes adopted by the local AHJ, including any amendments and standards as set forth by the following:
1. National Electrical Code (NEC)
2. National Fire Protection Association (NFPA)
3. Underwriters Laboratories (UL)
4. Occupational Safety and Health Administration (OSHA)
5. American Society of Mechanical Engineers (ASME)
6. American Society of Heating, Refrigerating, and Air Conditioning Engineers (ASHRAE)
7. American National Standards Institute (ANSI)
8. American Society of Testing and Materials (ASTM)
9. Other national standards and codes where applicable.

Where the contract documents exceed the requirements of the referenced codes, standards, etc., the contract documents shall take precedence. Where conflicts between various codes, ordinances, rules, and regulations exist, comply with the most stringent.

Promptly bring all conflicts observed between codes, ordinances, rules, regulations, referenced standards, and these documents to the attention of the Architect and Engineer for final resolution. Contractor will be held responsible for any violation of the law.

Procure and pay for permits and licenses required for the accomplishment of the work herein described. Where required, obtain, pay for , and furnish certificates of inspection to Owner.

H. PROTECTION OF EQUIPMENT AND MATERIALS

Store and protect from damage equipment and materials delivered to job site. For materials and equipment susceptible to changing weather conditions, dampness, or temperature variations, store inside in conditioned spaces. For materials and equipment not susceptible to these conditions, cover with waterproof, tear-resistant, heavy tarp or polyethylene plastic as required to protect from plaster, dust, dirt, paint, water, or physical damage. Replace insulation that has become wet at any time during construction. Drying the insulation is not acceptable. Seal any tears or joints of internal fiberglass insulation. Equipment and material damaged by construction activities shall be rejected and Contractor shall furnish new equipment and material of a like kind at his own expense.

Keep premises broom clean of foreign material created during work performed under this contract. Piping, equipment, etc. shall have a neat and clean appearance at the termination of the work. Remove debris from ceiling/return air plenum, including dust.

Plug, seal, or cap open ends of ductwork and piping systems while stored and installed during construction when not in use to prevent the entrance of debris into the systems. Remove temporary protection prior to starting equipment and turning the system over to the owner.

I. SUBSTITUTIONS

Materials, products, equipment, and systems described in the Bidding Documents establish a standard of required function, dimension, appearance and quality to be met by the proposed substitution. The base bid shall include only the products from manufacturers specifically named in the drawings and specifications. To request a substitution, request the Substitution Request Form from the Architect or Engineer. Complete and send the Substitution Request Form for each material, product, equipment, or system that is proposed to be substituted. The burden of proof of the merit of the proposed substitution is upon the proposer.

Unless stated otherwise in writing to the Engineer by the Contractor, Contractor warrants to the Engineer, Architect, and Owner the following:
1. Proposed substitution has been fully investigated and determined to meet or exceed the specified Work in all respects unless stated otherwise in the substitution request.
2. Proposed substitution is consistent with the Contract Documents and will produce indicated results, including functional clearances, maintenance service, and sourcing of replacement parts.
3. Proposed substitution has received necessary approvals of authorities having jurisdiction.
4. Same warranty will be furnished for proposed substitution as for specified Work.
5. If accepted substitution fails to perform as required, Contractor shall replace substitute material or system with that originally specified and bear costs incurred thereby.
6. Coordination, installation and changes in the Work as necessary for accepted substitution will be complete in all respects.

No substitutions will be considered unless the Substitution Request Form is completed and attached with the appropriate substitution documentation. No substitution will be considered prior to receipt of bids unless written request for approval to bid has been received by the Engineer at least ten (10) calendar days prior to the date for receipt of bids.

If the proposed substitution is approved prior to receipt of bids, such approval will be stated in an addendum. Bidders shall not rely upon approvals made in any other way. Verbal approval will not be given. No substitutions will be considered after the contract is awarded unless specifically provided in the contract documents.

J. SUBMITTALS

Assemble and submit for review shop drawings, material lists, manufacturer product literature for equipment to be furnished, and items requiring coordination between contractors under this contract. Provide submittals in sufficient detail so as to demonstrate compliance with these contract documents and the design concept. Prior to transmitting submittals, verify that the equipment submitted is mutually compatible and suitable for the intended use, will fit the available space, and maintain manufacturer recommended service clearances. If the size of equipment furnished makes necessary any change in location or configuration, submit a shop drawing showing the proposed layout.

Transmit submittals as early as required to support the project schedule. Allow for two weeks Engineer review time , plus to/from mailing time via the Architect, plus a duplication of this time for resubmittal , if required. Only resubmit those sections requested for resubmittal.

Submittals shall contain the project name, applicable specification section, submittal date, equipment identification acronym as used on the drawings, and the Contractor's stamp. The stamp shall certify that the submittal has been checked by the Contractor, complies with the drawings and specifications, and is coordinated with other trades. Manufacturer product literature shall include shop drawings, product data, performance sheets, samples and other submittals required by this division. Highlight, mark, list , or indicate the materials, performance criteria, and accessories that are being proposed. General product catalog data not specifically noted to be part of the specified product will be rejected and returned without review.

Submittals and shop drawings shall not contain the firm name, logo, seal, or signature of the Engineer. They shall not be copies of the work product of the Engineer. If the Contractor desires to use elements of such product, refer to paragraph "Electronic Drawing Files" for procedures to be used.

Separate submittals according to individual specification sections. Illegible submittals will be rejected and returned without review. Catalog data shall be properly bound, identified, indexed and tabbed in a 3-ring binder. Each item or model number shall be clearly marked and accessories indicated. Label the catalog data with the equipment identification acronym or number as used on the drawings and include performance curves, capacities, sizes, weights, materials, finishes, wiring diagrams, electrical requirements and deviations from specified equipment or materials. For equipment with motor starters or VFDs, include short circuit current ratings. Mark out inapplicable items. Shop drawings will be returned without review if the above mentioned requirements are not met.

Provide the quantity of submittals required by Division 01. If not indicated and hard-copy sets are provided, submit a minimum of six (6) copies. Refer to Division 01 for acceptance of electronic submittals for this project. For electronic submittals, Contractor shall submit the documents in accordance with the procedures specified in Division 01. Contractor shall notify the Architect and Engineer that the submittals have been posted. If electronic submittal procedures are not defined in Division 01, Contractor shall include the website, user name, and password information needed to access the submittals. For submittals sent by e-mail, Contractor shall copy the designated representatives of the Architect and Engineer. Contractor shall allow for the Engineer review time as specified above in the construction schedule. Contractor shall submit only the documents required to purchase the materials and/or equipment in the electronic submittal .

The checking and subsequent acceptance of submittals by the Engineer and/or Architect shall not relieve the Contractor from responsibility for deviations from the drawings and specifications, errors in dimensions, details, size of members, or quantities, omissions of components or fittings; coordination of electrical requirements; and not coordinating items with actual building conditions and adjacent work. Proceed with the procurement and installation of equipment only after receiving approved shop drawings relative to each item.

K. ELECTRONIC DRAWING FILES

In preparation of shop drawings or record drawings, Contractor may, at his option, obtain electronic drawing files in AutoCAD or DXF format on CD-ROM disk, DVD disk, flash drive or direct download, as desired, from the Engineer for a shipping and handling fee of $200 for a drawing set up to 12 sheets and $15 per sheet for each additional sheet. Contact the Architect for written authorization and Engineer for the necessary release agreement form and to specify shipping method and drawing format. In addition to payment, the written authorization from the Architect and release agreement form from the Engineer must be received before electronic drawing files will be sent.

L. RECORD DRAWINGS (AS-BUILT DRAWINGS)

During progress of the work in this division, Contractor shall maintain an accurate record of all changes made during the installation of the system. Upon completion of the work, accurately transfer all record information to three identical sets of the approved shop drawings. Insert one set into each copy of the manual described below.

See Division 01 and General Conditions for additional information.

M. OPERATION AND MAINTENANCE INSTRUCTIONS

During the course of construction, collect and compile a complete brochure of equipment furnished and installed on this project. Include operational and maintenance instructions, manufacturer's catalog sheets, wiring diagrams, parts lists, approved submittals and shop drawings, warranties, and descriptive literature as furnished by the equipment manufacturer. Include an inside cover sheet that lists the project name, date, Owner, Architect, Engineer, General Contractor, Sub-Contractor, and an index of contents.

Submit three copies of literature bound in approved binders with index and tabs separating equipment types to the Architect , for Engineer's review, at the termination of the work. Paper clips, staples, rubber bands, loose-leaf binding, and mailing envelopes are not considered approved binders. Final approval of systems installed under this contract shall be withheld until this equipment brochure is received and deemed complete by the Architect and Engineer. Instruct workmen to save required literature shipped with the equipment itself for inclusion in this brochure.

Include Record Drawings as described above.

Refer to Division 01 for acceptance of electronic manuals for this project. For electronic manuals, refer to paragraph "Submittals" for requirements.

N. SPARE PARTS

Furnish to Owner, with receipt, the following spare parts for the equipment furnished for this project:
1. One set of spare filters of each type required for each unit. In addition to the spare set of filters, install new filters prior to testing, adjusting, and balancing work and before turning system over to Owner.
2. Furnish one complete set of belts for each fan.
3. Furnish three operating keys for each type of air outlet and inlet that require them.

O. TRAINING

At a time mutually agreed upon between the Owner and Contractor, provide the services of a factory trained and authorized representative to train Owner's designated personnel on the operation and maintenance of the equipment provided for this project.

Provide training to include, but not be limited to, an overview of the system and/or equipment as it relates to the facility as a whole; operation and maintenance procedures and schedules related to startup and shutdown, troubleshooting, servicing, preventive maintenance and appropriate operator intervention; and review of data included in the operation and maintenance manuals.

Submit a certification letter to the Architect stating that the Owner's designated representative has been trained as specified herein. Letter shall include date, time, attendees and subject of training. The Contractor and the Owner's representative shall sign the certification letter indicating agreement that the training has been provided.

Schedule training with Owner with at least 7 days advance notice.

P. WARRANTIES

Warrant each system and each element thereof against all defects due to faulty workmanship, design or material for a period of 12 months from date of Substantial Completion, unless specific items are noted to carry a longer warranty in the construction documents or manufacturer's standard warranty exceeds 12 months. Remedy all defects, occurring within the warranty period(s), as stated in the General Conditions and Division 01.

Warranties shall include labor and material. Where an equipment manufacturer warrants material only, the mechanical contractor shall warrant labor for a period of 12 months from date of substantial completion and make repairs or replacements without any additional costs to the Owner.

Perform the remedial work promptly, upon written notice from the Engineer or Owner.

At the time of Substantial Completion, deliver to the Owner all warranties, in writing and properly executed, including term limits for warranties extending beyond the one year period and any actions the Owner must take in order to maintain warranty status. Each warranty instrument shall be addressed to the Owner and state the commencement date and term.

2. GENERAL MATERIALS AND INSTALLATION

A. BUILDING OPERATION

Comply with the schedule of operations as outlined in the architectural portions of this specification. Accomplish work requiring interruption of building operation at a time when the building is not in operation and only with written approval of building Owner and/or tenant. Coordinate interruption of building operation with the Owner and/or tenant a minimum of seven (7) days in advance of work.

B. EXISTING EQUIPMENT REUSE AND REMOVAL

Remove all unused equipment, ductwork, piping, and associated supports. Cap ductwork and piping at mains and seal air and water tight.

Provide items of HVAC systems modification required because of building remodeling, as noted on the drawings or necessary for proper operation. Match existing materials and construction techniques when modifying existing systems unless specified otherwise. Coordinate additional requirements with General Contractor and Architect.

C. COINCIDENTAL DAMAGE

Repair streets, sidewalks, drives, paving, walls, finishes, and other facilities damaged in the course of the work. Repair materials shall match existing construction. Repair work shall meet all requirements of the Owner, local authorities having jurisdiction , and meet the satisfaction of the Architect.

D. CUTTING AND PATCHING

Conform to the requirements in Division 01. Cut walls, floors, ceilings, and other portions of the facility as required to install work under this division. Obtain permission from the Architect prior to cutting. Do not cut or disturb structural members without prior approval from the Architect and Structural Engineer. For post-tension slabs, x-ray slab and closely coordinate all core drill locations with Architect and Structural Engineer prior to performing any work. Obtain approval from Architect and Structural Engineer for all core drills and penetrations at least four days prior to performing work. Penetrations shall be made as small as possible while maintaining required clearances between the building element penetrated and the system component. Patch around openings to match the adjacent construction including fire ratings, if applicable. Repair and refinish areas disturbed by work to the condition of adjoining surfaces in a manner satisfactory to the Architect.

E. ROUGH-IN

Coordinate without delay all roughing-in with other divisions. Conceal piping , conduit, and rough-in except in unfinished areas and where otherwise shown.

F. STRUCTURAL SUPPORT SYSTEMS

Structural steel used for support of equipment, ductwork and piping shall be new, clean, and conform to ASTM Designation A-36.

Support mechanical components from the building structure. Do not support mechanical components from ceilings, other mechanical or electrical components, and other non-structural elements.

G. PRE-ENGINEERED ROOF EQUIPMENT SUPPORTS AND CURBS

Provide prefabricated equipment support rails and roof curbs manufactured by AES Industries, Custom Curb, Inc., Pate Company, Thybar or approved equal. Provide with fully mitered raised cant and step to match roof insulation thickness, welded, minimum 18 gauge galvanized steel shell, internally reinforced to load bearing factors of equipment being supported, minimum 1-1/2 inch thick, 3 pound rigid insulation internal to shell to maintain continuous roof insulation where required, factory installed wood nailer , and minimum 18 gauge jacket with counterflashing where equipment does not fully cover the equipment support. Provide sloped roof equipment supports to enable level installation. Provide rigid backing material behind cant to maintain cant slope. Provide multiple support rails to uniformly support the equipment. Attach to roof structure according to manufacturer's installation instructions.

Attach equipment directly to pre-engineered roof equipment support using one of the following methods:
1. Roof Curbs: Secure each corner of the equipment to the curb nailer using a minimum of 4 lag screws, located along the length of the equipment. Alternatively, Secure equipment to the curb using hold-down brackets. Provide minimum 6 inch long, 14 gauge galvanized steel brackets sized to wrap around top of curb and under equipment base rail with sufficient horizontal offset to cover overlap gap between the equipment rail and curb. Secure bracket to equipment and curb nailer using a minimum of 8 points of connection per bracket. Provide one bracket at each corner along the length of the unit.

H. PENETRATIONS

Seal elevated floor, exterior wall and roof penetrations watertight and weathertight with non-shrink, non-hardening commercial sealant. Pack with mineral wool and seal both ends with minimum of 1/2 inch of sealant.

Provide prefabricated roof curbs where pipes and or ductwork penetrate elevated slabs or the roof to the exterior. Provide cover over curb of weather-resistant material and seal duct or pipe penetrations through the cover. Provide pipe collar of weather-resistant material with stainless steel pipe clamps for piping penetrations.

Provide box frames for rectangular openings welded 12 gauge galvanized steel attached to forms and of a maximum dimension established by the Architect. Notify the General Contractor or Architect before installing any box openings not shown on the Architectural or Structural drawings.

I. EQUIPMENT FURNISHED BY OTHERS

Provide necessary equipment and accessories that are not provided by the equipment supplier or Owner to complete installation of equipment furnished by others in locations as indicated on the drawings, specified herein, or both. Equipment and accessories not provided by the equipment supplier may include, but not be limited to flues, vents, intakes, associated roof jacks and caps to outdoors, dampers, in-line fans, roof fans, and control interlocks, etc. as required for proper operation of the complete system in accordance with the manufacturer's instructions.

Contractor shall be responsible for correct rough-in dimensions and shall verify them with Architect and/or equipment supplier prior to service installations.

J. SYSTEM TESTING, ADJUSTING, AND BALANCING

Upon completion of each phase of the installation, test each system in conformance with local code requirements and as noted below. Furnish labor and equipment required to test each system installed under this contract. Assume all costs involved in making the tests and repairing and/or replacing any damages resulting therefrom.

Final system testing, balancing and adjustments (TAB) shall be performed by a Contractor certified by the National Environmental Balancing Bureau (NEBB), Associated Air Balance Council (AABC), or Testing, Adjusting and Balancing Bureau (TABB). TAB shall be performed in accordance with the most current edition of the certified agencies procedural standard for testing, adjusting and balancing and shall comply with the strictest interpretation of that standard for execution and reporting of all TAB work.

Test, adjust, and balance equipment and systems included in the scope of work. Prepare testing and balancing report log using forms equivalent with the standard forms available from the TAB certification standard being followed. Adjust equipment to deliver specified flow amounts on the drawings. For air systems, include airflow supply quantities, entering and leaving temperatures , and pressures at design flow. For hydronic systems, include entering and leaving temperatures and pressures at design flow. Include fan and unit test readings, motor voltage and amp draws, etc., and submit six copies of the final compilation of data to the Architect for evaluation and approval before final inspection of the project.

Balance air systems to within plus or minus 10 percent for terminal devices and branch lines and plus or minus 5 percent for main ducts and air handling equipment of the amount of air shown on the drawings. TAB Contractor shall record space temperatures and make adjustments in airflow to each diffuser to obtain uniform temperature (no greater than +/- 3 F) in spaces. Document temperatures and adjustments in tab report. Balance hydronic systems to provide flow rates within plus or minus 5 percent of flow specified on drawings or as required for proper system operation. Adjust equipment to operate as intended by the specification. TAB report shall include a 'report summary/remarks' section in accordance with the procedural standard that provides both system set up and a summary of deficiencies as defined by the procedural standard..

TAB Contractor shall be responsible to calibrate, set, and adjust automatic temperature control sensors, actuators and control devices. Check proper sequencing of interlock systems, and operation of safety controls, adjust thermostats, and control setpoints, limits and time based adjustment to operate in accordance with the performance requirements of the Construction Documents. Adjust pumps, fans, etc. for proper and efficient operation. Certify to Architect that adjustments have been made and that system is operating satisfactorily. Calibrate, set, and adjust automatic temperature controls. Check proper sequencing of interlock systems, and operation of safety controls.

Division 23 contractor shall align bearings and replace bearings that have dirt or foreign material in them with new bearings without additional cost to the Owner.

K. VIBRATION ISOLATION

Provide vibration isolation equipment and materials by a single manufacturer. If type and deflection for specific equipment is not specified within the contract documents, reference ASHRAE Handbook "HVAC Applications" or provide per manufacturer's recommendations. Approved manufacturers include Caldyn, Kinetics Noise Control, Mason Industries, Inc., Vibration Eliminator Co., Inc., Vibration Mounting and Controls, or Vibro-Acoustics, provided their systems are in compliance with the specified design and performance requirements.

General Requirements: Select vibration isolators by the weight distribution to produce uniform deflection. Vibration isolators shall have either known un-deflected heights or calibration markings so that, after adjustment, the static deflection can be verified, thus determining that the load is within the proper range of the isolator. Isolators shall operate in the linear portion of their load versus deflection curves. Spring isolators shall have 50 percent excess capacity without becoming coil bound. Coat vibration isolators with factory-applied paint. Coat vibration isolators exposed to weather and other corrosive environments with factory-applied corrosion resistance protection. Install and adjust vibration isolators in accordance with manufacturers written instructions.

Pipe connections. Provide flexible connectors for piping system connections on equipment side of shutoff valves for all pumps, mechanical equipment supported or suspended by spring isolators, and where indicated on drawings . Fabricate flexible piping connectors from stainless steel or rubber materials as suitable for system fluid. Flexible piping connectors shall be bellows, spherical or braided hose type as recommended by the manufacturer for the application.

Isolator Types:

1. Type CMB (Curb Mounted Base): Curb mounted base for roof_mounted equipment shall be a pre-engineered structural steel frame mounted directly to the structure with an upper floating section on adjustable steel springs. The upper frame shall provide continuous support for the equipment. Steel springs shall rest on minimum 1/4 inch thick elastomeric pads and have a minimum static deflection of 2 inches unless otherwise specified. All_directional elastomeric snubber bushings shall be minimum 1/4 inch thick. All hardware shall be cadmium or zinc electroplated to provide a rust resistant finish. Provide continuous galvanized flexible counterflashing nailed over the lower curb's waterproofing and joined at the corners by elastomeric bellows. All spring locations shall have access ports with removable waterproof covers to allow for adjustment or replacement of springs. Lower curbs shall have provision for 2 inches insulation. Duct connections shall be made using a length of flexible duct dimensioned to match the equipment opening, using a foam rubber gasket to seal against the unit bottom. Provide Mason Industries Type RSC or equal. For equipment support bases installed on the roof, coordinate with the pre-engineered roof equipment support manufacturer to determine the quantity and size of hold-down brackets, isolators, and fasteners, with installation instructions, for each equipment to meet the design requirements specified under Article, "PRE-ENGINEERED ROOF EQUIPMENT SUPPORTS AND CURBS."

2. Type NR (Neoprene Bushing): Provide neoprene, rubber-in-shear bushings for lightweight (less than 100 pounds) , suspended equipment supported from structure with all thread rod and angle iron or Unistrut. Select for a maximum durometer of 50 and designed for 15 percent strain, with a static deflection of 0.15 inches. Provide Mason Industries Type HMIB or equal.

L. AIR FILTERS

Provide AP-Thirteen, pleated, throwaway type filters, minimum MERV 13, or similar as manufactured by Air Filter, Inc., American Air Filter, Flanders, or approved equal, unless otherwise indicated.

Temporary filters used to protect openings in ductwork and inside equipment when permanent HVAC equipment is used during the construction period shall be pleated, throwaway type filters, minimum MERV 6.

M. IDENTIFICATION

Provide manufacturer's standard laminated plastic, color coded equipment markers. Conform to the following color code: Green for Cooling; Yellow for Heating; Yellow/Green for combination Cooling and Heating; Brown for Energy Reclamation; Blue for other equipment types. Conform to ANSI A13.1 for Hazardous Equipment.

Provide stenciled signs for equipment identification at Contractor's option or where distance of required identification requires lettering larger than 1 inch height. Stencil paint shall be exterior type, oil-based, alkyd enamel, minimum 1-1/4 inch height or greater as required for long distance identification, white or black color for best contrast.

3. DUCT INSULATION, DUCTWORK, ACCESSORIES, FLUES AND FANS

A. DUCT INSULATION

Provide fiberglass duct liner with fibers firmly bonded together with a thermosetting resin. Liner surface shall serve as a barrier against infiltration of dust and dirt, shall meet ASTM C1338 for fungi resistance, and shall be cleanable using duct cleaning methods and equipment outlined by North American Insulation Manufacturers Association (NAIMA) duct cleaning guide. Install with liner adhesive and mechanical fasteners in accordance with manufacturer's instructions and recommendations. Ductwork sizes shown on drawings are inside clear dimensions. Increase sheet metal by liner thickness in both directions where liner is installed.

Provide rectangular liner conforming to ASTM C1071, Type I or II that is 1 inch thick, 1-1/2 pound density, minimum R-4.2Certainteed Corp. "Toughgard" or equivalent, Johns Manville, Owens-Corning, or Knauf.

Provide round liner that is 1 inch thick, 4 pound density, minimum R-4.3 Johns Manville "Spiracoustic Plus" or equivalent, Certainteed or Owens-Corning.

Provide liner on the following interior air ducts and where specified on the drawings:

1. Exposed round and rectangular supply ductwork and the first 15 feet of duct downstream of equipment outlets or 5 feet past first elbow, whichever is greater.
2. All return ductwork.

At interface of lined and wrapped ductwork, overlap lined ductwork at least 2 feet beyond wrapped insulation.

Cover concealed, rigid ductwork with ASTM C553, Type II flexible fiberglass insulation. Installed insulation shall be 1-1/2 inch thick, 3/4 pound density, minimum R-4.2 duct wrap, Certainteed or equivalent Johns Manville, Owens-Corning , or Knauf with heavy-duty foil-scrim-kraft facing, and with joints taped with 3 inch wide foil tape as follows:

1. Unlined supply and return air ductwork.
2. Round and rectangular exhaust and relief air ductwork within 10 feet of exterior discharge.

Cover Outdoor air, Exhaust air and Relief air plenums connected to exterior louvers with 1-1/2 inch thick, 1.5 pound density, rigid fiberglass insulation conforming to ASTM C612, Class 2.

Insulating materials, adhesives, coatings, etc., shall not exceed flame spread rating of 25 and smoke developed rating of 50 per ASTM E84. Containers for mastics and adhesives shall have U.L. Label.

B. PLENUM INSULATION

Provide Fyrewrap 0.5 plenum insulation or ETS Schaefer Plenumshield blanket to encapsulate combustible materials located within a fire-rated return air plenum where permitted by AHJ. Plenum insulation shall be 1/2 inch thick, 6 to 8 PCF density, consisting of a high temperature bio-soluble material with aluminum foil encapsulating material and fiberglass reinforcing scrim covering. Plenum insulation shall be rated and certified per UL 1887 (modified), ASTM E136 for non-combustibility and ASTM E84/UL 723 for surface burning characteristics. Provide minimum 1 inch overlap at all seams and joints and secure insulation with stainless steel banding at locations and intervals per manufacturer's instructions.

C. DUCTWORK

Provide galvanized steel ductwork and housings as shown on drawings. Construct ductwork including fittings and transitions in conformance with current SMACNA standards relative to gauge, bracing, joints, etc. Minimum thickness of duct shall be 26-gauge sheet metal. Reinforce housings and ductwork over 30 inches with 1-1/4 inch angles not less than 5'-6" on centers, and closer if required for sufficient rigidity to prevent vibration. Support horizontal runs of duct from strap iron hangers on centers not to exceed 8'-0". Do not support ceiling grid, conduits, pipes, equipment, etc. from ductwork. Coordinate routing of ductwork with other contractors such that piping, electrical conduit, and associated supports are not routed through the ductwork.

Construct non-VAV supply ducts to meet SMACNA positive pressure of 2 inches w.g. Construct Return, Outdoor and Exhaust ductwork upstream of fans to meet SMACNA negative pressure of 1 inch w.g. Construct exhaust ductwork downstream of fans to meet SMACNA positive pressure of 1 inch w.g.

Provide mill phosphatized or galvanealed finish for exposed ductwork to be field painted. Shop treated sheet metal shall have galvanized metal primer applied in the shop after fabrication and prior to shipping.

Seal ductwork with heavy liquid sealant, Hardcast Irongrip 601, Design Polymer DP 1010 , United Mcgill duct sealer or approved equal, applied according to sealant manufacturer's instructions. Seal all longitudinal and transverse ductwork joints airtight to meet SMACNA Seal Class A. Tapes and mastics shall be listed and labeled in accordance with UL 181A.

Provide radius elbows, turns, and offsets with a minimum centerline radius of 1-1/2 times the duct width. Where space does not permit full radius elbows, provide short radius elbows with a minimum of two continuous splitter vanes. Vanes shall be the entire length of the bend. Provide mitered elbows where space does not permit radius elbows, where shown on the drawings, or at the option of the contractor with the engineer's approval. Mitered elbows less than 45 degrees shall not require turning vanes. Mitered elbows 45 degrees and greater shall have single thickness turning vanes of same gauge as ductwork, rigidly fastened with guide strips in ductwork. Vanes for mitered elbows shall be provided in all supply and exhaust ductwork and in return and outside air ductwork that has an air velocity exceeding 1000 fpm. Do not install vanes in grease ductwork. The use of square throat, radius heel elbows is prohibited. Remove and replace all installed elbows of this type with an approved elbow at no additional cost to the owner.

Connect ducts to vibrating equipment and when transitioning between two different metallic duct materials (e.g., aluminum to galvanized steel) by means of flexible connectors. Flexible connectors shall be neoprene coated glass cloth canvas connections, Duro-Dyne, Elgen, Ventfabric or equal. Flexible connectors shall have a flame spread of 25 or less and smoke developed rating not higher than 50. Make airtight joints and install with minimum 1-1/2 inches slack.

Provide balancing dampers, manufactured by Cesco, Greenheck, Louvers & Dampers, Nailor Industries, Pottorff, Ruskin, Tamco, or approved equal, where shown on drawings and wherever necessary for complete control of air flow. Splitter dampers shall be controlled by locking quadrants; provide Young Regulator or Ventlok end bearings for the damper rod. Rectangular volume dampers shall be opposed blade interlocking type. Round volume dampers shall be single-blade type consisting of circular blade mounted to a shaft. Provide Flexmaster model STO or equal 45 degree rectangular/round side takeoff fitting with model BO3 damper with locking quadrant and insulation build out for round ductwork branch takeoffs to individual air devices. Omit damper at takeoff fitting when damper is located downstream of takeoff.

Where access to dampers through a hard ceiling is required, provide a concealed, remote cable-operated, butterfly-type volume damper assembly with external worm gear operator. Damper assembly shall include duct casing with rolled bead stiffeners, reinforced blade, self-lubricating bearing, and remote operator mounting plate. External operator shall attach to damper as a single piece with no linkage adjustment required. Damper shall be adjustable through the diffuser frame with standard 1/4 inch nutdriver or flat screwdriver. Provide positive, direct, two-way damper control with no sleeves, springs or screw adjustments to come loose after installation. Provide cable length to span the distance from the damper to the remote operator location. Install damper in branch duct. Do not install in diffuser neck. Install remote operator on the back of the diffuser frame or side of a slot diffuser plenum. Support cable assembly to avoid bends and kinks in cable at manufacturer recommended intervals. Where approved by architect, a ceiling cup with cover plate may be used for access to cable operator. Provide round dampers by Metropolitan Air Technology model RT-250, Young's Regulator model 5020-1200, or approved equal. Provide rectangular dampers by Metropolitan Air Technology model RT-200, Young's Regulator model 820-1200, or approved equal. Provide remote cable control by Metropolitan Air Technology model RT-WGA, Young's Regulator model 270-275, or approved equal .

Round or oval ductwork shall be FlaktGroup Semco, United, Hercules Industries or equal, sheetmetal, with smooth interior surface, with low pressure (duct pressure class up to and including 2 inches w.g.) Round ductwork gauges per the following table (reference SMACNA HVAC duct construction standards for gauges when pressures exceed 2 inches w.g.):

Size	Duct Gauge	Fitting Gauge
14" & under	26	24
15" thru 26"	24	22

Lewis & Lambert, Linx Industries Lindab Safe, or approved equal factory-manufactured round ductwork and fittings may be substituted for specified round branch ductwork, at Contractors option. Heavy liquid joint sealant may be omitted on factory-manufactured round ductwork.

Low pressure (duct pressure class up to and including 2 inches w.g.) Fittings 24 inches in diameter and less shall be prefabricated, spot-welded and internally sealed. Continuously weld fittings larger than 24 inches in diameter. Fitting gauge shall be 22 gauge for 36 inch fittings and under, 20 gauge for larger sizes. 90 degree tees shall be conical type. Seal longitudinal and transverse ductwork joints airtight with heavy liquid sealant applied according to manufacturer's instructions. Provide gauge thickness in medium pressure (duct pressure class 3 inches to 6 inches w.g.) ductwork as recommended by SMACNA.

If permanent HVAC equipment is used during the construction period, provide temporary filters at all openings in the ductwork and inside equipment to protect the system from dust, dirt, paint, and moisture. Replace and maintain filters when needed, but not less than every month. On the day of Substantial Completion, clean the unit and ductwork and provide a new set of filters in the unit. Refer to section "Air Filters" for filter requirements.

An independent, professional duct cleaning company shall vacuum clean all internal surfaces of equipment, coils, and ductwork connected to permanent HVAC units that are operated during the construction period. Conduct cleaning after new air filters are installed and prior to turning the system over to the owner.

D. FABRIC DUCT

Fabric duct shall be Prihoda NMI with perforations and adjustable flow devices at openings or approved equal fabric air dispersion system. Fabric shall be a coated, woven, and fire retardant. Fabric shall be 100% polyester and colored white or as specified on the drawings. Coating shall be a non-air permeable coating. Fabric and coating must weight 7.7 oz/square yard per ASTM D3776 and provide an air permeability of 0 cfm/square foot per ASTM D737. Fabric and coating shall have a temperature range of 0 to 180 degrees Fahrenheit and shall be classified by Underwriters Laboratories in accordance with the flame spread/smoke developed requirements of NFPA 90A and UL 2518.

Fabric ducts shall be suspended using Prihoda internal aluminum rings support. Hardware shall include cable, eye bolts, thimbles, cable clamps, and turnbuckles as required. Fabric duct attachment shall be made to support using nylon cable clips spaced at 24 inches. Install chosen suspension system in accordance with the requirements of the manufacturer.

Clean air handling equipment and ductwork prior to installing fabric ductwork. Clean external surfaces of foreign substance which may cause corrosive deterioration of facing. Ends of ducts which are not connected to equipment or distribution devices at time of ductwork installation shall be covered with polyethylene film or other covering to keep the system clean until installation of fabric duct is completed. If fabric duct becomes soiled during installation, it should be removed and cleaned following the manufacturer's standard terms of laundry.

E. FLEXIBLE DUCT

Low pressure (duct pressure class up to and including 2 inches w.g.) and medium pressure (duct pressure class 2.1 inch to 6 inches w.g.) flexible duct shall be Flexmaster type 8B, Thermaflex type G-KM, M-KE, JPL type Silver Jacket, or equal (fire retardant polyethylene) protective vapor barrier, U.L.181 Class 1, acoustical insulated duct, R-4.2 fiberglass insulation. Provide CPE liner with steel wire helix mechanically locked or permanently bonded to the liner.

Flexible duct runs shall not exceed 5 feet in length, and shall be installed fully extended and straight as possible avoiding tight turns. Install flexible duct in accordance with manufacturer's instructions. Support flexible duct at maximum 5 feet on center and within 6 inches of bends. Bends shall not exceed a centerline radius of one duct diameter. Duct sag shall not exceed 1/2 inch. Supporting material in direct contact with the duct shall not be less than 1-1/2 inches in width.

Connect flexible duct to rigid metal duct or air devices as recommended by the manufacturer. At a minimum, install two wraps of duct tape around the inner core connection and a metallic or non-metallic clamp over the tape and two wraps of duct tape or a clamp over the outer jacket. Duct clamps shall be labeled in accordance with UL-181B and marked 181B -C. Duct tape shall be labeled in accordance with UL 181B and marked 181B-FX.

F. AIR DEVICES

Provide air devices as scheduled on drawings, manufactured by E.H. Price or Titus. VAV diffusers shall be by E.H. Price only. All other air devices shall be by Titus. No substitutions are permitted. Select air devices to limit room noise level to no higher than NC-30 unless otherwise shown. Provide devices with a soft plastic gasket to make an airtight seal against the mounting surface. Coordinate final location, frame, and mounting type of air devices with architectural reflected ceiling plans.

Submit complete shop drawings including information on noise level, pressure drop, throw, CFM for each air device, styles, borders, etc. Clearly marked with specified equipment number. Submit samples of each air device as requested by the Engineer .

Provide wall return air grilles and exhaust air registers with horizontal 35 or 45 degree angle vision-proof bars. Provide concealed fasteners for wall mounted registers and grilles. Provide floor supply air registers of aluminum heavy duty type with 0 degree deflection. Provide opposed blade dampers for supply air registers and exhaust air registers unless indicated otherwise.

Provide ceiling mounted air devices of lay-in or surface mounted type as required to be compatible with ceiling construction. Provide ceiling diffusers and grilles with white enamel finish unless noted otherwise.

G. CONTROL DAMPERS

Motorized dampers used for ventilation air intake, exhaust air, or relief air shall have leakage rates not to exceed 4.0 CFM/square foot in full closed position at 1 inch W.G. pressure differential across the damper.

Provide dampers as manufactured by Greenheck, CESCO, Pottorff, Nailor, or Ruskin. Reference manufacturer with model number is Ruskin CD-35 constructed of galvanized steel.

Coordinate with Comfort Systems to provide damper operator for each automatic damper with sufficient capacity to operate the damper under all conditions and to guarantee tight close-off of dampers against system pressure encountered. Each operator shall be provided with spring-return for normally closed or normally open position for fail safe operation to account for fire, low temperatures, or power interruption as required by the sequence of operation.

H. SMOKE DETECTORS

Duct Mounted Smoke Detector: Provided by division 28.

I. LOUVERS, PLENUMS, SCREENS

Provide screens on ducts, fans, and openings to the outdoors as scheduled and/or noted on the drawings. Insect screens shall be 0.009 thickness, 1/4 inch mesh, stainless steel wire. Bird screens shall be 0.047 inch, 1/2 inch mesh stainless steel wire. Provide motorized control dampers or backdraft dampers where shown on the drawings.

J. EXHAUST AIR SYSTEMS

Provide roof mounted exhaust fans as scheduled on the drawings, or equal ACME, Carnes, Cook, Greenheck, Pennbarry, or Twin City Fans complete with aluminum housing, aluminum centrifugal wheel, motor with integral thermal overload protection, disconnect switch mounted inside the housing, birdscreen, integral motorized damper, fan speed controller and pate prefabricated roof curb.

Provide in-line (duct) mounted exhaust fans as scheduled on the drawings, ACME, Carnes, Cook, Greenheck, Pennbarry, or Twin City Fans complete with isolated blower unit and ceiling grille. Provide backdraft damper, discharge duct, and vibration isolation as scheduled or shown on the drawings.

4. HVAC EQUIPMENT

A. ROOFTOP UNITS (GAS FIRED HEAT) 3-25 TONS

Provide electric cooling, electric heating rooftop units as scheduled on the drawings, manufactured by Carrier, complete with factory installed direct-drive hermetic compressors with internal spring vibration isolation, built-in motor thermal overload protection, crankcase heater, and low pressure switches; direct expansion cooling and condensing coils, minimum SEER or EER rating (cooling) as required by the applicable energy code or greater if scheduled on the drawings, centrifugal evaporator blower; air filter rack with 2 inch thick throwaway filters, propeller type condenser fan; aluminized steel heat exchanger, minimum AFUE rating (heating) as required by the applicable energy code or greater if scheduled on the drawings, forced combustion air blower; complete factory installed micro-processor controls including anti-short cycle timers, time delay relays and minimum "on" time controls, 100 percent safety gas shutoff, direct spark ignition system; built-in thermal overload protection on motors and compressors; outdoor air damper; barometric relief damper or power relief fan as scheduled; hot gas reheat for dehumidification control sequence; weathertight housing constructed of zinc coated, heavy gauge, galvanized steel with weather-resistant baked enamel finish; minimum insulated downflow standard roof curb with minimum height of 12 inches for roofs with no insulation, 14 inches for roofs with insulation or as scheduled on the drawings; single point electrical power connection. Provide sloped roof curb as required to match slope of roof structure so that unit is installed level. Provide guards or louvered panels to protect the condenser coil from hail or other damage. Provide a 125 VAC, 20 amp duplex convenience receptacle mounted to unit ready for field wiring with a cover UL listed for wet and damp locations when in use. Provide unit complete with manufacturer's one year guarantee on components plus an additional four year guarantee on the compressors and heat exchangers. For units equipped with an economizer assembly, the assembly shall be covered with minimum 5 year manufacturer warranty, certified to operate through 60,000 damper opening and closing cycles, and certified to meet leakage requirements specified under the section, "Control Dampers."

5. TEMPERATURE CONTROLS

A. GENERAL REQUIREMENTS

Coordinate with Comfort Systems USA to provide a complete system of temperature controls including thermostats, temperature sensors, humidity sensors, carbon dioxide (CO2) sensors, relays, and outdoor sensor assembly where indicated on the drawings and as specified by Comfort Systems USA.

Comfort Systems USA shall submit shop drawings of equipment provided for temperature control. Submit operation and maintenance data, including trouble-shooting maintenance guide, step-by-step procedures indexed for each controller and thermostat function, inspection period, cleaning methods and materials, and calibration tolerances.

Comfort Systems USA shall provide integrated wiring diagrams showing interconnections between field installed equipment and package wiring furnished with the HVAC equipment. Control wiring shall be sized to accommodate the voltage drop associated with the distance between the control device and the controller.

Comfort Systems USA shall provide supervision and on-job checkout service as required to ensure that installation and operation of the temperature control system meets requirements of the drawings, specifications, and sequences of operation. The system shall be guaranteed for a period of one year following the acceptance of the system by the Architect/Engineer. Correct defects occurring during this period at no additional cost to the Owner.

Division 26 shall install control devices with top of device at 48 inches AFF to meet ADA requirements unless otherwise noted on the plans.

A. BUILDING AUTOMATION CONTROL EQUIPMENT

Control protocol shall be based upon BACnet protocol complying with ASHRAE Standard 135. Physical/Data Link communication bus between controllers shall be EIA 485 twisted cable pair according to Master Slave/Token Passing (MS/TP) protocol or Ethernet according to ISO 8802-2 protocol.

Controller shall have the following features: Microprocessor with sufficient memory to support the controller's operating system, database, and programming requirements; real-time clock for scheduling; self-diagnostics; capability of standalone operation if network communication is lost; logging capability; service communication port for local connection to a portable operator's terminal; local keypad and display for interrogating and editing controller data; diagnostic LEDs for power, communication and processor; non-volatile memory which is capable of maintaining all BIOS and programming information for a minimum of 72 hours; power and noise immunity; and surge and transient protection.

Controller software shall support the following applications: System security restricting modification without password; object scheduling with daily, weekly, annual, holiday, and exception events; alarm reporting via text message or email and logging; maintenance management; sequencing; PID control characteristics; staggered starting of equipment; anti-short cycling; on-off control with differential; trending; run-time, pulse, and event totalization.

Provide front end controller for supervisory control of HVAC system through EMS. Controller shall provide integrated control, supervision, data logging, alarming and scheduling with a power input of 24 VAC.

Provide control panels listed according to UL 508A and NEMA rated according to its installation location. Provide common keying for all panels.

B. WIRING

Refer to Division 26 drawings for electrical and control wiring.

C. THERMOSTATS, SENSORS AND RELAYS

Provide general-purpose type elements for use in input and output sensors. Provide transmitters or transducers with sensor as required, compatible with the controllers used, with range suitable for the systems encountered. Transmitters and transducers shall have offset and span adjustments, temperature compensation, shock and vibration immunity, and zeroing capability. Accuracy requirements shall include the combined effects of linearity, hysteresis, repeatability, and the transmitter.

Dry-bulb temperature sensors at a minimum shall be accurate to +/- 2 degrees Fahrenheit over the range of 40 to 80 degrees Fahrenheit. Wet-bulb temperature shall be calculated using dry-bulb temperature and humidity and shall be accurate to +/- 2 degrees Fahrenheit. Enthalpy shall be calculated using dry-bulb temperature and humidity and shall be accurate to +/- 3 BTU/lb over the range of 20 to 36 BTU/lb. Humidity sensors at a minimum shall be accurate within +/- 3 percent full range between 20 and 95 percent, with drift less than 1 percent full scale per year. Pressure transmitters at a minimum shall be accurate to +/- 1 percent full scale with drift less than 1 percent full scale per year.

Provide occupied/unoccupied combination thermostat with temperature sensor for VAV diffusers as indicated on the drawings. Thermostat shall be Price LCD thermostat (PIC-TS-LCD).

Provide wall mounted temperature sensor as indicated on the drawings with a stainless steel plate. Space temperature sensor shall have a 10KΩ resistance rating at 77 degrees Fahrenheit (Type II).

Provide wall mounted humidity sensor as indicated on the drawings. Humidity sensor shall provide a 4-20mA selectable output signal and a 0-100% RH measurement range.

Provide outdoor sensor assembly with temperature sensor, humidity sensor and light sensor as indicated on the drawings. Humidity sensor shall provide a 4-20mA selectable output signal and a 0-100% RH measurement range. Temperature sensor shall have 4-20mA selectable output signal and a 0-100% RH measurement range.

Provide wall mounted Carbon Dioxide (CO_2) sensor where indicated on the drawings. Carbon Dioxide sensors shall measure total percentage of CO_2 in PPM. Sensor shall have an accuracy of ± 75 PPM at a 600 and 1000 ppm concentration and certified by the manufacturer to require calibration no more frequently than once every 5 years. Sensors shall provide a 0-5 VDC, 0-10 VDC or 4-20mA selectable output signal with a measurement range of 0 to 2,000 PPM and a 24 VAC or 24 VDC power input.

Smoke detectors furnished and installed as indicated in this section or as scheduled on the plans (or heat detectors, if permitted by code) shall shut down each associated unit supply fan upon activation where required by code. Provide remote visual and audible alarm device in an approved location if smoke detectors are not connected to a fire alarm panel and label device as "Air Duct Detector Trouble".

Provide relays with contact rating, configuration, and coil voltage that is suitable for the application. Relay shall be general purpose, enclosed plug-in type and protected by a heat and shock resistant duct cover. Number of contacts and operational function shall be as required. Transient suppression shall be provided as an integral part of the relay. Contactors shall be single coil, electrically operated, mechanically held, double-break, silver-to-silver type protected by arcing contacts. Positive locking shall be obtained without the use of hooks, latches, or semi-permanent magnets. Operating and release times shall be 100 milliseconds or less.

6. ALTERNATES

A. DESCRIPTION

Refer to the architectural portion of the specification for list of alternates. Applicable sections of the base specifications shall apply to all work required by the alternate unless otherwise specified. Determine whether or not and how each alternate affects work. Include labor, materials, equipment, and transportation services necessary for and incidental to the completion of work under each particular alternate. Furnish separate bid for each alternate applicable to work, stating the amount to be added or deducted from the base bid.

END OF SECTION 23

BRADLEY E. CHAMBON

Architect:

brr

ARCHITECT OF RECORD:
BRR ARCHITECTURE, INC
8131 METCALF AVE
SUITE 300
OVERLAND PARK, KS 66204

www.brrarch.com

TEL: 913-262-9095
FAX: 913-262-9044

COPYRIGHT NOTICE

This drawing was prepared for use on a specific site contemporaneously with its issue date and it is not suitable for use on a different project site or at a later time. Use of this drawing for reference or example on another project requires the services of properly licensed architects and engineers. Reproduction of this drawing for reuse on another project is not authorized and may be contrary to the law.

Engineer:

HENDERSON ENGINEERS
8345 LENEXA DRIVE, SUITE 300
LENEXA, KS 66214
TEL 913.742.5000 FAX 913.742.5001
WWW.HENDERSONENGINEERS.COM

2050003713
FL. CORPORATE NO: EB 7606
EXPIRES 2/28/2021

Project Owner:

NIKE, Inc.
One Bowerman Drive
Beaverton, OR 97005
(503) 671-6453
www.nike.com

Project Address:

NIKE FACTORY STORE
WATERFORD LAKES SHOPPING CENTER
449 N. ALAFAYA TRAIL
ORLANDO, FL 32828
TEMPLATE ISSUE DATE: 11/28/2018

Fixture Package:

UNITE

Stamp:

THIS DOCUMENT IS RELEASED FOR THE PURPOSE OF PRELIMINARY SUBMITTAL
BRADLEY E. CHAMBON
LICENSE # 82784

IT IS NOT TO BE USED FOR CONSTRUCTION PURPOSES

BRADLEY E. CHAMBON
LICENSE # 82784

Issued For:

PERMIT/BID

Issue Date:

11/06/2020

Revisions:

NO.	REASON	DATE

PROJECT MANAGER:
KH

CHECKED BY:

DRAWN BY:
Author

Project Number:

62301411

Sheet Title:

MECHANICAL SPECIFICATIONS

Sheet Number:

M4.0

COMcheck Software Version 4.1.4.3
Mechanical Compliance Certificate

Project Information

Energy Code:	2017 Florida Building Code, Energy Conservation
Project Title:	Nike Factory - Waterford Lakes, FL
Location:	Orlando, Florida
Climate Zone:	2a
Project Type:	Alteration

Construction Site:
413 N Alafaya Trail
Orlando, FL 32828

Owner/Agent:
BRR Architecture
8131 Metcalf Avenue
Overland Park, KS 66204
(913) 262-9095
brrarch.com

Designer/Contractor:
Henderson Engineers, Inc
8345 Lenexa Drive
Lenexa, KS 66214
(913) 742-5000
hendersonengineers.com

Mechanical Systems List

Quantity	System Type & Description
1	RTU-1 (Single Zone): Heating: 1 each - Duct Furnace, Gas, Capacity = 72 kBtu/h Proposed Efficiency = 82.00% Ec, Required Efficiency: 80.00 % Ec Cooling: 1 each - Single Package DX Unit, Capacity = 28 kBtu/h, Air-Cooled Condenser, Air Economizer Proposed Efficiency = 16.00 SEER, Required Efficiency: 14.00 SEER Fan System: RTU 1 -- Compliance (Motor nameplate HP method) : Passes Fans: RTU1 Supply, Constant Volume, 1000 CFM, 0.4 motor nameplate hp, 0.0 fan efficiency grade
1	RTU-2 (Single Zone): Heating: 1 each - Duct Furnace, Gas, Capacity = 72 kBtu/h Proposed Efficiency = 82.00% Ec, Required Efficiency: 80.00 % Ec Cooling: 1 each - Single Package DX Unit, Capacity = 46 kBtu/h, Air-Cooled Condenser, Air Economizer Proposed Efficiency = 16.00 SEER, Required Efficiency: 14.00 SEER Fan System: RTU 2 -- Compliance (Motor nameplate HP method) : Passes Fans: RTU2 Supply, Constant Volume, 1500 CFM, 0.8 motor nameplate hp, 0.0 fan efficiency grade
1	RTU-3 (Single Zone): Heating: 1 each - Duct Furnace, Gas, Capacity = 120 kBtu/h Proposed Efficiency = 80.00% Ec, Required Efficiency: 80.00 % Ec Cooling: 1 each - Single Package DX Unit, Capacity = 149 kBtu/h, Air-Cooled Condenser, Air Economizer Proposed Efficiency = 12.40 EER, Required Efficiency: 10.80 EER + 12.2 IEER Fan System: RTU 3 -- Compliance (Motor nameplate HP method) : Passes Fans: RTU3 Supply, Constant Volume, 4075 CFM, 1.9 motor nameplate hp, 0.0 fan efficiency grade
1	RTU-4 (Single Zone): Heating: 1 each - Duct Furnace, Gas, Capacity = 148 kBtu/h Proposed Efficiency = 82.00% Ec, Required Efficiency: 80.00 % Ec Cooling: 1 each - Single Package DX Unit, Capacity = 120 kBtu/h, Air-Cooled Condenser, Air Economizer Proposed Efficiency = 13.00 EER, Required Efficiency: 11.00 EER + 12.6 IEER Fan System: RTU 4 -- Compliance (Motor nameplate HP method) : Passes Fans: RTU4 Supply, Constant Volume, 3500 CFM, 2.5 motor nameplate hp, 0.0 fan efficiency grade

Quantity	System Type & Description
1	RTU-5 (Single Zone): Heating: 1 each - Duct Furnace, Gas, Capacity = 148 kBtu/h Proposed Efficiency = 82.00% Ec, Required Efficiency: 80.00 % Ec Cooling: 1 each - Single Package DX Unit, Capacity = 105 kBtu/h, Air-Cooled Condenser, Air Economizer Proposed Efficiency = 14.30 EER, Required Efficiency: 11.00 EER + 12.6 IEER Fan System: RTU 5 -- Compliance (Motor nameplate HP method) : Passes Fans: RTU5 Supply, Constant Volume, 4800 CFM, 4.5 motor nameplate hp, 0.0 fan efficiency grade
1	WH-1: Electric Storage Water Heater, Capacity: 20 gallons w/ Circulation Pump No minimum efficiency requirement applies

Mechanical Compliance Statement

Compliance Statement: The proposed mechanical alteration project represented in this document is consistent with the building plans, specifications, and other calculations submitted with this permit application. The proposed mechanical systems have been designed to meet the 2017 Florida Building Code, Energy Conservation requirements in COM*check* Version 4.1.4.3 and to comply with any applicable mandatory requirements listed in the Inspection Checklist.

Gage Oberheu - Mechanical Designer		10/27/2020
Name - Title	Signature	Date

COMcheck Software Version 4.1.4.3
Inspection Checklist

Energy Code: 2017 Florida Building Code, Energy Conservation

Requirements: 100.0% were addressed directly in the COM*check* software

Text in the "Comments/Assumptions" column is provided by the user in the COMcheck Requirements screen. For each requirement, the user certifies that a code requirement will be met and how that is documented, or that an exception is being claimed. Where compliance is itemized in a separate table, a reference to that table is provided.

Section # & Req.ID	Plan Review	Complies?	Comments/Assumptions
C103.2 [PR2][1]	Plans, specifications, and/or calculations provide all information with which compliance can be determined for the mechanical systems and equipment and document where exceptions to the standard are claimed. Load calculations per acceptable engineering standards and handbooks.	☐Complies ☐Does Not ☐Not Observable ☐Not Applicable	Requirement will be met.
C103.2 [PR3][1]	Plans, specifications, and/or calculations provide all information with which compliance can be determined for the service water heating systems and equipment and document where exceptions to the standard are claimed. Hot water system sized per manufacturer's sizing guide.	☐Complies ☐Does Not ☐Not Observable ☐Not Applicable	Requirement will be met.
C405.6 [PR17][1]	Plans, specifications, and/or calculations provide all information with which compliance can be determined for the electrical systems and equipment and document where exceptions are claimed. Provisions are made for metering individual tenant units. Feeder connectors (for feeder and branch circuits) sized in accordance with approved plans with maximum drop of 5% voltage drop total.	☐Complies ☐Does Not ☐Not Observable ☐Not Applicable	Requirement will be met.

Additional Comments/Assumptions:

1	High Impact (Tier 1)	2	Medium Impact (Tier 2)	3	Low Impact (Tier 3)

Section # & Req.ID	Footing / Foundation Inspection	Complies?	Comments/Assumptions
C403.2.4.5, C403.2.4.6 [FO3][1]	Snow/ice melting system sensors for future connection to controls. Freeze protection systems have automatic controls installed.	☐Complies ☐Does Not ☐Not Observable ☐Not Applicable	**Exception:** Requirement does not apply.

Additional Comments/Assumptions:

1	High Impact (Tier 1)	2	Medium Impact (Tier 2)	3	Low Impact (Tier 3)

Section # & Req.ID	Plumbing Rough-In Inspection	Complies?	Comments/Assumptions
C404.5, C404.5.1, C404.5.2 [PL6][1]	Heated water supply piping conforms to pipe length and volume requirements. Refer to section details.	☐Complies ☐Does Not ☐Not Observable ☐Not Applicable	**Exception:** Requirement does not apply.
C404.5, C404.5.1, C404.5.2 [PL6][1]	Heated water supply piping conforms to pipe length and volume requirements. Refer to section details.	☐Complies ☐Does Not ☐Not Observable ☐Not Applicable	**Exception:** Requirement does not apply.
C404.5, C404.5.1, C404.5.2 [PL6][1]	Heated water supply piping conforms to pipe length and volume requirements. Refer to section details.	☐Complies ☐Does Not ☐Not Observable ☐Not Applicable	**Exception:** Requirement does not apply.
C404.5, C404.5.1, C404.5.2 [PL6][1]	Heated water supply piping conforms to pipe length and volume requirements. Refer to section details.	☐Complies ☐Does Not ☐Not Observable ☐Not Applicable	**Exception:** Requirement does not apply.
C404.5, C404.5.1, C404.5.2 [PL6][1]	Heated water supply piping conforms to pipe length and volume requirements. Refer to section details.	☐Complies ☐Does Not ☐Not Observable ☐Not Applicable	Requirement will be met.
C404.6.1, C404.6.2 [PL3][1]	Automatic time switches installed to automatically switch off the recirculating hot-water system or heat trace.	☐Complies ☐Does Not ☐Not Observable ☐Not Applicable	Requirement will be met.
C404.6.3 [PL7][1]	Pumps that circulate water between a heater and storage tank have controls that limit operation from startup to <= 5 minutes after end of heating cycle.	☐Complies ☐Does Not ☐Not Observable ☐Not Applicable	**Exception:** Requirement does not apply.
C404.6.3 [PL7][1]	Pumps that circulate water between a heater and storage tank have controls that limit operation from startup to <= 5 minutes after end of heating cycle.	☐Complies ☐Does Not ☐Not Observable ☐Not Applicable	**Exception:** Requirement does not apply.
C404.6.3 [PL7][1]	Pumps that circulate water between a heater and storage tank have controls that limit operation from startup to <= 5 minutes after end of heating cycle.	☐Complies ☐Does Not ☐Not Observable ☐Not Applicable	**Exception:** Requirement does not apply.
C404.6.3 [PL7][1]	Pumps that circulate water between a heater and storage tank have controls that limit operation from startup to <= 5 minutes after end of heating cycle.	☐Complies ☐Does Not ☐Not Observable ☐Not Applicable	**Exception:** Requirement does not apply.
C404.6.3 [PL7][1]	Pumps that circulate water between a heater and storage tank have controls that limit operation from startup to <= 5 minutes after end of heating cycle.	☐Complies ☐Does Not ☐Not Observable ☐Not Applicable	**Exception:** Requirement does not apply.

1	High Impact (Tier 1)	2	Medium Impact (Tier 2)	3	Low Impact (Tier 3)

Section # & Req.ID	Plumbing Rough-In Inspection	Complies?	Comments/Assumptions
C404.6.3 [PL7][1]	Pumps that circulate water between a heater and storage tank have controls that limit operation from startup to <= 5 minutes after end of heating cycle.	☐Complies ☐Does Not ☐Not Observable ☐Not Applicable	**Exception:** Requirement does not apply.
C404.7 [PL8][1]	Water distribution system that pumps water from a heated-water supply pipe back to the heated-water source through a cold-water supply pipe is a demand recirculation water system. Pumps within this system have controls that start the pump upon receiving a signal from the action of a user of a fixture or appliance and limits the temperature of the water entering the cold-water piping to 104°F.	☐Complies ☐Does Not ☐Not Observable ☐Not Applicable	**Exception:** Requirement does not apply.
C404.7 [PL8][1]	Water distribution system that pumps water from a heated-water supply pipe back to the heated-water source through a cold-water supply pipe is a demand recirculation water system. Pumps within this system have controls that start the pump upon receiving a signal from the action of a user of a fixture or appliance and limits the temperature of the water entering the cold-water piping to 104°F.	☐Complies ☐Does Not ☐Not Observable ☐Not Applicable	**Exception:** Requirement does not apply.
C404.7 [PL8][1]	Water distribution system that pumps water from a heated-water supply pipe back to the heated-water source through a cold-water supply pipe is a demand recirculation water system. Pumps within this system have controls that start the pump upon receiving a signal from the action of a user of a fixture or appliance and limits the temperature of the water entering the cold-water piping to 104°F.	☐Complies ☐Does Not ☐Not Observable ☐Not Applicable	**Exception:** Requirement does not apply.
C404.7 [PL8][1]	Water distribution system that pumps water from a heated-water supply pipe back to the heated-water source through a cold-water supply pipe is a demand recirculation water system. Pumps within this system have controls that start the pump upon receiving a signal from the action of a user of a fixture or appliance and limits the temperature of the water entering the cold-water piping to 104°F.	☐Complies ☐Does Not ☐Not Observable ☐Not Applicable	**Exception:** Requirement does not apply.
C404.7 [PL8][1]	Water distribution system that pumps water from a heated-water supply pipe back to the heated-water source through a cold-water supply pipe is a demand recirculation water system. Pumps within this system have controls that start the pump upon receiving a signal from the action of a user of a fixture or appliance and limits the temperature of the water entering the cold-water piping to 104°F.	☐Complies ☐Does Not ☐Not Observable ☐Not Applicable	**Exception:** Requirement does not apply.

1	High Impact (Tier 1)	2	Medium Impact (Tier 2)	3	Low Impact (Tier 3)

Section # & Req.ID	Plumbing Rough-In Inspection	Complies?	Comments/Assumptions
C404.7 [PL8][1]	Water distribution system that pumps water from a heated-water supply pipe back to the heated-water source through a cold-water supply pipe is a demand recirculation water system. Pumps within this system have controls that start the pump upon receiving a signal from the action of a user of a fixture or appliance and limits the temperature of the water entering the cold-water piping to 104°F.	☐Complies ☐Does Not ☐Not Observable ☐Not Applicable	Requirement will be met.

Additional Comments/Assumptions:

1	High Impact (Tier 1)	2	Medium Impact (Tier 2)	3	Low Impact (Tier 3)

Section # & Req.ID	Mechanical Rough-In Inspection	Complies?	Comments/Assumptions
C402.2.6 [ME41][2]	Thermally ineffective panel surfaces of sensible heating panels have insulation >= R-3.5.	☐Complies ☐Does Not ☐Not Observable ☐Not Applicable	**Exception:** Requirement does not apply.
C403.2.9.1.1 [ME60][2]	HVAC ducts and plenums insulated and sealed according to Florida Section C403.2.9, Table C403.2.9.1.	☐Complies ☐Does Not ☐Not Observable ☐Not Applicable	Requirement will be met.
C403.2.9.2 [ME79][2]	All ducts, air handlers, filter boxes, building cavities, mechanical closets and enclosed support platforms that form the primary air containment passageways for air distribution systems are constructed and erected in accordance with Table C403.2.9.2 and with Chapter 6 of the Florida Building Code, Mechanical. Ducts are be constructed, braced, reinforced and installed to provide structural strength and durability. All transverse joints, longitudinal seams and fitting connections are securely fastened in accordance with the applicable standards of this section.	☐Complies ☐Does Not ☐Not Observable ☐Not Applicable	Requirement will be met.
C403.2.9.1.2 [ME80][2]	Duct insulation is protected from damage but not limited to the following: 1. Insulation exposed to weather is suitable for outdoor service. Cellular foam insulation is protected or painted with a coating that is water retardant and provides shielding from solar radiation. 2. Insulation covering cooling ducts located outside the conditioned space is vapor retardant located outside the insulation, all penetrations and joints of which shall be sealed.	☐Complies ☐Does Not ☐Not Observable ☐Not Applicable	Requirement will be met.
C403.2.9.1.3 [ME81][2]	Additional insulation with vapor barrier is provided where the minimum duct insulation requirements of Section C403.2.9.1.1 are determined to be insufficient to prevent condensation.	☐Complies ☐Does Not ☐Not Observable ☐Not Applicable	Requirement will be met.
C403.2.13 [ME71][2]	Unenclosed spaces that are heated use only radiant heat.	☐Complies ☐Does Not ☐Not Observable ☐Not Applicable	**Exception:** Requirement does not apply.
C403.2.3 [ME55][2]	HVAC equipment efficiency verified.	☐Complies ☐Does Not ☐Not Observable ☐Not Applicable	*See the Mechanical Systems list for values.*
C403.2.9.3 [ME10][2]	Ducts, air handlers, filter boxes, building cavities, mechanical closets and enclosed support platforms that form the primary air containment passageways for air distribution systems are sealed in accordance with the applicable criteria of this section and Table C403.2.9.2.	☐Complies ☐Does Not ☐Not Observable ☐Not Applicable	Requirement will be met.

1	High Impact (Tier 1)	2	Medium Impact (Tier 2)	3	Low Impact (Tier 3)

Architect:

brr

ARCHITECT OF RECORD:
BRR ARCHITECTURE, INC
8131 METCALF AVE
SUITE 300
OVERLAND PARK, KS 66204

www.brrarch.com

TEL: 913-262-9095
FAX: 913-262-9044

COPYRIGHT NOTICE
This drawing was prepared for use on a specific site contemporaneously with its issue date and it is not suitable for use on a different project site or at a later time. Use of this drawing on another project or on another project requires the services of properly licensed architects and engineers. Reproduction of this drawing for reuse on another project is not authorized and may be contrary to the law.

Engineer:

HENDERSON ENGINEERS
8345 LENEXA DRIVE, SUITE 300
LENEXA, KS 66214
TEL 913.742.5000 FAX 913.742.5001
WWW.HENDERSONENGINEERS.COM
2050003713
FL CORPORATE NO: EB 7606
EXPIRES 2/28/2021

Project Owner:

NIKE, Inc.
One Bowerman Drive
Beaverton, OR 97005
(503) 671-6453
www.nike.com

Project Address:

NIKE FACTORY STORE
WATERFORD LAKES SHOPPING CENTER
449 N. ALAFAYA TRAIL
ORLANDO, FL 32828
TEMPLATE ISSUE DATE: 11/26/2018

Fixture Package:

UNITE

Stamp:

THIS DOCUMENT IS RELEASED FOR THE PURPOSE OF PRELIMINARY SUBMITTAL
BRADLEY E. CHAMBON
LICENSE # 82784

IT IS NOT TO BE USED FOR CONSTRUCTION PURPOSES

BRADLEY E. CHAMBON
LICENSE # 82784

Issued For:

PERMIT/BID

Issue Date:

11/06/2020

Revisions:

NO.	REASON	DATE

PROJECT MANAGER:
KH
CHECKED BY:
DRAWN BY:
Author

Project Number:

62301411

Sheet Title:

MECHANICAL ENERGY COMPLIANCE

Sheet Number:

M5.0

BRADLEY E. CHAMBON

Section # & Req.ID	Mechanical Rough-In Inspection	Complies?	Comments/Assumptions
C403.2.9.4 [ME78][1]	Cavities in framed spaces are not used to deliver air from or return air to the conditioning system unless they contain an air duct insert which is insulated in accordance with Section C403.2.9.1 and constructed and sealed in accordance with the requirements of Section C403.2.9.2 appropriate for the duct materials used.	☐Complies ☐Does Not ☐Not Observable ☐Not Applicable	**Exception:** Return air plenums beneath a roof deck that is insulated to at least R-19.
C403.2.9.5 [ME76][1]	Air distribution systems are sized and designed in accordance with recognized engineering standards. Refer to section details.	☐Complies ☐Does Not ☐Not Observable ☐Not Applicable	Requirement will be met.
C403.2.9.6 [ME77][1]	Air-handling units not installed in attics of commercial buildings.	☐Complies ☐Does Not ☐Not Observable ☐Not Applicable	Requirement will be met.
C403.2.4.7 [ME113][1]	Fault detection and diagnostics installed with air-cooled unitary DX units having economizers.	☐Complies ☐Does Not ☐Not Observable ☐Not Applicable	Requirement will be met.
C403.2.4.7 [ME113][1]	Fault detection and diagnostics installed with air-cooled unitary DX units having economizers.	☐Complies ☐Does Not ☐Not Observable ☐Not Applicable	Requirement will be met.
C403.2.4.7 [ME113][1]	Fault detection and diagnostics installed with air-cooled unitary DX units having economizers.	☐Complies ☐Does Not ☐Not Observable ☐Not Applicable	Requirement will be met.
C408.2.2.1 [ME53][1]	Air system balancing accomplished in a manner to first minimize throttling losses, then for fans with fan system power greater than 1 hp, fan speeds shall be adjusted to meet design flow conditions. Balancing procedures shall be in accordance with NEBB Procedural Standards, the AABC, National Standards, or equivalent procedures.	☐Complies ☐Does Not ☐Not Observable ☐Not Applicable	Requirement will be met.
C403.2.6.1 [ME59][1]	Demand control ventilation provided for spaces >500 ft2 and >25 people/1000 ft2 occupant density and served by systems with air side economizer, auto modulating outside air damper control, or design airflow >3,000 cfm.	☐Complies ☐Does Not ☐Not Observable ☐Not Applicable	Requirement will be met.
C403.2.6.2 [ME115][1]	Enclosed parking garage ventilation has automatic contaminant detection and capacity to stage or modulate fans to 50% or less of design capacity.	☐Complies ☐Does Not ☐Not Observable ☐Not Applicable	**Exception:** Requirement does not apply.
C403.2.7 [ME57][1]	Exhaust air energy recovery on systems meeting Table C403.2.7(1) and C403.2.7(2).	☐Complies ☐Does Not ☐Not Observable ☐Not Applicable	**Exception:** Where the largest exhaust source is less than 75% of the design outdoor airflow.

1	High Impact (Tier 1)	2	Medium Impact (Tier 2)	3	Low Impact (Tier 3)

Section # & Req.ID	Mechanical Rough-In Inspection	Complies?	Comments/Assumptions
C403.2.8 [ME116][1]	Kitchen exhaust systems comply with replacement air and conditioned supply air limitations, and satisfy hood rating requirements and maximum exhaust rate criteria.	☐Complies ☐Does Not ☐Not Observable ☐Not Applicable	**Exception:** Requirement does not apply.
C403.3 [ME62][1]	Air economizers provided where required, meet the requirements for design capacity, control signal, ventilation controls, high-limit shut-off, integrated economizer control, and provide a means to relieve excess outside air during operation.	☐Complies ☐Does Not ☐Not Observable ☐Not Applicable	Requirement will be met.
C403.3 [ME62][1]	Air economizers provided where required, meet the requirements for design capacity, control signal, ventilation controls, high-limit shut-off, integrated economizer control, and provide a means to relieve excess outside air during operation.	☐Complies ☐Does Not ☐Not Observable ☐Not Applicable	Requirement will be met.
C403.3 [ME62][1]	Air economizers provided where required, meet the requirements for design capacity, control signal, ventilation controls, high-limit shut-off, integrated economizer control, and provide a means to relieve excess outside air during operation.	☐Complies ☐Does Not ☐Not Observable ☐Not Applicable	Requirement will be met.
C403.4.4.6 [ME110][1]	Multiple zone VAV systems with DDC of individual zone boxes have static pressure setpoint reset controls.	☐Complies ☐Does Not ☐Not Observable ☐Not Applicable	**Exception:** Requirement does not apply. *See the Mechanical Systems list for values.*
C403.4.4.6 [ME110][1]	Multiple zone VAV systems with DDC of individual zone boxes have static pressure setpoint reset controls.	☐Complies ☐Does Not ☐Not Observable ☐Not Applicable	**Exception:** Requirement does not apply. *See the Mechanical Systems list for values.*
C403.4.4.6 [ME110][1]	Multiple zone VAV systems with DDC of individual zone boxes have static pressure setpoint reset controls.	☐Complies ☐Does Not ☐Not Observable ☐Not Applicable	**Exception:** Requirement does not apply. *See the Mechanical Systems list for values.*
C403.4.4.6 [ME110][1]	Multiple zone VAV systems with DDC of individual zone boxes have static pressure setpoint reset controls.	☐Complies ☐Does Not ☐Not Observable ☐Not Applicable	**Exception:** Requirement does not apply. *See the Mechanical Systems list for values.*
C403.4.4.6 [ME110][1]	Multiple zone VAV systems with DDC of individual zone boxes have static pressure setpoint reset controls.	☐Complies ☐Does Not ☐Not Observable ☐Not Applicable	**Exception:** Requirement does not apply. *See the Mechanical Systems list for values.*
C408.2.2.1 [ME53][1]	Air outlets and zone terminal devices have means for air balancing.	☐Complies ☐Does Not ☐Not Observable ☐Not Applicable	Requirement will be met.
C403.5, C403.5.1, C403.5.2 [ME123][1]	Refrigerated display cases, walk-in coolers or walk-in freezers served by remote compressors and remote condensers not located in a condensing unit, have fan-powered condensers that comply with Sections C403.5.1 and refrigeration compressor systems that comply with C403.5.2...	☐Complies ☐Does Not ☐Not Observable ☐Not Applicable	**Exception:** Requirement does not apply.

1	High Impact (Tier 1)	2	Medium Impact (Tier 2)	3	Low Impact (Tier 3)

Section # & Req.ID	Mechanical Rough-In Inspection	Complies?	Comments/Assumptions
C403.5.3 [ME124][1]	Condensing coils installed in cool air stream of another air-conditioning unit. The condensing coil of one air-conditioning unit shall not be installed in the cool air stream of another air-conditioning unit.	☐Complies ☐Does Not ☐Not Observable ☐Not Applicable	**Exception:** Requirement does not apply.

Additional Comments/Assumptions:

1	High Impact (Tier 1)	2	Medium Impact (Tier 2)	3	Low Impact (Tier 3)

Section # & Req.ID	Final Inspection	Complies?	Comments/Assumptions
C303.3, C408.2.5.3 [FI8][1]	Furnished O&M manuals for HVAC systems within 90 days of system acceptance.	☐Complies ☐Does Not ☐Not Observable ☐Not Applicable	Requirement will be met.
C403.2.4.2.4 [FI56][1]	Minimum one humidity control device per installed humidification/dehumidification system. Controls prevent simultaneous operation of humidification and dehumidification equipment.	☐Complies ☐Does Not ☐Not Observable ☐Not Applicable	Requirement will be met.
C403.2.4.2.4 [FI56][1]	Minimum one humidity control device per installed humidification/dehumidification system. Controls prevent simultaneous operation of humidification and dehumidification equipment.	☐Complies ☐Does Not ☐Not Observable ☐Not Applicable	Requirement will be met.
C403.2.4.2.4 [FI56][1]	Minimum one humidity control device per installed humidification/dehumidification system. Controls prevent simultaneous operation of humidification and dehumidification equipment.	☐Complies ☐Does Not ☐Not Observable ☐Not Applicable	Requirement will be met.
C403.2.4.2.4 [FI56][1]	Minimum one humidity control device per installed humidification/dehumidification system. Controls prevent simultaneous operation of humidification and dehumidification equipment.	☐Complies ☐Does Not ☐Not Observable ☐Not Applicable	Requirement will be met.
C403.2.4.2.4 [FI56][1]	Minimum one humidity control device per installed humidification/dehumidification system. Controls prevent simultaneous operation of humidification and dehumidification equipment.	☐Complies ☐Does Not ☐Not Observable ☐Not Applicable	Requirement will be met.
C403.2.1 [FI50][1]	HVAC systems and equipment design loads calculated in accordance with ANSI/ASHRAE/ACCA Standard 183 or ACCA Manual N or by an approved equivalent computational procedure. Design loads shall be attached to the code compliance form submitted to the building department when the building is permitted or, in the event the mechanical permit is obtained at a later time, the sizing calculation shall be submitted with the application for the mechanical permit.	☐Complies ☐Does Not ☐Not Observable ☐Not Applicable	Requirement will be met.
C403.2.2 [FI27][1]	HVAC systems and equipment capacity does not exceed calculated loads.	☐Complies ☐Does Not ☐Not Observable ☐Not Applicable	Requirement will be met.
C403.2.4.1 [FI47][1]	Heating and cooling to each zone is controlled by a thermostat control. Minimum one humidity control device per installed humidification/dehumidification system.	☐Complies ☐Does Not ☐Not Observable ☐Not Applicable	Requirement will be met.

1	High Impact (Tier 1)	2	Medium Impact (Tier 2)	3	Low Impact (Tier 3)

Section # & Req.ID	Final Inspection	Complies?	Comments/Assumptions
C403.2.4.1 [FI47][1]	Heating and cooling to each zone is controlled by a thermostat control. Minimum one humidity control device per installed humidification/dehumidification system.	☐Complies ☐Does Not ☐Not Observable ☐Not Applicable	Requirement will be met.
C403.2.4.1 [FI47][1]	Heating and cooling to each zone is controlled by a thermostat control. Minimum one humidity control device per installed humidification/dehumidification system.	☐Complies ☐Does Not ☐Not Observable ☐Not Applicable	Requirement will be met.
C403.2.4.1 [FI47][1]	Heating and cooling to each zone is controlled by a thermostat control. Minimum one humidity control device per installed humidification/dehumidification system.	☐Complies ☐Does Not ☐Not Observable ☐Not Applicable	Requirement will be met.
C403.2.4.1 [FI47][1]	Heating and cooling to each zone is controlled by a thermostat control. Minimum one humidity control device per installed humidification/dehumidification system.	☐Complies ☐Does Not ☐Not Observable ☐Not Applicable	Requirement will be met.
C403.2.4.1.2 [FI38][1]	Thermostatic controls have a 5 °F deadband.	☐Complies ☐Does Not ☐Not Observable ☐Not Applicable	Requirement will be met.
C403.2.4.1.3 [FI20][1]	Temperature controls have setpoint overlap restrictions.	☐Complies ☐Does Not ☐Not Observable ☐Not Applicable	Requirement will be met.
C403.2.4.2 [FI39][1]	Each zone equipped with setback controls using automatic time clock or programmable control system.	☐Complies ☐Does Not ☐Not Observable ☐Not Applicable	Requirement will be met.
C404.12.2 [FI53][1]	Public lavatory facilities equipped with outlet devices which limit the flow of hot water to a maximum of 0.5 gpm or are equipped with self-closing valves that limit delivery to a per cycle maximum of 0.25 gallons of hot water for recirculating systems and to a maximum of 0.50 gallons for non-recirculating systems.	☐Complies ☐Does Not ☐Not Observable ☐Not Applicable	Requirement will be met.
C404.12.2 [FI57][1]	Public lavatory water temperature <=110°F.	☐Complies ☐Does Not ☐Not Observable ☐Not Applicable	Requirement will be met.
C404.12.1 [FI52][1]	Showers used for non-safety reasons equipped with flow control devices to limit the water discharge to a maximum of 2.5 gpm per shower head. Flow restricting inserts used as a component part of a showerhead are mechanically retained at the point of manufacture	☐Complies ☐Does Not ☐Not Observable ☐Not Applicable	**Exception:** Requirement does not apply.

1	High Impact (Tier 1)	2	Medium Impact (Tier 2)	3	Low Impact (Tier 3)

Section # & Req.ID	Final Inspection	Complies?	Comments/Assumptions
C408.2.2 [FI54][1]	Construction documents require that a written balance report be provided to the building owner or rep for HVAC systems serving zones with total condition area > 5,000 sqft. Air distribution systems shall be tested, adjusted, and balanced by a licensed engineer or certified company.	☐Complies ☐Does Not ☐Not Observable ☐Not Applicable	Requirement will be met.
C403.2.4.2.1, C403.2.4.2.2 [FI40][1]	Automatic Controls: Setback to 55°F (heat) and 85°F (cool); 7-day clock, 2-hour occupant override, 10-hour backup	☐Complies ☐Does Not ☐Not Observable ☐Not Applicable	Requirement will be met.
C403.2.4.2.3 [FI41][1]	Systems include optimum start controls.	☐Complies ☐Does Not ☐Not Observable ☐Not Applicable	Requirement will be met.
C403.2.4.2.3 [FI41][1]	Systems include optimum start controls.	☐Complies ☐Does Not ☐Not Observable ☐Not Applicable	Requirement will be met.
C403.2.4.2.3 [FI41][1]	Systems include optimum start controls.	☐Complies ☐Does Not ☐Not Observable ☐Not Applicable	Requirement will be met.
C403.2.4.2.3 [FI41][1]	Systems include optimum start controls.	☐Complies ☐Does Not ☐Not Observable ☐Not Applicable	Requirement will be met.
C403.2.4.2.3 [FI41][1]	Systems include optimum start controls.	☐Complies ☐Does Not ☐Not Observable ☐Not Applicable	Requirement will be met.
C404.3 [FI11][1]	Heat traps installed on supply and discharge piping of non-circulating systems.	☐Complies ☐Does Not ☐Not Observable ☐Not Applicable	**Exception:** Requirement does not apply.
C404.4 [FI25][2]	All piping insulated in accordance with section details and Table C403.2.10.	☐Complies ☐Does Not ☐Not Observable ☐Not Applicable	Requirement will be met.
C404.6.1 [FI12][1]	Controls are installed that limit the operation of a recirculation pump installed to maintain temperature of a storage tank. System return pipe is a dedicated return pipe or a cold water supply pipe.	☐Complies ☐Does Not ☐Not Observable ☐Not Applicable	Requirement will be met.
C408.2.1 [FI28][1]	Commissioning plan developed by registered design professional or approved agency.	☐Complies ☐Does Not ☐Not Observable ☐Not Applicable	Requirement will be met.
C408.2.3.1 [FI31][1]	HVAC equipment has been tested to ensure proper operation.	☐Complies ☐Does Not ☐Not Observable ☐Not Applicable	Requirement will be met.

1	High Impact (Tier 1)	2	Medium Impact (Tier 2)	3	Low Impact (Tier 3)

Section # & Req.ID	Final Inspection	Complies?	Comments/Assumptions
C408.2.3.2 [FI10][1]	HVAC control systems have been tested to ensure proper operation, calibration and adjustment of controls.	☐Complies ☐Does Not ☐Not Observable ☐Not Applicable	Requirement will be met.
C408.2.3.3 [FI32][1]	Economizers have been tested to ensure proper operation.	☐Complies ☐Does Not ☐Not Observable ☐Not Applicable	Requirement will be met.
C408.2.4 [FI29][1]	Preliminary commissioning report completed and certified by registered design professional or approved agency.	☐Complies ☐Does Not ☐Not Observable ☐Not Applicable	Requirement will be met.
C408.2.5.1 [FI7][1]	Furnished HVAC as-built drawings submitted within 90 days of system acceptance.	☐Complies ☐Does Not ☐Not Observable ☐Not Applicable	Requirement will be met.
C408.2.5.3 [FI43][1]	An air and/or hydronic system balancing report is provided for HVAC systems.	☐Complies ☐Does Not ☐Not Observable ☐Not Applicable	Requirement will be met.
C408.2.5.4 [FI30][1]	Final commissioning report due to building owner within 90 days of receipt of certificate of occupancy.	☐Complies ☐Does Not ☐Not Observable ☐Not Applicable	Requirement will be met.

Additional Comments/Assumptions:

1	High Impact (Tier 1)	2	Medium Impact (Tier 2)	3	Low Impact (Tier 3)

Architect:

brr

ARCHITECT OF RECORD:
BRR ARCHITECTURE, INC
8131 METCALF AVE
SUITE 300
OVERLAND PARK, KS 66204

www.brrarch.com

TEL: 913-262-9995
FAX: 913-262-9044

COPYRIGHT NOTICE

This drawing was prepared for use on a specific site contemporaneously with its issue date and it is not suitable for use on a different project site or at a later time. Use of this drawing on another project or on another project requires the services of properly licensed architects and engineers. Reproduction of this drawing for reuse on another project is not authorized and may be contrary to the law.

Engineer:

HENDERSON ENGINEERS
8345 LENEXA DRIVE, SUITE 300
LENEXA, KS 66214
TEL 913.742.5000 FAX 913.742.5001
WWW.HENDERSONENGINEERS.COM
2050003713
FL CORPORATE NO: EB 7606
EXPIRES 2/28/2021

Project Owner:

NIKE, Inc.
One Bowerman Drive
Beaverton, OR 97005
(503) 671-6453
www.nike.com

Project Address:

NIKE FACTORY STORE
WATERFORD LAKES SHOPPING CENTER
449 N. ALAFAYA TRAIL
ORLANDO, FL 32828

TEMPLATE ISSUE DATE: 11/26/2018

Fixture Package:

UNITE

Stamp:

THIS DOCUMENT IS RELEASED FOR THE PURPOSE OF PRELIMINARY SUBMITTAL
BRADLEY E. CHAMBON
LICENSE # 82784

IT IS NOT TO BE USED FOR CONSTRUCTION PURPOSES

BRADLEY E. CHAMBON
LICENSE # 82784

Issued For:

PERMIT/BID

Issue Date:

11/06/2020

Revisions:

NO.	REASON	DATE

PROJECT MANAGER: KH

CHECKED BY:

DRAWN BY: Author

Project Number:

62301411

Sheet Title:

MECHANICAL ENERGY COMPLIANCE

Sheet Number:

M5.1

BRADLEY E. CHAMBON

GENERAL NOTES:

1. DRAWINGS ARE DIAGRAMMATIC ONLY AND REPRESENT THE GENERAL SCOPE OF THE WORK. PRIOR TO SUBMITTING BID, VISIT THE JOB SITE TO OBSERVE THE EXISTING CONDITIONS OF THE PROJECT. REVIEW THE GENERAL NOTES, SPECIFICATIONS AND PLANS FOR ADDITIONAL REQUIREMENTS THAT MAY NOT BE SPECIFICALLY CALLED OUT IN THIS PORTION OF THE CONSTRUCTION DOCUMENTS. NOTIFY ARCHITECT OF ANY CONFLICTS OR DISCREPANCIES PRIOR TO SUBMISSION OF BID.
2. PROVIDE A CONSTRUCTION RECORD SET OF "AS-BUILT" DOCUMENTS TO THE ARCHITECT REFLECTING ANY VARIANCES OF INSTALLED PIPING LOCATIONS OR EQUIPMENT CONTRARY TO THE CONSTRUCTION DOCUMENTS, REFER TO SPECIFICATIONS.
3. PROVIDE TO THE ARCHITECT A COPY OF INSPECTION REPORTS AND APPROVAL CERTIFICATES FROM LOCAL AND STATE INSPECTIONS, REFER TO SPECIFICATIONS.
4. INSTALLATION SHALL COMPLY WITH LEGALLY CONSTITUTED CODES AND THE REQUIREMENTS OF AUTHORITIES HAVING JURISDICTION AND ALSO MEET ALL REQUIREMENTS OF THE LANDLORD. OBTAIN A COPY OF THE LANDLORD'S REQUIREMENTS AND REVIEW PRIOR TO SUBMITTING BID.
5. PLANS AND SPECIFICATIONS GOVERN WHERE THEY EXCEED CODE REQUIREMENTS.
6. VERIFY LOCATION AND DEPTH OF UTILITIES AT POINTS OF CONNECTION BEFORE START OF PIPING INSTALLATION.
7. REFER TO ARCHITECTURAL PLANS FOR EXACT LOCATION AND MOUNTING HEIGHTS OF PLUMBING FIXTURES.
8. DO NOT SCALE FLOOR PLANS FOR EXACT HORIZONTAL LOCATION OF PIPE ROUTING.
9. INSTALL CONCEALED PIPING TIGHT TO THE STRUCTURE AND AS HIGH AS POSSIBLE. INSTALL EXPOSED PIPING TIGHT TO THE STRUCTURE, WALL OR CEILING AND AS HIGH AS POSSIBLE. COORDINATE WITH OTHER TRADES TO AVOID CONFLICTS.
10. VALVES SHALL BE LINE SIZE UNLESS OTHERWISE NOTED.
11. PIPING IN FINISHED AREAS SHALL BE ROUTED CONCEALED; EXPOSED PIPING, WHERE NECESSARY, SHALL BE ROUTED AS HIGH AS POSSIBLE AND TIGHT TO WALLS.
12. COORDINATE ALL WORK WITH OTHER TRADES AND CONTRACTORS.
13. COORDINATE PIPING INSTALLATION WITH STRUCTURAL GRADE BEAMS, FOOTINGS, COLUMN PIERS, ETC. SLEEVE PIPING THROUGH GRADE BEAMS, FOOTING, ETC. WHERE REQUIRED AND AS NOTED ON PLANS. COORDINATE SLEEVE INSTALLATIONS WITH THE ARCHITECT, STRUCTURAL ENGINEER, STRUCTURAL CONTRACTOR AND GENERAL CONTRACTOR BEFORE CONCRETE IS INSTALLED.
14. CLEAN FAUCET AERATORS AND PIPE STRAINERS PRIOR TO TURNING BUILDING OVER TO THE OWNER.
15. PROVIDE TRAP PRIMERS WHERE REQUIRED BY LOCAL AUTHORITIES.
16. COORDINATE PIPE ROUTING AWAY FROM ELECTRICAL PANELS. DO NOT INSTALL PIPING OVER ELECTRICAL PANELS.
17. PAINT ALL EXPOSED WATER PIPING USING RUST INHIBITOR PAINT. PAINT AND COLOR SHALL BE COORDINATED WITH THE ARCHITECT AND / OR OWNER.
18. INSULATE PIPING ROUTED IN EXTERIOR BUILDING WALLS WITH MINIMUM 2" BATT INSULATION TO PREVENT FREEZING.
19. WATER HAMMER ARRESTORS SHALL BE SIZE "A" UNLESS NOTED OTHERWISE.
20. PROVIDE VERTICAL LIFT SPRING LOADED CHECK VALVES IN HOT AND COLD WATER SUPPLIES FOR MOP SINK FAUCETS DOWNSTREAM OF SHUTOFF VALVES.
21. VERIFY EXISTING EQUIPMENT, INCLUDING ACCESSORIES, IS NOT DAMAGED AND IS IN GOOD WORKING ORDER. REPORT ANY DEFICIENCIES TO THE ARCHITECT.
22. PRIOR TO CONSTRUCTION CONTRACTOR SHALL FIELD VERIFY THE SANITARY TIE IN POINTS INVERT ELEVATION. ALL SANITARY PIPING SHALL BE UNIFORM SLOPED AT 1/4" PER FOOT FREE FROM SAGS. NOTIFY ARCHITECT IMMEDIATELY IF INVERT OF TIE IN LOCATION IS INADEQUATE. REFER TO PLUMBING SPECIFICATIONS ON SHEET P4.0 FOR ADDITIONAL INFORMATION.
23. PROVIDE SIZE AND LENGTH OF HOT WATER SUPPLY PIPE FROM CIRCULATED HOT WATER BRANCH OR MAIN TO TERMINATION OF HOT WATER SUPPLY PIPE AT EACH FIXTURE PER 2015 INTERNATIONAL ENERGY CONSERVATION CODE, TABLE C404.3.1. FOR 1/2" HOT WATER SUPPLY PIPE SIZE TO INDIVIDUAL LAVATORIES, PROVIDE MAXIMUM LENGTH OF TWO FEET. FOR 1/2" HOT WATER SUPPLY PIPE SIZE TO INDIVIDUAL SINKS, PROVIDE MAXIMUM LENGTH OF 43 FEET. FOR 3/4" HOT WATER SUPPLY PIPE SIZE TO INDIVIDUAL SINKS, PROVIDE MAXIMUM LENGTH OF 21 FEET.

GENERAL PLAN NOTES:

1. REFER TO PLUMBING RISER DIAGRAMS ON SHEET P2.0 FOR ADDITIONAL PIPE SIZES AND DETAILS NOT SHOWN ON THE PLUMBING PLANS.

PLUMBING PLAN NOTES

1. DO NOT ROUTE WATER, VENT OR CONDENSATE PIPING OVER ELECTRICAL, TELEPHONE PANEL BOARDS OR IT TECHNOLOGY EQUIPMENT. COORDINATE PIPE ROUTINGS AROUND THE REQUIRED CLEARANCE SPACE OF PANELBOARDS.
2. EXISTING GAS METER/REGULATOR ASSEMBLY SET AT 7" W.C. WITH A PRESSURE DROP OF 0.5 PSI. TOTAL DEVELOPED LENGTH = 200' TOTAL CONNECTED LOAD = 560 CFH.
3. EXISTING 2"G UP TO ROOF.
4. EXISTING 4"S.
5. CAP EXISTING 2"G PIPE ON ROOF.
6. MOUNT WATER SHUT OFF SWITCH AT 4'-0" AFF AND TIE INTO EXISTING LANDLORD PROVIDED WATER METER.

EMS CONTROLS:
CONTRACTORS ARE RESPONSIBLE FOR COORDINATING ALL EQUIPMENT CONTROLS WITH EMS VENDOR PRIOR TO PURCHASE AND INSTALLATION. CONTRACTORS SHALL COORDINATE WITH EMS VENDOR TO PROVIDE ALL NECESSARY EQUIPMENT AND ACCESSORIES FOR A FULLY FUNCTIONING SYSTEM.

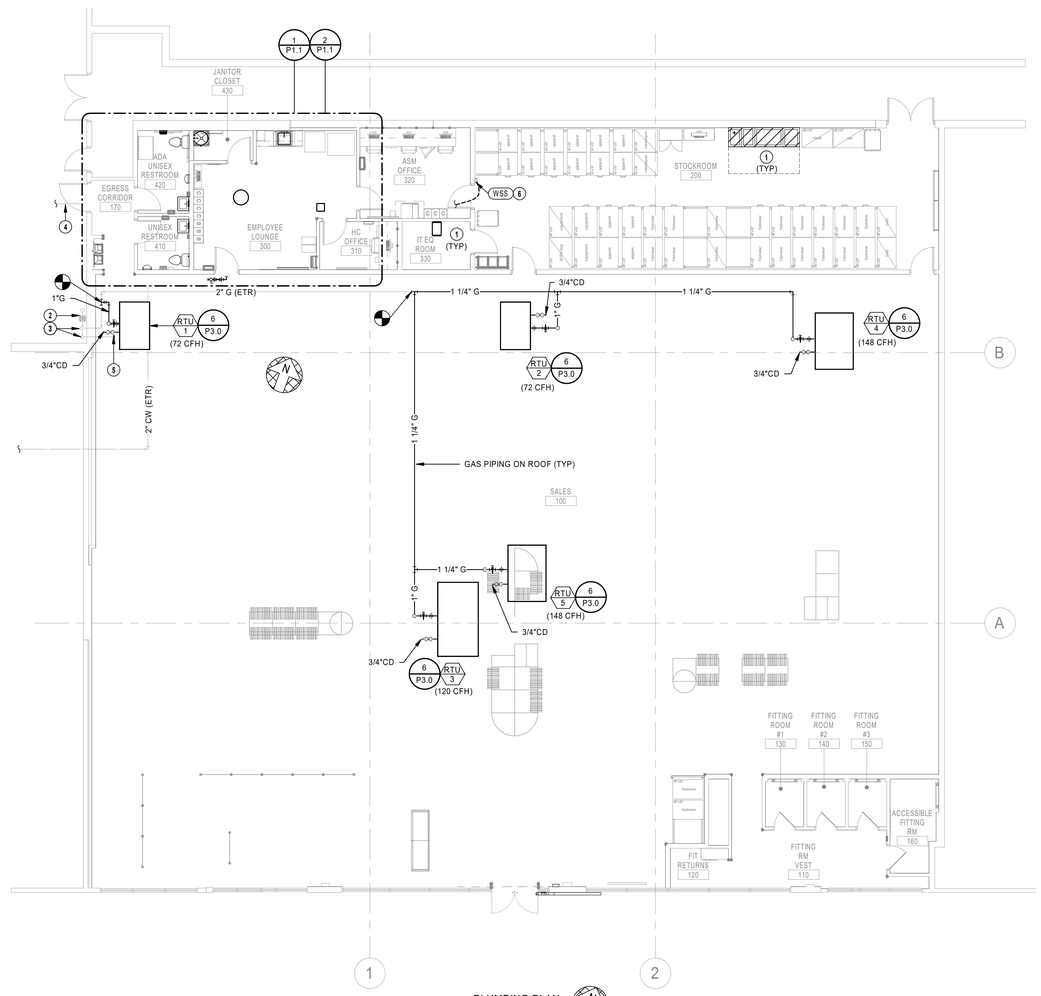

1 PLUMBING PLAN
1/8" = 1'-0"

BRADLEY E. CHAMBON

Architect:

brr

ARCHITECT OF RECORD:
BRR ARCHITECTURE, INC
8131 METCALF AVE
SUITE 300
OVERLAND PARK, KS 66204

www.brrarch.com

TEL: 913-262-9095
FAX: 913-262-9044

COPYRIGHT NOTICE
This drawing was prepared for use on a specific site contemporaneously with its issue date and it is not suitable for use on a different project site or at a later time. Use of this drawing for construction on another project requires the services of properly licensed architects and engineers. Reproduction of this drawing for reuse on another project is not authorized and may be contrary to the law.

Engineer:

HENDERSON ENGINEERS
8345 LENEXA DRIVE, SUITE 300
LENEXA, KS 66214
TEL 913.742.5000 FAX 913.742.5001
WWW.HENDERSONENGINEERS.COM
2050003713
FL CORPORATE NO. EB 7606
EXPIRES 2/28/2021

Project Owner:

NIKE, Inc.
One Bowerman Drive
Beaverton, OR 97005
(503) 671-6453
www.nike.com

Project Address:

NIKE FACTORY STORE
WATERFORD LAKES SHOPPING CENTER
449 N. ALAFAYA TRAIL
ORLANDO, FL 32828
TEMPLATE ISSUE DATE: 11/26/2018

Fixture Package:

UNITE

Stamp:

THIS DOCUMENT IS RELEASED FOR THE PURPOSE OF PRELIMINARY SUBMITTAL
BRADLEY E. CHAMBON
LICENSE # 82784

IT IS NOT TO BE USED FOR CONSTRUCTION PURPOSES

BRADLEY E. CHAMBON
LICENSE # 82784

Issued For:

PERMIT/BID

Issue Date:

11/06/2020

Revisions:

NO.	REASON	DATE

PROJECT MANAGER:
KH

CHECKED BY:

DRAWN BY:
Author

Project Number:

62301411

Sheet Title:

PLUMBING PLAN

Sheet Number:

P1.0

GENERAL PLAN NOTES:

1. REFER TO PLUMBING RISER DIAGRAMS ON SHEET P2.0 FOR ADDITIONAL PIPE SIZES AND DETAIL NOT SHOWN ON THE PLUMBING PLANS.

PLUMBING PLAN NOTES

1 DO NOT ROUTE WATER, VENT OR CONDENSATE PIPING OVER ELECTRICAL, TELEPHONE PANEL BOARDS OR IT TECHNOLOGY EQUIPMENT. COORDINATE PIPE ROUTINGS AROUND THE REQUIRED CLEARANCE SPACE OF PANELBOARDS.

2 ROUTE PIPING AS HIGH AND AS TIGHT TO STRUCTURE AS POSSIBLE. COORDINATE ROUTING WITH ALL EXISTING CONDITIONS, EQUIPMENT, STRUCTURAL ELEMENTS, DUCTWORK, ETC.

3 PROVIDE STEEL PLATE SHELF TO MOUNT WATER HEATER. PROVIDE 6" WATERTIGHT, RUST-PROOF DRAIN PAN AND DRAIN PIPE. DISCHARGE 3/4" T&P RELIEF VALVE DISCHARGE LINE AND 3/4" DRAIN PIPE INTO JANITOR'S SINK WITH AIR GAP PER CODE.

4 ROUTE 1/2" HWR DOWN AND CONNECT TO 1/2" HW WITHIN A MAXIMUM OF 2' FROM HOT WATER ROUGH-IN.

5 QUENCHER COLD AND HOT WATER DISPENSER PROVIDED BY OTHERS. PLUMBING CONTRACTOR TO INSTALL WATER DISPENSER PER MANUFACTURE'S RECOMMENDATIONS. PLUMBING CONTRACTOR TO PROVIDE AND INSTALL BACKFLOW PREVENTER UNDER COUNTER.

6 CONNECT NEW 1-1/2" CW TO EXISTING 2" CW MAIN IN THIS VICINITY. FIELD VERIFY EXACT LOCATION AND SIZE PRIOR TO START OF INSTALLATION.

7 PROVIDE MOTORIZED BALL VALVE MBV DOWNSTREAM OF LANDLORD PROVIDED WATER METER. REFER TO PLUMBING SPECIFICATIONS FOR MBV REQUIREMENTS.

EMS CONTROLS:
CONTRACTORS ARE RESPONSIBLE FOR COORDINATING ALL EQUIPMENT CONTROLS WITH EMS VENDOR PRIOR TO PURCHASE AND INSTALLATION. CONTRACTORS SHALL COORDINATE WITH EMS VENDOR TO PROVIDE ALL NECESSARY EQUIPMENT AND ACCESSORIES FOR A FULLY FUNCTIONING SYSTEM.

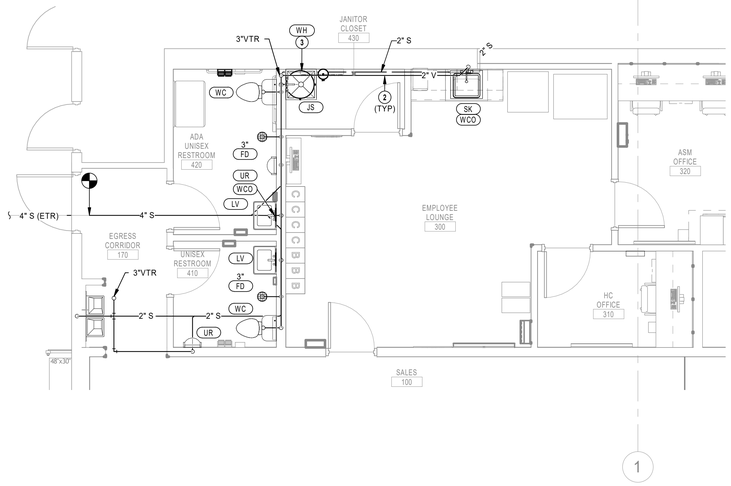

1 ENLARGED WASTE & VENT PLAN
1/4" = 1'-0"

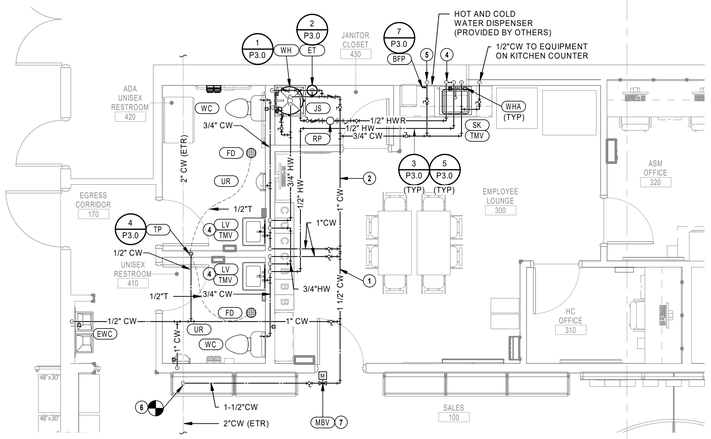

2 ENLARGED DOMESTIC WATER PLAN
1/4" = 1'-0"

Architect:

brr

ARCHITECT OF RECORD:
BRR ARCHITECTURE, INC
8131 METCALF AVE
SUITE 300
OVERLAND PARK, KS 66204

www.brrarch.com

TEL: 913-262-9095
FAX: 913-262-9044

COPYRIGHT NOTICE
This drawing was prepared for use on a specific site contemporaneously with its issue date and it is not suitable for use on a different project site or at a later time. Use of this drawing for reuse on another or on another project requires the services of properly licensed architects and engineers. Reproduction of this drawing for reuse on another project is not authorized and may be contrary to the law.

Engineer:

HENDERSON ENGINEERS
8345 LENEXA DRIVE, SUITE 300
LENEXA, KS 66214
TEL 913.742.5000 FAX 913.742.5001
WWW.HENDERSONENGINEERS.COM
2050003713
FL CORPORATE NO: EB 7606
EXPIRES 2/28/2021

Project Owner:

NIKE, Inc.
One Bowerman Drive
Beaverton, OR 97005
(503) 671-6453
www.nike.com

Project Address:

NIKE FACTORY STORE
WATERFORD LAKES SHOPPING CENTER
449 N. ALAFAYA TRAIL
ORLANDO, FL 32828
TEMPLATE ISSUE DATE: 11/26/2018

Fixture Package:

UNITE

Stamp:

THIS DOCUMENT IS RELEASED FOR THE PURPOSE OF PRELIMINARY SUBMITTAL
BRADLEY E. CHAMBON
LICENSE # 82784

IT IS NOT TO BE USED FOR CONSTRUCTION PURPOSES

BRADLEY E. CHAMBON
LICENSE # 82784

Issued For:

PERMIT/BID

Issue Date:

11/06/2020

Revisions:

NO.	REASON	DATE

PROJECT MANAGER:
KH

CHECKED BY:

DRAWN BY:
Author

Project Number:

62301411

Sheet Title:

PLUMBING ENLARGED PLANS

Sheet Number:

P1.1

BRADLEY E. CHAMBON

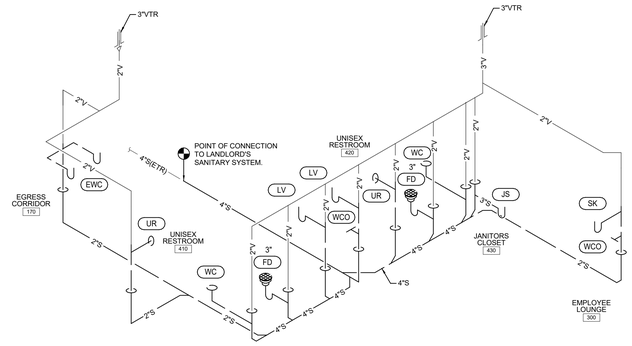

1 WASTE & VENT RISER DIAGRAM
NTS

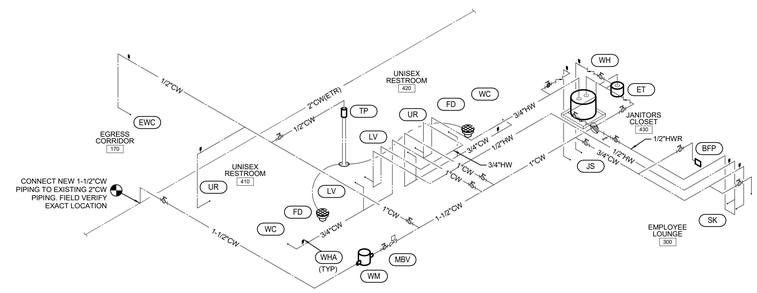

2 DOMESTIC WATER RISER DIAGRAM
NTS

LOW PRESSURE GAS PIPE SIZING CHART

PIPE SIZE	LOAD (CFH)
1/2"	34
3/4"	72
1"	135
1-1/4"	278
1-1/2"	416
2"	802
2-1/2"	1,278
3"	2,259
4"	4,608
6"	13,498

OPERATING PRESSURE OF 7"WC WITH A PRESSURE DROP OF 0.5"WC
TOTAL DEVELOPED LENGTH = 200 FEET
TOTAL CONNECTED LOAD = 560 CFH
BASED ON NFPA 54 EQUATION 4-1

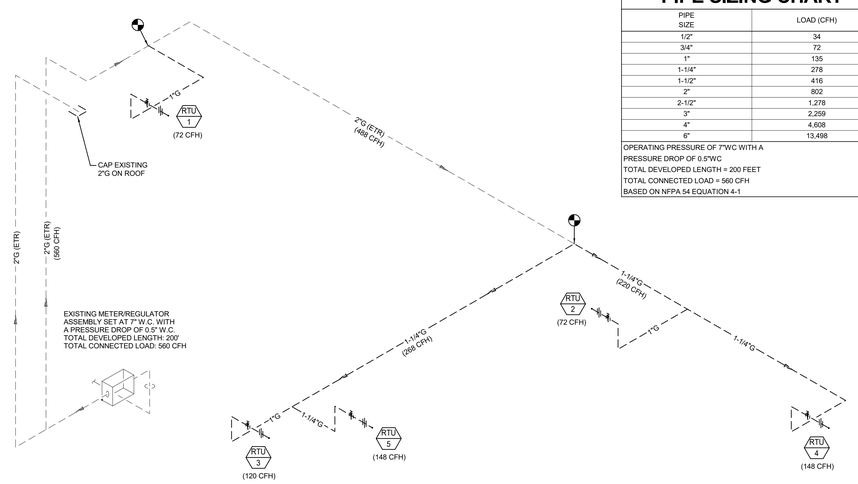

3 NATURAL GAS RISER DIAGRAM
NTS

Architect:

brr

ARCHITECT OF RECORD:
BRR ARCHITECTURE, INC
8131 METCALF AVE
SUITE 300
OVERLAND PARK, KS 66204

www.brrarch.com

TEL: 913-262-9095
FAX: 913-262-9044

COPYRIGHT NOTICE

This drawing was prepared for use on a specific site contemporaneously with its issue date and it is not suitable for use on a different project site or at a later time. Use of this drawing for reuse on another project or another project requires the services of properly licensed architects and engineers. Reproduction of this drawing for reuse on another project is not authorized and may be contrary to the law.

Engineer:

HENDERSON ENGINEERS
8345 LENEXA DRIVE, SUITE 300
LENEXA, KS 66214
TEL 913.742.5000 FAX 913.742.5001
WWW.HENDERSONENGINEERS.COM
2050003713
FL CORPORATE NO. EB 7606
EXPIRES 2/28/2021

Project Owner:

NIKE, Inc.
One Bowerman Drive
Beaverton, OR 97005
(503) 671-6453
www.nike.com

Project Address:

NIKE FACTORY STORE
WATERFORD LAKES SHOPPING CENTER
449 N. ALAFAYA TRAIL
ORLANDO, FL 32828
TEMPLATE ISSUE DATE: 11/26/2018

Fixture Package:

UNITE

Stamp:

THIS DOCUMENT IS RELEASED FOR THE PURPOSE OF PRELIMINARY SUBMITTAL
BRADLEY E. CHAMBON
LICENSE # 82784

IT IS NOT TO BE USED FOR CONSTRUCTION PURPOSES

BRADLEY E. CHAMBON
LICENSE # 82784

Issued For:

PERMIT/BID

Issue Date:

11/06/2020

Revisions:

NO.	REASON	DATE

PROJECT MANAGER:
KH
CHECKED BY:
DRAWN BY:
Author

Project Number:

62301411

Sheet Title:

PLUMBING RISERS DIAGRAMS

Sheet Number:

P2.0

BRADLEY E. CHAMBON

PLUMBING SYMBOLS

THIS IS A MASTER LEGEND AND NOT ALL SYMBOLS OR ABBREVIATIONS ARE USED. V2.01

STANDARD MOUNTING HEIGHTS

REFER TO THE ARCHITECTURAL DRAWINGS FOR PLUMBING FIXTURE MOUNTING HEIGHTS. UNO, INSTALL PLUMBING FIXTURES WITH THE MOUNTING HEIGHTS AS LISTED BELOW WITH FINAL APPROVAL BY THE ARCHITECT.

LAVATORY OR SINK – ADA ACCESSIBLE	34" FLOOR TO RIM
URINAL – ADA ACCESSIBLE	17" FLOOR TO RIM
WATER CLOSET – ADA ACCESSIBLE	17" TO 19" FLOOR TO TOP OF SEAT
JANITOR'S SINK FAUCET FITTING	42" FLOOR TO CENTERLINE

USE THE DEFAULT MOUNTING HEIGHTS SHOWN ABOVE UNLESS NOTED OTHERWISE IN THE SPECIFICATIONS OR ELSEWHERE. MOUNTING HEIGHTS LISTED ARE ABOVE FINISHED FLOOR (AFF) OR ABOVE FINISHED GRADE (AFG). ALL DEVICES SHALL BE INSTALLED IN COMPLIANCE WITH CURRENT ADA AND LOCAL REQUIREMENTS.

ANNOTATION

- (1) PLUMBING PLAN NOTE CALLOUT
- (1) PLUMBING EQUIPMENT DESIGNATION. (CONTRACTOR FURNISHED AND INSTALLED). REFER TO PLUMBING FIXTURE OR EQUIPMENT SCHEDULES
- [1] EQUIPMENT DESIGNATION (OWNER FURNISHED, CONTRACTOR INSTALLED)
- CU 1 MECHANICAL EQUIPMENT DESIGNATION (CONTRACTOR FURNISHED AND INSTALLED UNLESS NOTED OTHERWISE)
- CONNECTION POINT OF NEW WORK TO EXISTING
- 1 / P1 DETAIL REFERENCE UPPER NUMBER INDICATES DETAIL NUMBER LOWER NUMBER INDICATES SHEET NUMBER

LINETYPE LEGEND

THROUGHOUT THE DRAWINGS DIFFERENT LINETYPES ARE USED IN COMBINATION WITH THE SYMBOLS TO INDICATE THE STATUS OF ITEMS AS EXISTING, TO BE DEMOLISHED, TO BE INCLUDED AS PART OF NEW WORK AND/OR ITEMS WHICH ARE ANTICIPATED TO BE PROVIDED IN THE FUTURE. THE STATUS OF ITEMS USING THESE LINETYPES ARE RELATIVE TO THE VIEW IN WHICH THEY APPEAR. PHASING SHOWN IN DRAWINGS IS NOT INTENDED TO FULLY DESCRIBE ALL NECESSARY CONSTRUCTION PHASING, WHICH IS DETERMINED BY THE CONTRACTOR AS PART OF THEIR RESPONSIBILITIES. ANY SUCH PHASES DESCRIBED IN THE CONSTRUCTION DOCUMENTS ARE GENERAL AND ONLY INTENDED TO INDICATE A BROAD ORDER FOR THE SAKE OF DESCRIBING THE PROJECT. THE FOLLOWING LINETYPES MAY BE USED ON ANY DEVICE, EQUIPMENT, NOTE, LINE, SHAPE, ETC.

EXISTING ——— NEW ———
DEMOLISH — — — — FUTURE - - - - - -

PIPING SYMBOLS

- FLOOR SINK (FS), SIZE & TYPE
- FLOOR DRAIN (FD), SIZE & TYPE
- ROOF DRAIN (RD), SIZE & TYPE
- BALL VALVE
- CONTROL VALVE
- SHUTOFF VALVE
- CHECK VALVE
- BALANCING VALVE WITH PRESSURE PORTS
- WATER METER
- STRAINER
- STRAINER WITH BLOWOFF
- PRESSURE REDUCING VALVE
- GAS PRESSURE REGULATOR
- THERMOSTATIC MIXING VALVE
- BACKFLOW PREVENTER
- PRESSURE GAUGE
- THERMOMETER
- UNION
- FLANGE CONNECTION
- HOSE BIBB (HB)
- CLEANOUT
- CAP
- WALL CLEANOUT (WCO)
- FLOOR CLEANOUT (FCO)
- EXTERIOR CLEANOUT (ECO)
- ELBOW UP
- ELBOW DOWN
- TEE UP
- TEE DOWN
- RECIRCULATION PUMP
- P-TRAP
- GAS COCK
- TRAP PRIMER
- TRAP PRIMER WITH DISTRIBUTION UNIT

PIPING LINETYPES

———CW———	DOMESTIC COLD WATER (CW)
———HW———	DOMESTIC HOT WATER (HW)
———HWR———	DOMESTIC HOT WATER RECIRC. (HWR)
———T———	TRAP PRIMER LINE (T)
———S———	SOIL PIPING - ABOVE FLOOR (S)
— — -S- — —	SOIL PIPING - BELOW FLOOR (S)
———CWV———	COMBINATION WASTE AND VENT - ABOVE FLOOR (CWV)
— — CMV — —	COMBINATION WASTE AND VENT BELOW FLOOR (CMV)
———CD———	CONDENSATE DRAIN (CD)
———V———	VENT PIPING (V)

ABBREVIATIONS

ADA	AMERICANS WITH DISABILITIES ACT	MIN	MINIMUM
AFF	ABOVE FINISHED FLOOR	N/C	NORMALLY CLOSED
AFG	ABOVE FINISHED GRADE	N/O	NORMALLY OPEN
AHU	AIR HANDLING UNIT	NIC	NOT IN CONTRACT
AP	ACCESS PANEL	ORD	OVERFLOW ROOF DRAIN
BAS	BUILDING AUTOMATION SYSTEM	PDI	PLUMBING DRAINAGE INSTITUTE
BFF	BELOW FINISHED FLOOR	PH/Ø	PHASE
BFG	BELOW FINISHED GRADE	PRV	PRESSURE REDUCING VALVE
BOP	BOTTOM OF PIPE	PVC	POLYVINYL CHLORIDE
BOS	BOTTOM OF STRUCTURE	RCP	REINFORCED CONCRETE PIPE
BTU	BRITISH THERMAL UNIT	RD	ROOF DRAIN
CP	CONDENSATE PUMP	RPM	REVOLUTIONS PER MINUTE
CPVC	CHLORINATED POLYVINYL CHLORIDE	RTU	ROOFTOP UNIT
CU	COPPER	SF	SQUARE FEET
DI	DUCTILE IRON	SP	SUMP
DN	DOWN	SS	STAINLESS STEEL SANITARY SEWER, SOIL STACK
DFU	DRAINAGE FIXTURE UNIT	TDH	TOTAL DYNAMIC HEAD
DS	DOWNSPOUT	TFA	TO FLOOR ABOVE
(E)	EXISTING	TFB	TO FLOOR BELOW
EMS	ENERGY MANAGEMENT SYSTEM	TYP	TYPICAL
ETR	EXISTING TO REMAIN	UL	UNDERWRITERS LABORATORIES, INC.
EWC	ELECTRIC WATER COOLER	UNO	UNLESS NOTED OTHERWISE
FD	FLOOR DRAIN	UPS	UNINTERRUPTIBLE POWER SUPPLY
FFA	FROM FLOOR ABOVE	VCP	VITRIFIED CLAY PIPE
FFB	FROM FLOOR BELOW	VFD	VARIABLE FREQUENCY DRIVE
FF	FINISHED FLOOR	VS	VENT STACK
FL	FLOW LINE	VTR	VENT THROUGH ROOF
FLA	FULL LOAD AMPS	W/	WITH
FLR	FLOOR	W/O	WITHOUT
GPM	GALLONS PER MINUTE	WC	WATER COLUMN
HD	HEAD, HUB DRAIN	WS	WASTE STACK
HZ	HERTZ	WSFU	WATER SUPPLY FIXTURE UNIT
IE	INVERT ELEVATION	WVS	WASTE VENT STACK
IN WC	INCHES OF WATER COLUMN		
JB	JUNCTION BOX		
J-BOX	JUNCTION BOX		
KW	KILOWATT		
MAU	MAKE-UP AIR UNIT		
MAX	MAXIMUM		
MBH	1000 BTU PER HOUR		
MH	MANHOLE		

ELECTRIC STORAGE WATER HEATER SCHEDULE

MARK	MANUFACTURER/ MODEL#	AREA SERVED	TANK SIZE (GALLONS)	ELECTRICAL DATA			RECOVERY (GPH)	NOTES
				VOLTS	PHASE	KW		
WH	DEL-20	BACK OF HOUSE	20	480	1	2.0	14	A, B, C

NOTES:

A. 60° TEMPERATURE RISE WITH 120°F OPERATING TEMPERATURE.
B. SINGLE ELEMENT, SURFACE MOUNTED THERMOSTAT.
C. "LOW BOY" DESIGN.

EXPANSION TANK SCHEDULE

MARK	MANUFACTURER / MODEL #	TANK SIZE (GALLONS)	MIN. ACCEPTANCE VOLUME (GALLONS)	AIR PRESSURE SETTING (PSI)	SERVICE
ET	AMTROL ST-5	2	0.9	125	WATER HEATER

NOTES:

A. CHARGE TANK WITH AIR TO IDENTICAL PRESSURE AS STATIC DOMESTIC WATER PRESSURE.

RECIRCULATION PUMP SCHEDULE

MARK	MANUFACTURER / MODEL#	LOCATION	GPM	HEAD (FT.)	CONNECTION SIZE	IMPELLER SIZE (IN.)	ELECTR...			NOTES
							VOLTS	PHASE	HP	
RP	BELL & GOSSETT # NBF-9U	JANITORS CLOSET	1	7	3/4"	N/A	120	1	1/18	A, B, C

NOTES:

A. ALL LEAD FREE CAST BRONZE BOOSTER.
B. PROVIDE WITH STRAINER UPSTREAM OF PUMP.
C. PROVIDE ADJUSTABLE, SURFACE MOUNTED AQUASTAT - HONEYWELL L6006C.
D. INTERLOCK RECIRCULATION PUMP INTO ENERGY MANAGEMENT SYSTEM.

PLUMBING PIPE MATERIAL SCHEDULE

PIPING SYSTEM	ABBREVIATION	PIPING MATERIAL
SANITARY DRAINAGE & VENT (ABOVE GRADE)	S, W OR V	HUBLESS CAST IRON
SANITARY DRAINAGE & VENT (BELOW GRADE)	S, W OR V	SERVICE WEIGHT CAST IRON
POTABLE WATER (ABOVE GRADE)	CW, HW OR HWR	TYPE L HARD DRAWN COPPER
POTABLE WATER - 2" & SMALLER (BELOW GRADE)	CW, HW OR HWR	TYPE K SOFT ANNEALED COPPER
CONDENSATE DRAIN - 1" & SMALLER	CD	TYPE M HARD DRAWN COPPER
INDIRECT DRAIN - 1"& SMALLER	ID	TYPE M HARD DRAWN COPPER
REFER TO SPECIFICATIONS FOR FITTINGS, INSTALLATION REQUIREMENTS AND FURTHER INFORMATION		

FIXTURE BRANCH CONNECTION SCHEDULE

FIXTURE	COLD WATER	HOT WATER	WASTE	VENT
JANITOR'S SINK	1/2"	1/2"	3"	2"
FLOOR DRAIN			2"	2"
SINK	1/2"	1/2"	2"	2"
WATER CLOSET (TANK)	1/2"		4"	2"
URINAL	1"		2"	2"
LAVATORY/HAND SINK	1/2"	1/2"	2"	1 1/2"
WATER COOLER	1/2"		2"	1 1/2"

NOTE: PIPE SIZES SHOWN ARE MINIMUM.

PLUMBING FIXTURE SCHEDULE

PLUMBING PLAN MARK	Description
BFP	DUAL CHECK VALVE WITH ATMOSPHERIC PORT: WATTS # SD-3, MEETING ASSE 1022 AND NSF 18, 316 STAINLESS STEEL BODY, 3/8" INLET AND OUTLET, ATMOSPHERIC PORT, AND WYE PATTERN STRAINER. PROVIDE 3/4" INDIRECT DRAIN FROM ATMOSPHERIC PORT AND DISCHARGE TO DRAIN WITH AIR GAP.
EWC	ELECTRIC WATER COOLER (ADA ACCESSIBLE): ELKAY # EZSTL8C WALL-MOUNTED, BARRIER FREE, DUAL-LEVEL, FRONT AND SIDE PUSH ACTUATOR BARS, STAINLESS STEEL BOWL, FLEXIBLE POLYESTER ELASTOMER SAFETY BUBBLER AND GALVANIZED STEEL FRONT AND SIDES, CHILLER WITH 8.0 GALLONS PER HOUR CAPACITY, 50° F DRINKING WATER AT 80° F INLET TEMPERATURES 90° F ROOM TEMPERATURE. TRIM: McGUIRE # 2165CC COMPRESSION ANGLE STOP VALVE WITH RISER AND ESCUTCHEON, McGUIRE # 8912-C-F 1-1/2" 17 GAUGE TUBULAR CHROME PLATED BRASS ADJUSTABLE P-TRAP AND WASTE ARM WITH CLEANOUT PLUG AND ESCUTCHEON, AND SUITABLE CARRIER WITH STANCHIONS TO FLOOR. ELECTRICAL REQUIREMENTS: 120-VOLT, 3.7 FULL LOAD AMPS.
FD	FLOOR DRAIN: ZURN # ZN-415B-NH-P, CAST IRON BODY AND CLAMPING COLLAR, ADJUSTABLE 5" ROUND NICKEL BRONZE STRAINER. USE PUSH-ON JOINT OF OUTLET SIZE AS SHOWN ON PLANS.
JS	JANITOR'S SINK: FIAT # MSB-2424, 24" x 24" x 10" HIGH MOLDED STONE BASIN WITH INTEGRAL STAINLESS STEEL DRAIN BODY. FAUCET: FIAT # 830-AA FAUCET WITH WALL BRACE, INTEGRAL VACUUM BREAKER, PAIL HOOK, AND 3/4" MALE HOSE THREADED OUTLET. SECURE FAUCET IN WALL WITH BACKBOARD. TRIM: # MSG-2424 HEAVY GAUGE, STAINLESS STEEL WALL SURROUNDS, # 832-AA THREE FOOT LONG REINFORCED HOSE WITH 3/4" CHROME COUPLING AND WALL HOOK, # E-77-AA EXTRUDED VINYL BUMPER GUARD, AND # 889-CC 24" STAINLESS STEEL MOP HANGER.
LV	WALL-MOUNTED LAVATORY (ADA ACCESSIBLE): AMERICAN STANDARD # 0355.012 "LUCERNE" 20-1/2" X 18-1/4" RECTANGULAR WALL MOUNTED WHITE VITREOUS CHINA FIXTURE WITH FAUCET LEDGE AND FRONT OVERFLOW. FAUCET: CHICAGO FAUCET # 802-VE2805XKCP 4" CENTERSET, VANDAL RESISTANT, FAUCET WITH # 390 LEVER HANDLES, CERAMIC QUARTER TURN CARTRIDGES AND # E2805 0.35 GPM AERATOR. TRIM: McGUIRE # 155A GRID DRAIN WITH TAILPIECE, McGUIRE # 2165CCLK LOOSE KEY COMPRESSION ANGLE STOP VALVES WITH RISERS AND ESCUTCHEONS, McGUIRE # B8872CF 1-1/4" 17 GAUGE CAST CHROME PLATED BRASS ADJUSTABLE P-TRAP AND WASTE ARM WITH CLEANOUT PLUG AND ESCUTCHEON, CONCEALED ARM CARRIER WITH STANCHIONS TO FLOOR, AND PLUMBEREX "PRO-EXTREME" # X-4222 INSULATION KIT FOR WATER AND WASTE PIPES.
MBV	MOTORIZED BALL VALVE: LINE SIZE DEELAT "SKU" #D1156055 WITH THREE PIECE LEAD FREE BODY, SWEAT ENDS AND FULL PORT BRASS BALL WITH MOTORIZED ACTUATOR WITH PERMANENTLY LUBRICATED GEAR TRAIN AND BEARINGS, 2 SPDT SWITCHES, NEMA 4 ENCLOSURE AND STAINLESS STEEL MOUNTING KIT. ELECTRICAL REQUIREMENTS: 120V @ 1FLA
SK	SINK (ADA ACCESSIBLE): ELKAY # LRAD-2522-55-3, 25" x 22" x 5-1/2" DEEP, SINGLE COMPARTMENT, SELF-RIMMING, 18 GAUGE TYPE 302 STAINLESS STEEL, FIXTURE WITH FAUCET LEDGE. SET IN BED OF PUTTY. FAUCET: ELKAY # LK800HA10T4, DECK MOUNTED FAUCET WITH WRIST BLADE HANDLES, QUARTER TURN CERAMIC CARTRIDGES AND 0.5 GPM AERATOR. TRIM: McGUIRE # 2165CC WHEEL HANDLE ANGLE STOP VALVES WITH RISERS AND ESCUTCHEONS, McGUIRE # 151M CUP STRAINER WITH 1-1/2" 17 GAUGE TAILPIECE, McGUIRE # B8912CF 1-1/2" 17 GAUGE CAST CHROME PLATED BRASS ADJUSTABLE P-TRAP WITH BRASS CLEANOUT AND ESCUTCHEON, AND PLUMBEREX "PRO-EXTREME" # X-4222 INSULATION KIT FOR WATER AND WASTE PIPES.
TMV	THERMOSTATIC MIXING VALVE: POWERS # LFG480, SOLID LEAD FREE BRASS BODY, THERMOSTATIC WAX ELEMENT, CORROSION RESISTANT INTERNAL PARTS, AND INTEGRAL CHECKS, ASSE 1070 COMPLIANT, CAPABLE OF 1.6 GPM WITH A 20 PSI DIFFERENTIAL AND A MINIMUM FLOW RATE OF 0.25 GPM. SET TEMPERATURE TO 110F FOR DUAL TEMPERATURE LAVATORIES AND HAND SINKS, 100F FOR SINGLE TEMPERATURE LAVATORIES AND HAND SINKS AND 120F FOR SINKS. MOUNT BELOW THE PLUMBING FIXTURE WHERE INDICATED ON PLAN(S).
TP	TRAP PRIMER: PRECISION PLUMBING PRODUCTS # PR-500 "PRIME RITE", CORROSION RESISTANT BRASS BODY, "O" RING SEALS, 1/2" INLET AND OUTLET, AND INTEGRAL VACUUM BREAKER. INSTALL THE VALVE AT A MINIMUM OF 12" ABOVE FINISHED FLOOR. PROVIDE WITH DISTRIBUTION # DU-2 FOR TWO, # DU-3 FOR THREE, OR # DU-4 FOR FOUR DRAIN CONNECTIONS.
UR	URINAL: ZURN # Z5755 0.125 GPF, ECOVANTAGE, ULTRA LOW CONSUMPTION URINAL SYSTEM, WHITE VITREOUS CHINA FIXTURE WITH FLUSHING RIM, 3/4" TOP SPUD, AND WASHOUT FLUSHING ACTION. MEETS DEFINITION FOR HIGH EFFICIENCY URINAL (HEU). SYSTEM COMES COMPLETE WITH VALVE: ZURN # ZTR6203-ULF-LL EXPOSED CHROME-PLATED, BATTERY POWERED, SENSOR OPERATED, SOLENOID TYPE, FLUSHOMETER VALVE WITH FLOW REGULATOR AND INTERNAL FILTER, INTEGRAL SCREWDRIVER STOP WITH VANDAL RESISTANT CAP, VACUUM BREAKER, SOLID RING PIPE SUPPORT, AND SWEAT ADAPTER KIT. TRIM: SUITABLE CARRIER WITH STANCHIONS TO FLOOR.
WC	FLOOR-MOUNTED WATER CLOSET (ADA ACCESSIBLE): AMERICAN STANDARD "CADET FLOWISE" #2467.100 TANK TYPE WHITE VITREOUS CHINA FIXTURE WITH ELONGATED BOWL, 1.1 GALLON PER FLUSH, PRESSURE ASSISTED, SIPHON JET ACTION AND CLOSE COUPLED TANK. INTALL SIDE MOUNTED CHROME TRIP LEVER ON THE WIDE SIDE OF THE STALL. REFERENCE DRAWINGS FOR EXACT NUMBER OF RIGHT AND LEFT HAND TRIP LEVER TANKS REQUIRED. TRIM: AMERICAN STANDARD #5324.019 WHITE OPEN-FRONT CONTOURED, SOLID PLASTIC, HEAVY DUTY, SEAT LESS COVER WITH SELF-SUSTAINING CHECK HINGES AND STAINLESS STEEL BOLTS, McGUIRE # 2166CC ANGLE STOP VALVE WITH RISER AND CHROME-PLATED ESCUTCHEON.
WCO	WALL CLEANOUT: JAY R. SMITH # 4530S, CAST IRON CLEANOUT TEE, COUNTER SUNK PLUG, STAINLESS STEEL ROUND COVER AND SCREW, AND IRON PLUG WITH GASKET SEAL. REFER TO SPECIFICATIONS FOR INSTALLATION.
WHA	WATER HAMMER ARRESTER: PRECISION PLUMBING PRODUCTS, HARD DRAWN COPPER BODY WITH WROUGHT COPPER FITTINGS, PISTON TYPE WITH LUBRICATED EPDM "O" RING SEALS, MEETING ASSE 1010 OR PDI WH-201. PROVIDE PDI SIZES "A" THROUGH "F" AS SHOWN ON PLANS. PROVIDE SIZE "A" UNLESS SHOWN OTHERWISE ON THE PLANS.
WSS	WATER SHUT OFF SWITCH: INTERLOCK WITH MBV. REFER TO ELECTRICAL FOR MUSHROOM SWITCH SPECIFICATIONS. ELECTRICAL REQUIREMENTS: 120 VOLT SINGLE PHASE, 2.5 WATTS

FIXTURES IN THIS SCHEDULE OR THEIR APPROVED EQUIVALENT ARE PROVIDED BY THE PLUMBING CONTRACTOR. SUBMIT SHOP DRAWINGS ON EACH OF THESE ITEMS. REFER TO SPECIFICATIONS FOR FURTHER INFORMATION AND INSTALLATION REQUIREMENTS. VERIFY ROUGH-IN REQUIREMENTS WITH MANUFACTURER'S INSTALLATION INSTRUCTIONS AND INSTALL PER MANUFACTURER'S RECOMMENDATIONS. REFER TO THE ARCHITECTURAL DRAWINGS FOR THE PLUMBING FIXTURE MOUNTING HEIGHTS.

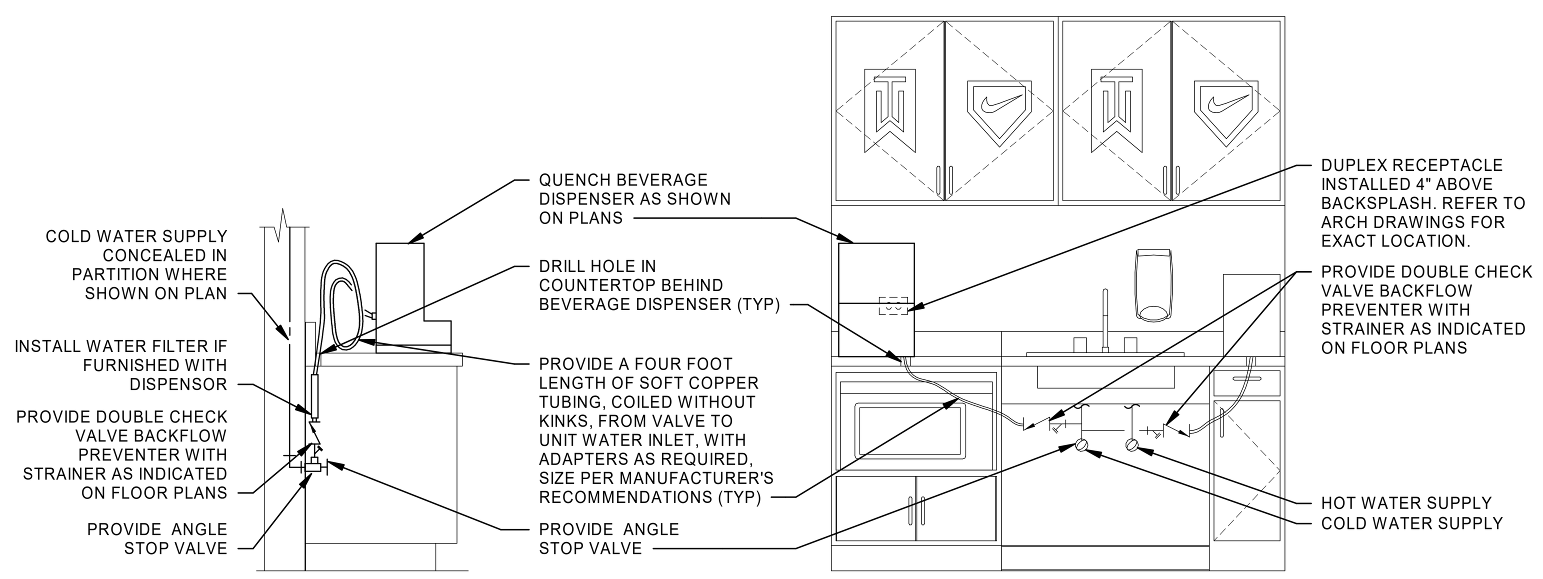

PIPING ARRANGEMENT SHOWN IS SCHEMATIC. ADJUST TO SUIT FIELD CONDITIONS AND EQUIPMENT MANUFACTURER'S INSTALLATION INSTRUCTIONS. AIR GAP ON INTERNAL WATER FILL DEVICE PROVIDES BACKFLOW PREVENTION. VERIFY IF LOCAL AUTHORITIES REQUIRE SUPPLEMENTAL PROTECTION.

(7) WATER DISPENSER PIPING DETAIL
NTS

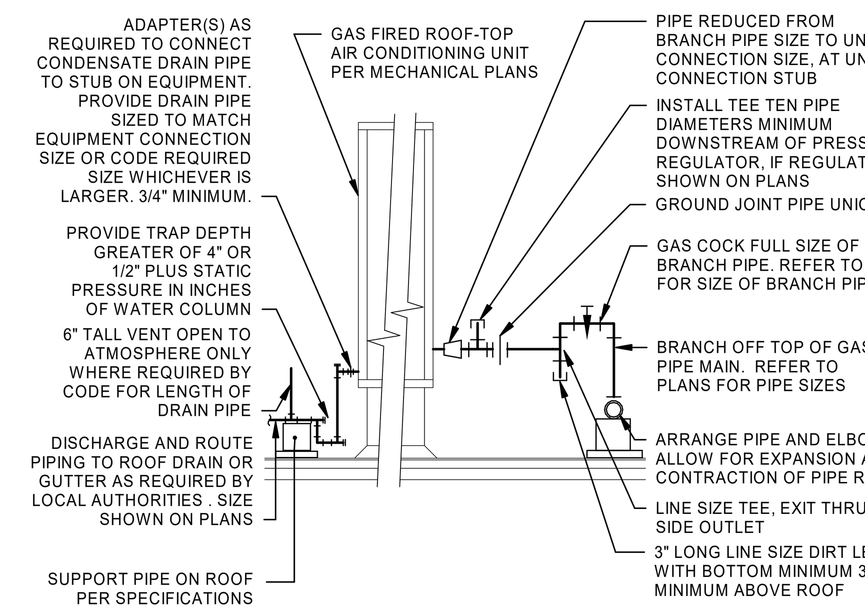

ARRANGEMENT SHOWN IS SCHEMATIC. ADJUST TO SUIT FIELD CONDITIONS. PROVIDE CONNECTIONS SHOWN IN EQUIPMENT MANUFACTURER'S INSTALLATION INSTRUCTIONS. VERIFY CONNECTION LOCATIONS BEFORE INSTALLING PIPE RUNS. REFER TO SPECIFICATIONS FOR PIPE AND FITTING MATERIALS AND INSTALLATION. PROVIDE DIELECTRIC UNION IF CONNECTING DISSIMILAR METALS. FOR PIPE SIZE(S) REFER TO FLOOR PLANS, OR CODE REQUIREMENTS FOR HVAC UNIT TONNAGE. PROVIDE GAS COCK, UNION AND DIRT LEG SAME SIZE AS BRANCH PIPE. SLOPE CONDENSATE PIPE AS MUCH AS POSSIBLE TOWARD DISCHARGE, 2% MINIMUM. PROVIDE CLEANOUTS IN ENDS AND TURNS OF PIPE PER LOCAL CODE REQUIREMENTS: ADAPTER WITH THREADED CLEANOUT PLUG. PROVIDE MINIMUM 6" CLEARANCE TO ROOF UNDER PIPES.

(6) CONNECTIONS TO ROOF-TOP UNIT
NTS

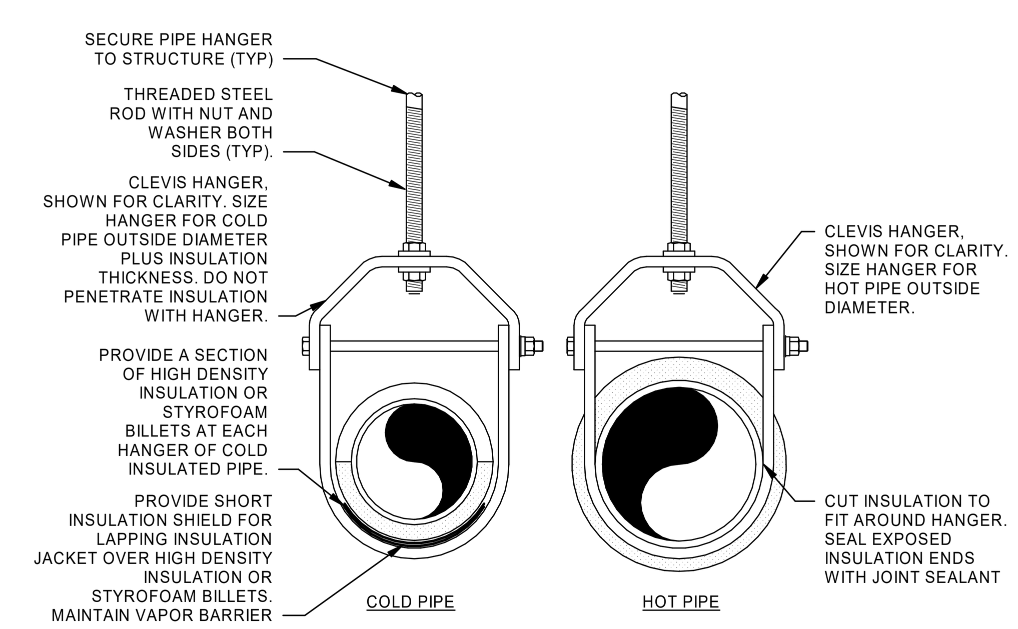

REFER TO SPECIFICATIONS FOR INSULATION TYPES, INSULATION THICKNESSES, HANGER TYPES, HANGER ROD CONNECTIONS TO STRUCTURE AND HANGER SPACING.

(5) PIPE HANGER DETAIL
NTS

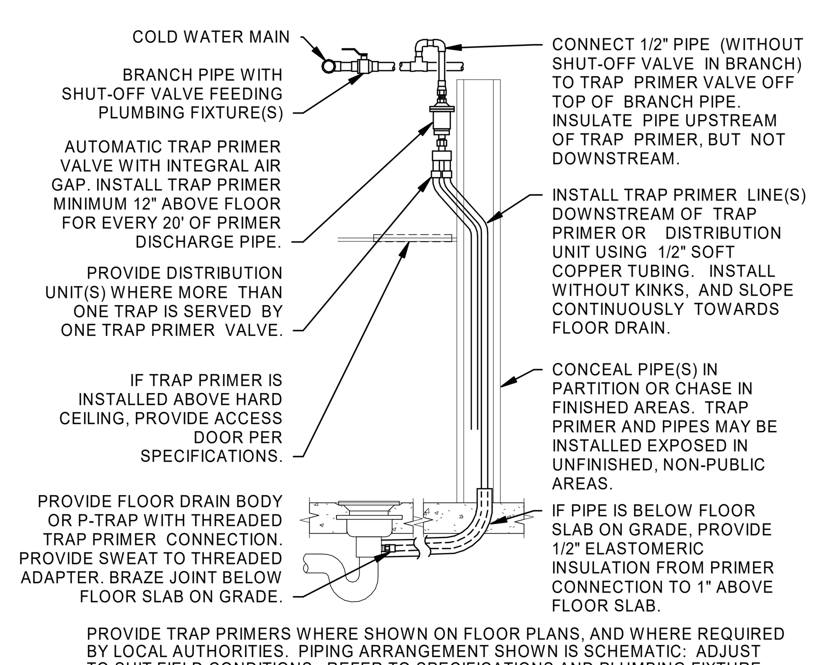

PROVIDE TRAP PRIMERS WHERE SHOWN ON FLOOR PLANS, AND WHERE REQUIRED BY LOCAL AUTHORITIES. PIPING ARRANGEMENT SHOWN IS SCHEMATIC. ADJUST TO SUIT FIELD CONDITIONS. REFER TO SPECIFICATIONS AND PLUMBING FIXTURE SCHEDULE FOR MORE INFORMATION. INSTALL TRAP PRIMER VALVE AND DISTRIBUTION UNIT PER MANUFACTURER'S RECOMMENDATIONS.

(4) TRAP PRIMER OVERHEAD
NTS

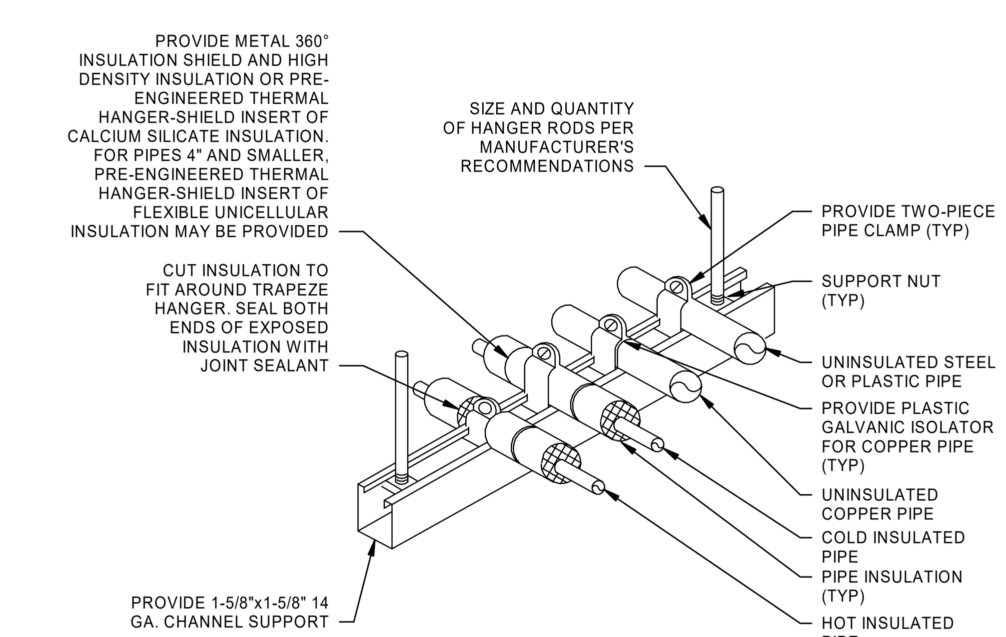

PIPING ARRANGEMENT SHOWN IS SCHEMATIC. ADJUST TO SUIT FIELD CONDITONS. REFER TO SPECIFICATIONS FOR MORE INFORMATION. PIPE AND CONDUIT OF ALL TRADES MAY BE COMBINED ON THE SAME SUPPORT CHANNEL. COORDINATE SUPPORT CHANNEL LENGTH WITH PIPING AND CONDUIT TO BE SUPPORTED. SUPPORT CHANNEL SPACING SHALL BE DETERMINED BY SMALLEST PIPE TO BE SUPPORTED. CHANNEL SUPPORT MAY BE USED AS A WALL BRACKET, ATTACH TO WALL WITH ANCHOR BOLTS PER SPECIFICATIONS. FOR HORIZONTAL INSULATED PIPING, ATTACH CLAMPS AS INDICATED ABOVE, FOR VERTICAL INSULATED PIPING, ATTACH CLAMPS TO THE PIPE AND SEAL INSULATION AT BOTH CLAMP ENDS.

(3) TRAPEZE PIPE HANGER
NTS

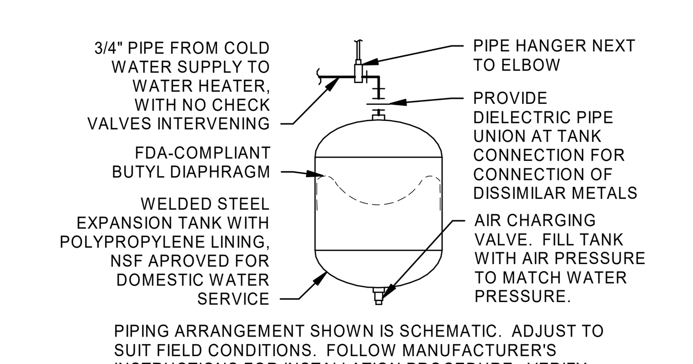

PIPING ARRANGEMENT SHOWN IS SCHEMATIC. ADJUST TO SUIT FIELD CONDITIONS. FOLLOW MANUFACTURER'S INSTRUCTIONS FOR INSTALLATION PROCEDURE. VERIFY PROPER OPERATION WHEN INSTALLED. PROVIDE SEISMIC STRAP OR BRACING WHEN REQUIRED BY LOCAL AUTHORITIES.

(2) SMALL EXPANSION TANK
NTS

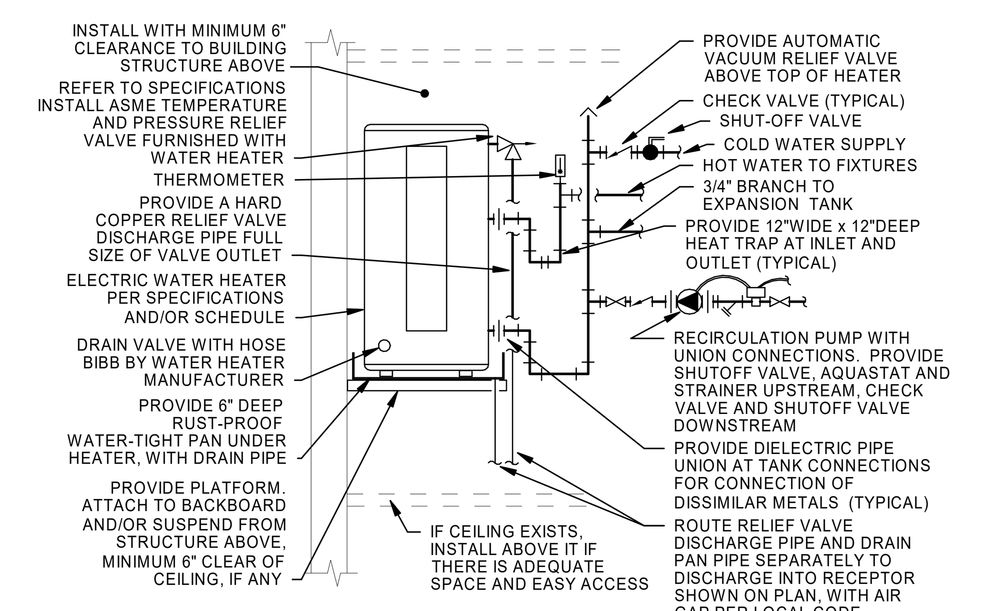

REFER TO SPECIFICATIONS, SCHEDULES AND NOTES FOR MORE INFORMATION. PIPING ARRANGEMENT SHOWN IS SCHEMATIC. ADJUST TO SUIT FIELD CONDITIONS. VERIFY CONNECTION SIZES AND LOCATIONS WITH WATER HEATER FURNISHED. REFER TO FLOOR PLANS FOR PIPE SIZES. PROVIDE SEISMIC BRACE WHERE REQUIRED. PROVIDE WATER HEATER PLATFORM ATTACHED TO WALL AND/OR SUSPENDED FROM STRUCTURE ABOVE. INSTALL BOTTOM OF PLATFORM AT MINIMUM 6'-6" ABOVE FLOOR IF ABOVE JANITOR'S SINK; OTHERWISE HIGH AS POSSIBLE. POWER WIRING AND DISCONNECT ARE SPECIFIED BY ELECTRICAL. INTERLOCK OF AQUASTAT WITH RECIRCULATION PUMP IS SPECIFIED BY ELECTRICAL.

(1) ELECTRIC WATER HEATER OVERHEAD WITH RECIRCULATION PUMP SYSTEM
NTS

BRADLEY E. CHAMBON

Architect:
brr
ARCHITECT OF RECORD:
BRR ARCHITECTURE, INC
8131 METCALF AVE
SUITE 300
OVERLAND PARK, KS 66204
www.brrarch.com
TEL: 913-262-9095
FAX: 913-262-9044

COPYRIGHT NOTICE
This drawing was prepared for use on a specific site contemporaneously with its issue date and it is not suitable for use on a different project site or at a later time. Use of this drawing for reference or example on another project requires the services of properly licensed architects and engineers. Reproduction of this drawing for reuse on another project is not authorized and may be contrary to the law.

Engineer:
HENDERSON ENGINEERS
8345 LENEXA DRIVE, SUITE 300
LENEXA, KS 66214
TEL 913.742.5000 FAX 913.742.5001
WWW.HENDERSONENGINEERS.COM
2050003713
FL. CORPORATE NO: EB 7606
EXPIRES 2/28/2021

Project Owner:
NIKE, Inc.
One Bowerman Drive
Beaverton, OR 97005
(503) 671-6453
www.nike.com

Project Address:
NIKE FACTORY STORE
WATERFORD LAKES SHOPPING CENTER
449 N. ALAFAYA TRAIL
ORLANDO, FL 32828
TEMPLATE ISSUE DATE: 11/28/2018

Fixture Package:
UNITE

Stamp:
THIS DOCUMENT IS RELEASED FOR THE PURPOSE OF PRELIMINARY SUBMITTAL BRADLEY E. CHAMBON LICENSE # 82784

IT IS NOT TO BE USED FOR CONSTRUCTION PURPOSES

BRADLEY E. CHAMBON
LICENSE # 82784

Issued For:
PERMIT/BID

Issue Date:
11/06/2020

Revisions:

NO.	REASON	DATE

PROJECT MANAGER: KH
CHECKED BY:
DRAWN BY: Author

Project Number:
62301411

Sheet Title:
PLUMBING SCHEDULES AND DETAILS

Sheet Number:
P3.0

SECTION 15B: PLUMBING:

15B GENERAL INSTRUCTIONS

15B GENERAL REQUIREMENTS

REQUIREMENTS UNDER DIVISION ONE AND THE GENERAL AND SUPPLEMENTARY CONDITIONS OF THESE SPECIFICATIONS SHALL BE A PART OF THIS SECTION. THE CONTRACTOR SHALL BE RESPONSIBLE TO BECOME THOROUGHLY ACQUAINTED WITH ITS CONTENTS AS TO REQUIREMENTS THAT AFFECT THIS DIVISION OR SECTION. WORK REQUIRED UNDER THIS SECTION INCLUDES MATERIAL, EQUIPMENT, APPLIANCES, TRANSPORTATION, SERVICES AND LABOR REQUIRED TO COMPLETE THE ENTIRE PLUMBING SYSTEM AS REQUIRED BY THE DRAWINGS AND SPECIFICATIONS.

THE SPECIFICATIONS AND THE DRAWINGS ARE COMPLEMENTARY, AND ANY PORTION OF WORK DESCRIBED IN ONE SHALL BE PROVIDED AS IF DESCRIBED IN BOTH. IN THE EVENT OF DISCREPANCIES ON THE DRAWINGS AND SPECIFICATIONS, THE CONTRACTOR SHALL NOTIFY THE ENGINEER OF SAME PRIOR TO PROCEEDING WITH THE WORK INVOLVED, IN ORDER THAT CORRECT PROGRESS OF THE WORK MAY BE PERFORMED.

15B DEFINITIONS

FURNISH: "TO SUPPLY AND DELIVER TO THE PROJECT SITE, READY FOR UNLOADING, UNPACKING, ASSEMBLY, INSTALLATION AND SIMILAR OPERATIONS."

INSTALL: "TO PERFORM ALL OPERATIONS AT THE PROJECT SITE INCLUDING, BUT NOT LIMITED TO, THE ACTUAL UNLOADING, UNPACKING, ASSEMBLING, ERECTING, PLACING, ANCHORING, APPLYING, WORKING TO DIMENSION, FINISHING, CURING, PROTECTING, CLEANING, TESTING, COMMISSIONING, STARTING UP AND SIMILAR OPERATIONS, COMPLETE, AND READY FOR THE INTENDED USE."

PROVIDE: "TO FURNISH AND INSTALL, COMPLETE AND READY FOR THE INTENDED USE."

FURNISHED BY OWNER OR FURNISHED BY OTHERS: "AN ITEM FURNISHED BY THE OWNER OR UNDER OTHER DIVISIONS OR CONTRACTS, AND INSTALLED UNDER THE REQUIREMENTS OF THIS DIVISION, COMPLETE, AND READY FOR THE INTENDED USE, INCLUDING ALL ITEMS AND SERVICES INCIDENTAL TO THE WORK NECESSARY FOR PROPER INSTALLATION AND OPERATION. INCLUDE THE INSTALLATION UNDER THE WARRANTY REQUIRED BY THIS DIVISION."

ENGINEER: WHERE REFERENCED IN THIS DIVISION, "ENGINEER" IS THE ENGINEER OF RECORD AND THE DESIGN PROFESSIONAL FOR THE WORK UNDER THIS DIVISION, AND IS A CONSULTANT TO, AND AN AUTHORIZED REPRESENTATIVE OF, THE ARCHITECT, AS DEFINED IN THE GENERAL AND/OR SUPPLEMENTARY CONDITIONS. WHEN USED IN THIS DIVISION, IT MEANS INCREASED INVOLVEMENT BY, AND OBLIGATIONS TO, THE ENGINEER, IN ADDITION TO INVOLVEMENT BY, AND OBLIGATIONS TO, THE "ARCHITECT".

AHJ: THE LOCAL CODE AND/OR INSPECTION AGENCY (AUTHORITY) HAVING JURISDICTION OVER THE WORK.

NRTL: NATIONALLY RECOGNIZED TESTING LABORATORY, AS DEFINED AND LISTED BY OSHA IN 29 CFR 1910.7 (E.G., UL, ETL, CSA), AND ACCEPTABLE TO THE AHJ OVER THIS PROJECT.

THE TERMS "APPROVED EQUAL", "EQUIVALENT", OR "EQUAL" ARE USED SYNONYMOUSLY AND SHALL MEAN "ACCEPTED BY OR ACCEPTABLE TO THE ENGINEER AS EQUIVALENT TO THE ITEM OR MANUFACTURER SPECIFIED". THE TERM "APPROVED" SHALL MEAN LABELED, LISTED, OR BOTH, BY AN NRTL, AND ACCEPTABLE TO THE AHJ OVER THIS PROJECT.

THE TERM LEAD FREE REFERS TO THE WETTED SURFACE OF PIPE, FITTINGS AND FIXTURES IN POTABLE WATER SYSTEMS THAT HAVE A WEIGHTED AVERAGE LEAD CONTENT OF LESS THAN OR EQUAL TO 0.25% PER SAFE DRINKING WATER ACT AS AMENDED JANUARY 4, 2011 SECTION 1417.

15B PREBID SITE VISIT

PRIOR TO SUBMITTING BID, VISIT THE SITE OF THE PROPOSED WORK AND BECOME FULLY INFORMED AS TO THE CONDITIONS UNDER WHICH THE WORK IS TO BE DONE. FAILURE TO DO SO WILL NOT BE CONSIDERED SUFFICIENT JUSTIFICATION TO REQUEST OR OBTAIN EXTRA COMPENSATION OVER AND ABOVE THE CONTRACT PRICE.

15B MATERIAL AND WORKMANSHIP

MATERIAL, EQUIPMENT, AND APPARATUS PROVIDED UNDER THIS CONTRACT SHALL BE NEW UNLESS OTHERWISE STATED HEREIN, OF BEST QUALITY NORMALLY USED FOR THE PURPOSE IN GOOD COMMERCIAL PRACTICE, AND FREE FROM DEFECTS. MODEL NUMBERS LISTED IN SPECIFICATIONS OR SHOWN ON THE DRAWINGS ARE NOT NECESSARILY INTENDED TO DESIGNATE THE REQUIRED TRIM, WRITTEN DESCRIPTIONS OF THE TRIM GOVERN MODEL NUMBERS.

PIPE, PIPE FITTINGS, PIPE SPECIALTIES AND VALVES SHALL BE MANUFACTURED IN PLANTS LOCATED IN THE UNITED STATES.

WORK PERFORMED UNDER THIS CONTRACT SHALL PROVIDE A NEAT AND "WORKMANLIKE" APPEARANCE WHEN COMPLETED, TO THE SATISFACTION OF THE ARCHITECT AND ENGINEER. WORKMANSHIP SHALL BE THE FINEST POSSIBLE BY EXPERIENCED MECHANICS. INSTALLATIONS SHALL BE MADE IN A MANNER THAT WILL COMPLY WITH APPLICABLE CODES AND LAWS.

INSTALLATION SHALL FUNCTION AS DESIGNED AND INTENDED WITH RESPECT TO EFFICIENCY, CAPACITY, AND NOISE LEVEL, ETC. ABNORMAL NOISE CAUSED BY RATTLING EQUIPMENT OR PIPING AND SQUEAKS IN ROTATING COMPONENTS WILL NOT BE ACCEPTABLE. MATERIALS AND EQUIPMENT SHALL BE OF COMMERCIAL SPECIFICATION GRADE IN QUALITY. LIGHT DUTY AND RESIDENTIAL GRADE EQUIPMENT WILL NOT BE ACCEPTED UNLESS OTHERWISE INDICATED.

REMOVE FROM THE PREMISES WASTE MATERIAL PRESENT AS A RESULT OF HIS WORK, INCLUDING CARTONS, CRATING, PAPER, STICKERS, AND/OR EXCAVATION MATERIAL NOT USED IN BACKFILLING, ETC. CLEAN PIECES OF EQUIPMENT INSTALLED UNDER THIS CONTRACT TO PRESENT A NEAT AND CLEAN INSTALLATION AT THE TERMINATION OF THE WORK.

REPAIR OR REPLACE PUBLIC AND PRIVATE PROPERTY DAMAGED AS A RESULT OF WORK PERFORMED UNDER THIS CONTRACT TO THE SATISFACTION OF AUTHORITIES AND REGULATIONS HAVING JURISDICTION.

15B COORDINATION

COORDINATE WORK WITH THAT OF OTHER TRADES SO THAT THE VARIOUS COMPONENTS OF THE SYSTEMS WILL BE INSTALLED AT THE PROPER TIME, WILL FIT THE AVAILABLE SPACE, AND WILL ALLOW PROPER SERVICE ACCESS TO THOSE ITEMS REQUIRING MAINTENANCE. COMPONENTS WHICH ARE INSTALLED WITHOUT REGARD TO THE ABOVE SHALL BE RELOCATED AT NO ADDITIONAL COST TO THE OWNER.

UNLESS NOTED ELSEWHERE, GENERAL CONTRACTOR WILL PROVIDE CHASES AND OPENINGS IN BUILDING CONSTRUCTION REQUIRED FOR INSTALLATION OF THE SYSTEMS SPECIFIED HEREIN. CONTRACTOR SHALL FURNISH THE GENERAL CONTRACTOR WITH INFORMATION REGARDING CHASES AND OPENINGS WHEN REQUIRED. CONTRACTOR SHALL KEEP INFORMED AS TO THE WORK OF OTHER TRADES ENGAGED IN THE CONSTRUCTION OF THE PROJECT, AND SHALL EXECUTE HIS WORK IN SUCH A MANNER AS NOT TO INTERFERE WITH OR DELAY THE WORK OF OTHER TRADES.

FIGURED DIMENSIONS SHALL BE TAKEN IN PREFERENCE TO SCALED DIMENSIONS. CONTRACTOR SHALL TAKE HIS OWN MEASUREMENTS AT THE BUILDING, AS VARIATIONS MAY OCCUR. CONTRACTOR WILL BE HELD RESPONSIBLE FOR ERRORS WHICH COULD HAVE BEEN AVOIDED BY PROPER CHECKING AND VERIFICATION.

PROVIDE MATERIALS WITH TRIM THAT WILL PROPERLY FIT THE TYPES OF CEILING, WALL, OR FLOOR FINISHES ACTUALLY INSTALLED. MODEL NUMBERS LISTED IN THE SPECIFICATIONS OR SHOWN ON THE DRAWINGS ARE NOT INTENDED TO DESIGNATE THE REQUIRED TRIM.

15B ORDINANCES AND CODES

WORK PERFORMED UNDER THIS CONTRACT SHALL, AT A MINIMUM, BE IN CONFORMANCE WITH APPLICABLE NATIONAL, STATE AND LOCAL CODES HAVING JURISDICTION. EQUIPMENT FURNISHED AND ASSOCIATED INSTALLATION WORK PERFORMED UNDER THIS CONTRACT SHALL BE IN STRICT COMPLIANCE WITH CURRENT APPLICABLE CODES ADOPTED BY THE LOCAL AHJ INCLUDING ANY AMENDMENTS AND STANDARDS AS SET FORTH BY THE NATIONAL FIRE PROTECTION ASSOCIATION (NFPA), UNDERWRITERS LABORATORIES (UL), OCCUPATIONAL SAFETY AND HEALTH ADMINISTRATION (OSHA), AMERICAN SOCIETY OF MECHANICAL ENGINEERS (ASME), AMERICAN SOCIETY OF HEATING, REFRIGERATION, AND AIR CONDITIONING ENGINEERS (ASHRAE), AMERICAN NATIONAL STANDARDS INSTITUTE (ANSI), AMERICAN SOCIETY OF TESTING MATERIALS (ASTM) AND OTHER NATIONAL STANDARDS AND CODES WHERE APPLICABLE. WHERE THE CONTRACT DOCUMENTS EXCEED THE REQUIREMENTS OF THE REFERENCED CODES, STANDARDS, ETC., THE CONTRACT DOCUMENTS SHALL TAKE PRECEDENCE.

PROCURE AND PAY FOR PERMITS AND LICENSES REQUIRED FOR THE ACCOMPLISHMENT OF THE WORK HEREIN DESCRIBED. WHERE REQUIRED, OBTAIN, PAY FOR AND FURNISH CERTIFICATES OF INSPECTION TO OWNER. THE CONTRACTOR WILL BE HELD RESPONSIBLE FOR ANY VIOLATION OF THE LAW. MAINTAIN NECESSARY SIGNAL LIGHTS AND GUARDS FOR THE SAFETY OF THE PUBLIC.

15B PROTECTION OF EQUIPMENT AND MATERIAL

STORE AND PROTECT FROM DAMAGE EQUIPMENT AND MATERIAL AFTER DELIVERY TO JOB SITE. COVER WITH WATERPROOF, TEAR-RESISTANT, HEAVY TARP OR POLYETHYLENE PLASTIC AS REQUIRED TO PROTECT FROM PLASTER, DIRT, PAINT, WATER, OR PHYSICAL DAMAGE. EQUIPMENT AND MATERIAL DAMAGED BY CONSTRUCTION ACTIVITIES WILL BE REJECTED, AND CONTRACTOR IS OBLIGATED TO FURNISH NEW EQUIPMENT AND MATERIAL OF A LIKE KIND AT HIS OWN EXPENSE.

KEEP PREMISES BROOM CLEAN OF FOREIGN MATERIAL CREATED UNDER THIS CONTRACT. PIPING, EQUIPMENT, ETC. SHALL HAVE A NEAT AND CLEAN APPEARANCE AT THE TERMINATION OF THE WORK.

PLUG OR CAP OPEN ENDS OF PIPING SYSTEMS DURING CONSTRUCTION WHEN NOT IN USE, TO PREVENT THE ENTRANCE OF DEBRIS INTO THE SYSTEMS.

KEEP THE MANUFACTURER-PROVIDED PROTECTIVE COVERINGS ON FLOOR DRAINS, FLOOR SINKS AND TRENCH DRAINS DURING CONSTRUCTION. REMOVE COVERINGS AT THE TERMINATION OF THE WORK AND POLISH EXPOSED SURFACES.

15B SUBSTITUTIONS

THE BASE BID SHALL INCLUDE ONLY THE PRODUCTS FROM MANUFACTURERS SPECIFICALLY NAMED IN THE DRAWINGS AND SPECIFICATIONS. NO SUBSTITUTION WILL BE CONSIDERED PRIOR TO RECEIPT OF BIDS UNLESS WRITTEN REQUEST FOR APPROVAL TO BID HAS BEEN RECEIVED BY THE ENGINEER AT LEAST TEN CALENDAR DAYS PRIOR TO THE DATE FOR RECEIPT OF BIDS. EACH SUCH REQUEST SHALL INCLUDE THE NAME OF THE MATERIAL OR EQUIPMENT FOR WHICH IT IS TO BE SUBSTITUTED AND A COMPLETE DESCRIPTION OF THE PROPOSED SUBSTITUTE INCLUDING DRAWINGS, CUTS, PERFORMANCE AND TEST DATA AND OTHER INFORMATION NECESSARY FOR AN EVALUATION. A STATEMENT SETTING FORTH CHANGES IN OTHER MATERIALS, EQUIPMENT OR OTHER WORK THAT INCORPORATION OF THE SUBSTITUTE WOULD REQUIRE SHALL BE INCLUDED. THE BURDEN OF PROOF OF THE MERIT OF THE PROPOSED SUBSTITUTE IS UPON THE PROPOSER. THE ENGINEER'S DECISION OF APPROVAL OR DISAPPROVAL TO BID OF A PROPOSED SUBSTITUTION SHALL BE FINAL.

THE TERMS "APPROVED", "APPROVED EQUAL", OR "EQUAL", REFER TO APPROVAL BY THE ENGINEER AS AN ACCEPTABLE ALTERNATE BID. NO SUBSTITUTIONS WILL BE CONSIDERED THAT ARE NOT BID AS AN ALTERNATE. NO MATERIAL SUBSTITUTIONS SHALL BE CONSIDERED FOR APPROVAL PRIOR TO AWARD OF CONTRACT.

COORDINATE AND VERIFY WITH OTHER TRADES WHETHER OR NOT THE SUBSTITUTED EQUIPMENT CAN BE INSTALLED AS SHOWN ON THE CONSTRUCTION DRAWINGS WITHOUT MODIFICATION TO ASSOCIATED SYSTEMS OR ARCHITECTURAL OR ENGINEERING DESIGN. INCLUDE ADDITIONAL COSTS FOR ARCHITECTURAL AND ENGINEERING DESIGN FEES IN BID IF DRAWING MODIFICATIONS ARE REQUIRED BECAUSE OF SUBSTITUTED EQUIPMENT.

15B SHOP DRAWINGS

UPON BEING AWARDED A CONTRACT, SUBMIT TO THE ARCHITECT FOR APPROVAL, SIX (6) COPIES OF MANUFACTURER'S SHOP DRAWINGS FOR EQUIPMENT TO BE FURNISHED UNDER THIS CONTRACT, ITEMS REQUIRING COORDINATION BETWEEN CONTRACTORS AND SHEET METAL DUCTWORK FABRICATION DRAWINGS. BEFORE SUBMITTING SHOP DRAWINGS AND MATERIAL LISTS, VERIFY THAT EQUIPMENT SUBMITTED IS MUTUALLY COMPATIBLE AND SUITABLE FOR THE INTENDED USE, AND WILL FIT THE AVAILABLE SPACE AND ALLOW AMPLE ROOM FOR MAINTENANCE. HIGHLIGHT, MARK, LIST OR INDICATE THE MATERIALS, PERFORMANCE CRITERIA AND ACCESSORIES THAT ARE BEING PROPOSED. SUBMIT SHOP DRAWINGS AS EARLY AS REQUIRED TO SUPPORT THE PROJECT SCHEDULE. ALLOW FOR TWO WEEKS ENGINEER REVIEW TIME PLUS MAILING TIME PLUS A DUPLICATION OF THIS TIME FOR RESUBMITTAL IF REQUIRED.

SUBMITTALS AND SHOP DRAWINGS SHALL NOT CONTAIN HEI'S FIRM NAME OR LOGO, NOR SHALL IT CONTAIN THE HEI'S ENGINEERS' SEAL AND SIGNATURE. THEY SHALL NOT BE COPIES OF HEI'S WORK PRODUCT. IF THE CONTRACTOR DESIRES TO USE ELEMENTS OF SUCH PRODUCT, REFER TO PARAGRAPH "ELECTRONIC DRAWING FILES" FOR PROCEDURES TO BE USED.

THE ENGINEER'S CHECKING AND SUBSEQUENT APPROVAL OF SUCH SHOP DRAWINGS WILL NOT RELIEVE THE CONTRACTOR FROM RESPONSIBILITY FOR ERRORS IN DIMENSIONS, DETAILS, SIZE OF MEMBERS, QUANTITIES, OMISSIONS OF COMPONENTS OR FITTINGS; COORDINATION OF ELECTRICAL REQUIREMENTS; OR FOR COORDINATING ITEMS WITH ACTUAL BUILDING CONDITIONS. PROCEED WITH THE PROCUREMENT AND INSTALLATION OF EQUIPMENT ONLY AFTER RECEIVING APPROVED SHOP DRAWINGS RELATIVE TO EACH ITEM.

CATALOG DATA SHALL BE PROPERLY BOUND, IDENTIFIED, INDEXED AND TABBED IN A 3-RING BINDER. EACH ITEM OR MODEL NUMBER SHALL BE CLEARLY MARKED AND ACCESSORIES INDICATED. LABEL THE CATALOG DATA WITH THE EQUIPMENT IDENTIFICATION ACRONYM OR NUMBER AS USED ON THE DRAWINGS AND INCLUDE PERFORMANCE CURVES, CAPACITIES, SIZES, WEIGHTS, MATERIALS, FINISHES, WIRING DIAGRAMS, ELECTRICAL REQUIREMENTS AND DEVIATIONS FROM SPECIFIED EQUIPMENT OR MATERIALS. FOR EQUIPMENT WITH STARTERS OR VFDS, INCLUDE SHORT CIRCUIT CURRENT RATINGS. MARK OUT INAPPLICABLE ITEMS. SHOP DRAWINGS WILL BE RETURNED WITHOUT REVIEW IF THE ABOVE MENTIONED REQUIREMENTS ARE NOT MET.

15B ELECTRONIC DRAWINGS

IN PREPARATION OF SHOP DRAWINGS OR RECORD DRAWINGS, CONTRACTOR MAY, AT HIS OPTION, OBTAIN ELECTRONIC DRAWING FILES IN AUTOCAD OR DXF FORMAT ON CD-ROM DISK, DVD DISK, FLASH DRIVE OR DIRECT DOWNLOAD, AS DESIRED, FROM THE ENGINEER FOR A SHIPPING AND HANDLING FEE OF $200 FOR A DRAWING SET UP TO 12 SHEETS AND $15 PER SHEET FOR EACH ADDITIONAL SHEET. CONTRACTOR SHALL CONTACT THE ARCHITECT FOR WRITTEN AUTHORIZATION AND ENGINEER FOR THE NECESSARY RELEASE AGREEMENT FORM AND TO SPECIFY SHIPPING METHOD AND DRAWING FORMAT. IN ADDITION TO PAYMENT, ARCHITECT'S WRITTEN AUTHORIZATION AND ENGINEER'S RELEASE AGREEMENT FORM MUST BE RECEIVED BEFORE ELECTRONIC DRAWING FILES WILL BE SENT.

15B OPERATION AND MAINTENANCE INSTRUCTIONS

DURING THE COURSE OF CONSTRUCTION, COLLECT AND COMPILE A COMPLETE BROCHURE OF EQUIPMENT FURNISHED AND INSTALLED ON THIS PROJECT. INCLUDE OPERATIONAL AND MAINTENANCE INSTRUCTIONS, MANUFACTURER'S CATALOG SHEETS, WIRING DIAGRAMS, PARTS LISTS, APPROVED SHOP DRAWINGS, AND DESCRIPTIVE LITERATURE AS FURNISHED BY THE EQUIPMENT MANUFACTURER. INCLUDE AN INSIDE COVER SHEET THAT LISTS THE PROJECT NAME, DATE, OWNER, ARCHITECT, CONSULTING ENGINEER, GENERAL CONTRACTOR, SUB-CONTRACTOR, AND AN INDEX OF CONTENTS.

SUBMIT THREE COPIES OF LITERATURE BOUND IN APPROVED BINDERS TO THE ARCHITECT AT THE TERMINATION OF THE WORK. PAPER CLIPS, STAPLES, RUBBER BANDS, AND MAILING ENVELOPES ARE NOT CONSIDERED APPROVED BINDERS. FINAL APPROVAL OF MECHANICAL SYSTEMS INSTALLED UNDER THIS CONTRACT WILL BE WITHHELD UNTIL THIS EQUIPMENT BROCHURE IS RECEIVED AND DEEMED COMPLETE BY THE ARCHITECT AND ENGINEER. INSTRUCT WORKMEN TO SAVE REQUIRED LITERATURE SHIPPED WITH THE EQUIPMENT ITSELF, FOR INCLUSION IN THIS BROCHURE.

PROVIDE "AS-BUILT" DRAWINGS (SEE SPECIAL CONDITIONS).

15B TRAINING

AT A TIME MUTUALLY AGREED UPON BETWEEN THE OWNER AND CONTRACTOR, PROVIDE THE SERVICES OF A FACTORY TRAINED AND AUTHORIZED REPRESENTATIVE TO TRAIN OWNER'S DESIGNATED PERSONNEL ON THE OPERATION AND MAINTENANCE OF THE EQUIPMENT PROVIDED FOR THIS PROJECT.

PROVIDE TRAINING TO INCLUDE BUT NOT BE LIMITED TO AN OVERVIEW OF THE SYSTEM AND/OR EQUIPMENT AS IT RELATES TO THE FACILITY AS A WHOLE; OPERATION AND MAINTENANCE PROCEDURES AND SCHEDULES RELATED TO STARTUP AND SHUTDOWN, TROUBLESHOOTING, SERVICING, PREVENTIVE MAINTENANCE AND APPROPRIATE OPERATOR INTERVENTION; AND REVIEW OF DATA INCLUDED IN THE OPERATION AND MAINTENANCE MANUALS.

SUBMIT A CERTIFICATION LETTER TO THE ARCHITECT STATING THAT THE OWNER'S DESIGNATED REPRESENTATIVE HAS BEEN TRAINED AS SPECIFIED HEREIN. LETTER SHALL INCLUDE DATE, TIME, ATTENDEES AND SUBJECT OF TRAINING. THE CONTRACTOR AND THE OWNER'S REPRESENTATIVE SHALL SIGN THE CERTIFICATION LETTER INDICATING AGREEMENT THAT THE TRAINING HAS BEEN PROVIDED.

SCHEDULE TRAINING WITH OWNER WITH AT LEAST 7 DAYS' ADVANCE NOTICE.

15B WARRANTIES

COORDINATE WITH DIVISION 1 AND GENERAL CONDITIONS TO DETERMINE WHAT THE ACTUAL REQUIREMENTS ARE, AND MODIFY THE FOLLOWING AS REQUIRED SO AS TO NOT CONTRADICT THEM.

WARRANT EACH SYSTEM AND EACH ELEMENT THEREOF AGAINST ALL DEFECTS DUE TO FAULTY WORKMANSHIP, DESIGN OR MATERIAL FOR A PERIOD OF 12 MONTHS FROM DATE OF SUBSTANTIAL COMPLETION, UNLESS SPECIFIC ITEMS ARE NOTED TO CARRY A LONGER WARRANTY IN THE CONSTRUCTION DOCUMENTS OR MANUFACTURER'S STANDARD WARRANTY EXCEEDS 12 MONTHS. REMEDY ALL DEFECTS, OCCURRING WITHIN THE WARRANTY PERIOD(S), AS STATED IN THE GENERAL CONDITIONS AND DIVISION 1.

WARRANTIES SHALL INCLUDE LABOR AND MATERIAL. MAKE REPAIRS OR REPLACEMENTS WITHOUT ANY ADDITIONAL COSTS TO THE OWNER.

PERFORM THE REMEDIAL WORK PROMPTLY, UPON WRITTEN NOTICE FROM THE ENGINEER OR OWNER.

AT THE TIME OF SUBSTANTIAL COMPLETION, DELIVER TO THE OWNER ALL WARRANTIES, IN WRITING AND PROPERLY EXECUTED, INCLUDING TERM LIMITS FOR WARRANTIES EXTENDING BEYOND THE ONE YEAR PERIOD, EACH WARRANTY INSTRUMENT BEING ADDRESSED TO THE OWNER AND STATING THE COMMENCEMENT DATE AND TERM.

15B SPARE PARTS

FURNISH TO OWNER, WITH RECEIPT, THE SPARE PARTS TO INCLUDE FAUCET WASHERS AND O-RINGS, FLUSHOMETER REPAIR KITS AND WATER CLOSET TANK REPAIR KITS FOR THE FIXTURES FURNISHED FOR THIS PROJECT.

15B EXCAVATION AND BACKFILLING

PERFORM EXCAVATION AND BACKFILL REQUIRED FOR INSTALLATION OF UNDERGROUND WORK UNDER THIS CONTRACT. TRENCHES SHALL BE OF SUFFICIENT WIDTH. CRIB OR BRACE TRENCHES TO PREVENT CAVE-IN OR SETTLEMENT. DO NOT EXCAVATE TRENCHES CLOSE TO COLUMNS AND WALLS OF NEW BUILDING WITHOUT PRIOR CONSULTATION WITH THE ARCHITECT. USE PUMPING EQUIPMENT IF REQUIRED TO KEEP TRENCHES FREE OF WATER. BACKFILL TRENCHES IN MAXIMUM 6" LAYERS OF WELL-TAMPED DRY EARTH IN A MANNER TO PREVENT FUTURE SETTLEMENT.

EXCAVATION AS HEREIN SPECIFIED SHALL BE CLASSIFIED AS COMMON EXCAVATION. COMMON EXCAVATION SHALL COMPRISE THE SATISFACTORY REMOVAL AND DISPOSITION OF MATERIAL OF WHATEVER SUBSTANCES AND OF EVERY DESCRIPTION ENCOUNTERED, INCLUDING ROCK, IF ANY, WITHIN THE LIMITS OF THE WORK AS SPECIFIED AND SHOWN ON THE DRAWINGS. EXCAVATION SHALL BE PERFORMED TO THE LINES AND GRADES INDICATED ON THE DRAWINGS. EXCAVATED MATERIALS WHICH ARE CONSIDERED UNSUITABLE FOR BACKFILL, AND SURPLUS OF EXCAVATED MATERIAL WHICH IS NOT REQUIRED FOR BACKFILL, SHALL BE DISPOSED OF BY THE CONTRACTOR AT HIS OWN EXPENSE AND RESPONSIBILITY, AND TO THE SATISFACTION OF THE ARCHITECT.

15B COINCIDENTAL DAMAGE

CONTRACTOR SHALL REPAIR STREETS, SIDEWALKS, DRIVES, PAVING, WALLS AND FINISHES ETC. THAT HE DAMAGES IN THE COURSE OF THIS PROJECT. REPAIR MATERIALS SHALL MATCH EXISTING CONSTRUCTION. REPAIR WORK SHALL MEET REQUIREMENTS OF THE LOCAL AUTHORITIES HAVING JURISDICTION AND MEET THE SATISFACTION OF THE ARCHITECT.

15B CUTTING AND PATCHING

OBTAIN PERMISSION FROM THE ARCHITECT BEFORE CUTTING WALLS, FLOORS, CEILINGS, ETC. AS REQUIRED BY THE PROJECT. DO NOT DISTURB STRUCTURAL MEMBERS WITHOUT PRIOR APPROVAL FROM THE ARCHITECT. CUT HOLES AS SMALL AS POSSIBLE. GENERAL CONTRACTOR SHALL PATCH WALLS, FLOORS, ETC. AS REQUIRED BY WORK UNDER THIS SECTION. PATCHING SHALL MATCH ORIGINAL MATERIAL AND CONSTRUCTION. REPAIR AND REFINISH AREAS DISTURBED BY WORK TO THE CONDITION OF ADJOINING SURFACES IN A MANNER SATISFACTORY TO THE ARCHITECT.

15B ROUGH-IN

BEFORE STARTING CONSTRUCTION, COORDINATE WITH OTHER CONTRACTORS REGARDING ROUGH-IN WITH GENERAL CONSTRUCTION. CONCEAL PIPING, CONDUIT AND ROUGH-IN EXCEPT IN UNFINISHED AREAS AND WHERE OTHERWISE SHOWN.

15B STRUCTURAL STEEL

STRUCTURAL STEEL USED FOR PIPE SUPPORTS, EQUIPMENT SUPPORTS, ETC., SHALL BE NEW AND CLEAN, AND SHALL CONFORM TO ASTM DESIGNATION A-36.

SUPPORT PLUMBING EQUIPMENT AND PIPING FROM THE BUILDING STRUCTURE. DO NOT SUPPORT PLUMBING EQUIPMENT AND PIPING FROM CEILINGS, OTHER MECHANICAL OR ELECTRICAL COMPONENTS, AND OTHER NON-STRUCTURAL ELEMENTS.

15B ACCESS DOORS

PROVIDE ACCESS DOORS IN CEILINGS AND WALLS WHERE INDICATED OR REQUIRED FOR ACCESS TO CONCEALED VALVES AND EQUIPMENT INSTALLED UNDER THIS SECTION. PROVIDE CONCEALED HINGES, SCREWDRIVER-TYPE LOCK, ANCHOR STRAPS; MANUFACTURED BY MILCOR, ZURN, TITUS, OR EQUAL. OBTAIN ARCHITECT'S APPROVAL OF TYPE, SIZE, LOCATION, AND COLOR BEFORE ORDERING.

15B PENETRATIONS

SEAL ELEVATED FLOOR, EXTERIOR WALL AND ROOF PENETRATIONS WATERTIGHT AND WEATHERTIGHT WITH NON-SHRINK, NON-HARDENING COMMERCIAL SEALANT. PACK WITH MINERAL WOOL AND SEAL BOTH ENDS WITH MINIMUM OF 1/2" OF SEALANT.

SEAL AROUND PENETRATIONS OF FIRE RATED ASSEMBLIES. COORDINATE FIRE RATINGS AND LOCATIONS WITH THE ARCHITECTURAL DRAWINGS. REFER TO ARCHITECTURAL SPECIFICATIONS FOR FIRE STOPPINGS. PROVIDE A PRODUCT SCHEDULE FOR UL LISTING, LOCATION, WALL OR FLOOR RATING AND INSTALLATION DRAWING FOR EACH PENETRATION FIRE STOP SYSTEM.

EXTEND PIPE INSULATION FOR INSULATED PIPE THROUGH FLOOR, WALL AND ROOF PENETRATIONS, INCLUDING FIRE RATED WALLS AND FLOORS. THE VAPOR BARRIER SHALL BE MAINTAINED. SIZE SLEEVE FOR A MINIMUM OF 1" ANNULAR CLEAR SPACE BETWEEN INSIDE OF SLEEVE AND OUTSIDE OF INSULATION.

15B ELECTRICAL WIRING

LINE VOLTAGE WIRING SHALL BE PROVIDED BY DIVISION 16. LINE VOLTAGE CONTROL AND INTERLOCK WIRING FOR PLUMBING SYSTEMS SHALL ALSO BE PROVIDED BY DIVISION 16 CONTRACTOR. LOW VOLTAGE CONTROL WIRING SHALL BE PROVIDED BY THE DIVISION 15 CONTRACTOR. FURNISH WIRING DIAGRAMS TO THE DIVISION 16 CONTRACTOR AS REQUIRED FOR PROPER EQUIPMENT HOOKUP. COORDINATE WITH THE DIVISION 16 CONTRACTOR THE ACTUAL WIRE SIZING AMPS FOR PLUMBING EQUIPMENT (FROM THE EQUIPMENT NAMEPLATE) TO ENSURE PROPER INSTALLATION.

15B MISCELLANEOUS REMODELING WORK

PROVIDE ITEMS OF PLUMBING SYSTEMS MODIFICATION REQUIRED BECAUSE OF BUILDING REMODELING, AS NOTED ON THE DRAWINGS, OR NECESSARY FOR PROPER OPERATION. MATCH EXISTING MATERIALS AND CONSTRUCTION TECHNIQUES WHEN MODIFYING EXISTING SYSTEMS. COORDINATE REQUIREMENTS WITH GENERAL CONTRACTOR AND ARCHITECT.

EXISTING FLOOR DRAINS REQUIRED TO BE ABANDONED OR NOT IN USE AT THE TERMINATION OF THE WORK SHALL BE SEALED GAS-TIGHT. CLEAN TRAP OF DEBRIS AND FILL WITH SILICONE. REMOVE GRATE AND FILL DRAIN BODY WITH GROUT. IN THE FINISHED PORTIONS OF THE BUILDING THEY SHALL BE COVERED WITH FLOOR MATERIAL MATCHING ADJACENT AREA. ANY FLOOR DEPRESSIONS RESULTING FROM ABANDONED FLOOR DRAINS SHALL BE LEVELED BEFORE FINAL FLOOR FINISHING.

NEW FLOOR DRAINS SHALL BE CONNECTED TO THE EXISTING SANITARY DRAINAGE SYSTEM AS SHOWN ON THE DRAWINGS OR AS REQUIRED. SAW-CUT EXISTING CONCRETE FLOOR AS REQUIRED TO INSTALL NEW UNDERFLOOR LINES, AND PATCH TO MATCH EXISTING SUB-FLOOR. REFER TO ARCHITECTURAL SPECIFICATIONS FOR FINISH FLOOR PATCHING REQUIREMENTS.

EXISTING PLUMBING FIXTURES WHERE INDICATED ON THE DRAWINGS TO BE REUSED SHALL BE CLEANED, REPAIRED, PROVIDED WITH NEW WASHERS, ETC. AS REQUIRED TO PUT THEM INTO GOOD OPERATING CONDITION.

PATCH HOLES WEATHER-TIGHT IN EXISTING ROOFS CAUSED BY REMOVAL OF PLUMBING ITEMS SUCH AS PIPING.

MAKE CONNECTION OF NEW PIPE TO SIMILAR EXISTING WASTE, WATER AND GAS PIPE USING STANDARD FITTINGS AND JOINING PRACTICES.

15B BUILDING OPERATION

COMPLY WITH THE SCHEDULE OF OPERATIONS AS OUTLINED IN THE ARCHITECTURAL PORTIONS OF THIS SPECIFICATION. BUILDING WILL BE IN OPERATION DURING NORMAL WORK-DAY HOURS. ACCOMPLISH WORK REQUIRING INTERRUPTION OF BUILDING OPERATION AT A TIME WHEN THE BUILDING IS NOT IN OPERATION, AND ONLY WITH WRITTEN APPROVAL OF BUILDING OWNER AND/OR TENANT. COORDINATE INTERRUPTION OF BUILDING OPERATION WITH THE OWNER AND/OR TENANT A MINIMUM OF SEVEN DAYS IN ADVANCE OF WORK.

15B SYSTEM TESTING AND ADJUSTING

UPON COMPLETION OF EACH PHASE OF THE INSTALLATION, TEST EACH SYSTEM IN CONFORMANCE WITH LOCAL CODE REQUIREMENTS AND AS NOTED BELOW. FURNISH LABOR AND EQUIPMENT REQUIRED TO TEST PLUMBING WORK INSTALLED UNDER THIS CONTRACT, AND ASSUME COSTS INVOLVED IN MAKING THE TESTS, AND REPAIRING AND/OR REPLACING DAMAGE RESULTING THEREFROM.

NOTIFY THE ARCHITECT AND THE AUTHORITY HAVING JURISDICTION, THREE (3) WORKING DAYS PRIOR TO MAKING PLUMBING SYSTEM TESTS. LEAVE CONCEALED WORK UNCOVERED UNTIL THE REQUIRED TESTS HAVE BEEN COMPLETED, BUT IF NECESSARY DUE TO CONSTRUCTION PROCEDURE, TESTS ON PORTIONS OF THE WORK MAY BE MADE, AND WHEN SATISFACTORY, THE WORK MAY BE CONCEALED. TEST PIPING BEFORE INSULATION IS INSTALLED, AND BEFORE BACKFILL. PIPES, JOINTS, FLANGES, VALVE STEMS, ETC., SHALL BE LEAK TIGHT. REPAIR OR REPLACE SYSTEM DEFECTS WITH NEW MATERIALS. CAULKING OF DEFECTIVE JOINTS, CRACKS OR HOLES WILL NOT BE PERMITTED. REPEAT TESTS AFTER DEFECTS HAVE BEEN ELIMINATED. MAKE TESTS IN THE PRESENCE OF THE ADMINISTRATIVE AUTHORITY AND/OR THE OWNER'S AUTHORIZED REPRESENTATIVE.

UPON COMPLETION OF THE SYSTEMS INSTALLATION, AND PRIOR TO ACCEPTANCE BY THE ARCHITECT AND ENGINEER, MAKE GENERAL OPERATING TESTS TO DEMONSTRATE THAT EQUIPMENT AND SYSTEMS ARE IN PROPER WORKING ORDER, AND ARE FUNCTIONING IN CONFORMANCE WITH THE INTENT OF THE DRAWINGS AND SPECIFICATIONS. AS A PART OF THESE TESTS, OPEN EVERY WATER OUTLET TO ENSURE COMPLETE SYSTEM FLUSHING, REMOVE AND CLEAN FAUCET AERATORS, CLEAN STRAINERS, LIGHT PILOT LIGHTS, AND OPERATE EVERY PIECE OF EQUIPMENT FURNISHED UNDER THIS CONTRACT TO DEMONSTRATE PROPER FUNCTIONING.

TEST THE DRAINAGE AND VENT SYSTEM BY PLUGGING OPENINGS WITH TEST PLUGS, EXCEPT THOSE AT THE TOP OF THE STACKS. FILL THE SYSTEM WITH WATER; TEST RESULTS WILL BE SATISFACTORY IF THE WATER LEVEL REMAINS STATIONARY FOR NOT LESS THAN ONE (1) HOUR. SUBJECT THE DRAINAGE AND VENT SYSTEM TO A PRESSURE OF AT LEAST TEN (10) FEET OF WATER. IF LEAKS DEVELOP, REPAIR THEM AND REPEAT THE TEST.

TEST THE DOMESTIC WATER SYSTEM BY FILLING IT WITH WATER AND THEN ISOLATING THE SYSTEM FROM ITS SOURCE. KEEP THE SYSTEM CLOSED FOR A PERIOD OF TWENTY-FOUR HOURS, WITH NO FIXTURE BEING USED. THE PRESSURE DIFFERENTIAL FOR THIS TEST PERIOD SHALL NOT EXCEED 10 PSIG. TEST WATER PIPING TO A 125 PSI HYDROSTATIC PRESSURE.

15B GUARANTEE

THE WORK TO BE PERFORMED UNDER THIS CONTRACT SHALL INCLUDE THE FURNISHING, INSTALLATION, AND CONNECTION OF PLUMBING SYSTEMS INDICATED ON THE DRAWINGS AND IN THE SPECIFICATIONS. BY SIGNING THE CONTRACT, THE CONTRACTOR ACKNOWLEDGES THAT HE HAS ACQUAINTED HIMSELF WITH THE SITE AND THE EXISTING CONDITIONS UNDER WHICH THE WORK IS TO BE PERFORMED, AND THE DRAWINGS AND SPECIFICATIONS PERTAINING THERETO, AND HE INDICATES THAT HE WILL COMPLY WITH THE REQUIREMENTS AND INTENT OF PERTINENT DOCUMENTS IN THE PERFORMANCE OF THE WORK.

GUARANTEE THAT THE PLUMBING INSTALLED UNDER THIS CONTRACT IS FREE OF DEFECTS IN WORKMANSHIP AND MATERIALS FOR A PERIOD OF ONE (1) YEAR FROM THE DATE OF JOB ACCEPTANCE BY THE OWNER. THIS SHALL INCLUDE A GUARANTEE OF FREE CIRCULATION OF LIQUIDS THROUGHOUT THE SYSTEM AS INTENDED WITHOUT LEAKS, EXCESSIVE NOISE, OR WATER HAMMER.

IF DEFECTS OCCUR DURING THE ONE YEAR GUARANTEE PERIOD, REPAIR OR REPLACE SUCH DEFECTS AT NO EXPENSE TO THE OWNER, AND TO THE SATISFACTION OF THE OWNER, ARCHITECT AND ENGINEER.

15B PLUMBING PIPING

15B PIPING MATERIALS

MATERIALS SPECIFIED OR NOTED ON THE DRAWINGS ARE SUBJECT TO THE APPROVAL OF LOCAL CODE AUTHORITIES. VERIFY APPROVAL BEFORE INSTALLING ANY MATERIAL OR JOINING METHOD.

DOMESTIC WATER (COLD, HOT AND HOT WATER RECIRCULATION): DOMESTIC WATER PIPING INSTALLED ABOVE THE FLOOR SLAB INSIDE THE BUILDING SHALL BE TYPE "L" HARD TEMPER COPPER TUBE WITH WROUGHT COPPER FITTINGS AND SOLDERED CONNECTIONS MADE UP WITH 95/5 SOLDER. BRAZED MECHANICALLY FORMED TEE CONNECTIONS (T-DRILL) MAY BE USED IN COPPER LINES WHERE APPROVED BY CODE; CONNECTION SHALL BE MADE WITH BRAZED SILVER SOLDER (SILFOS) JOINTS IN CONFORMANCE WITH MANUFACTURER'S INSTRUCTIONS.

UNDERGROUND DOMESTIC WATER PIPING 2" AND SMALLER SHALL BE TYPE "K" SOFT TEMPER COPPER TUBING WITH FLARED COPPER ALLOY FITTINGS AND CONNECTIONS, OR TYPE "K" HARD TEMPER COPPER TUBING WITH CONVENTIONAL WROUGHT COPPER FITTINGS AND SILVER SOLDER (SILFOS) JOINTS. INSTALL AS FEW UNDERGROUND COPPER PIPING JOINTS AS POSSIBLE. AT BUILDING SERVICE ENTRANCE, NO JOINTS SHALL BE INSTALLED UNDER OR WITHIN 5 FEET OF THE BUILDING. INSTALL DOMESTIC WATER PIPING BELOW GRADE OUTSIDE BUILDING AT ADEQUATE DEPTH TO PREVENT FREEZING.

INTERIOR WASTE AND VENT BELOW SLAB: WASTE AND VENT PIPE BELOW SLAB INSIDE BUILDING SHALL BE SERVICE WEIGHT CAST IRON SOIL PIPE WITH HUB AND SPIGOT FITTINGS WITH NEOPRENE GASKET JOINTS, MEETING ASTM A74, MANUFACTURED BY AB & I FOUNDRY, CHARLOTTE OR TYLER PIPE AND BEARING THE TRADEMARK OF THE CISPI AND NSF. HUBLESS WASTE AND VENT PIPE IS NOT PERMITTED BELOW BASE SLAB. PVC SCHEDULE 40 DWV ASTM D2665 PIPE WITH PVC MEETING ASTM B1784, "SOLID WALL" CELL CLASS 12454-B WITH ASTM 2665 SOCKET FITTINGS WITH SOLVENT WELD JOINTS IS ALSO PERMITTED WHERE APPROVED BY CODE.

INTERIOR WASTE AND VENT ABOVE SLAB: WASTE AND VENT PIPE ABOVE SLAB INSIDE BUILDING SHALL BE HUBLESS CAST IRON SOIL PIPE AND FITTINGS, MEETING ASTM A888 AND CISPI 301, MANUFACTURED BY AB & I FOUNDRY, CHARLOTTE OR TYLER PIPE AND BEARING THE TRADEMARK OF THE CISPI AND NSF.

NATURAL GAS ABOVE SLAB: GAS PIPING ABOVE GROUND SHALL BE SCHEDULE 40 BLACK STEEL WITH MALLEABLE IRON SCREWED FITTINGS, OR STANDARD WELDED FITTINGS.

CONNECTIONS TO PLUMBING FIXTURES AND EQUIPMENT: 1-1/4" AND LARGER WASTE CONNECTIONS FROM FIXTURE TRAPS TO CAST IRON PIPE SHALL BE "DWV" COPPER WITH WROUGHT COPPER DRAINAGE PATTERN FITTINGS WITH COPPER SWEAT OR COMPRESSION JOINTS AT FIXTURE TRAP CONNECTIONS AND THREADED JOINTS AT CONNECTIONS TO CAST IRON PIPE.

INDIRECT AND CONDENSATE DRAIN INSIDE BUILDING: INDIRECT AND CONDENSATE DRAIN PIPE INSTALLED INSIDE THE BUILDING SHALL BE TYPE "M" HARD COPPER WITH WROUGHT COPPER FITTINGS FOR 1" AND SMALLER AND "DWV" COPPER WITH WROUGHT COPPER DRAINAGE PATTERN FITTINGS FOR 1-1/4" AND LARGER HARD TEMPER COPPER TUBE AND SOLDERED CONNECTIONS MADE WITH 95/5 SOLDER ASTM A53 SCHEDULE 40 GALVANIZED STEEL PIPE WITH GALVANIZED MALLEABLE IRON FITTINGS INSTALL CLEANOUTS AT ELBOWS GREATER THAN 45 DEGREES.

15B PIPING AND EQUIPMENT INSULATION

DOMESTIC COLD WATER, HOT WATER, HOT WATER RECIRCULATION, INDIRECT AND CONDENSATE DRAIN PIPE (WITHIN BUILDING) 1" ONE-PIECE FIBERGLASS COVERING WITH FIRE-RESISTANT JACKET WITH SELF-SEALING LAP TO PROVIDE A CONTINUOUS VAPOR BARRIER BY CERTAINTEED, OWENS-CORNING OR ARMSTRONG. FOR HOT PIPING, PROVIDE PIPE HANGERS AND RISER CLAMPS SIZED FOR THE OUTSIDE DIAMETER OF PIPING. BUTT INSULATION TO HANGER OR RISER CLAMP FOR VERTICAL PIPE. SEAL EXPOSED INSULATION WITH INSULATION SEALER. EXCEPTION FOR VERTICAL PIPING: PROVIDE CLAMPS SIZED FOR THE OUTSIDE DIAMETER OF THE VERTICAL PIPE AND EXTEND CLAMP THROUGH INSULATION. SEAL PENETRATIONS OF INSULATION AND VAPOR BARRIER WITH WET COAT OF VAPOR BARRIER LAP CEMENT. FOR COLD PIPING AT HANGERS PROVIDE 8" LONG SECTIONS OF HIGH DENSITY, HIGH TEMPERATURE CALCIUM SILICATE BY JOHNS-MANVILLE, FIBERGLASS BY KNAUF, OR 8" LONG STYROFOAM BILLETS BY DOW OR FLEXIBLE UNICELLULAR PIPING INSULATION MEETING ASTM C 534-01A, TYPE I WITH INTEGRAL HIGH DENSITY PIPE SUPPORTS AND ENCASED IN STEEL INSULATION SHIELD BY COOPER B-LINE / ARMACELL OR APPROVED EQUAL. INSULATION SHALL BE CONTINUOUS ALONG THE PIPE SURFACE, EXCEPT AT VALVES, UNIONS, AND WHERE PIPING IS EXPOSED AT FIXTURES. PROVIDE 1" FIBERGLASS INSULATION ON VENT PIPING WITHIN SIX FEET OF VENT THROUGH THE OF ROOF. PROVIDE FIBERGLASS INSULATION ON DOMESTIC COLD AND HOT WATER PIPES INSTALLED IN WALLS AND CHASES. PROVIDE FIBERGLASS INSULATION ON DOMESTIC COLD AND HOT WATER PIPES INSTALLED IN WALLS AND CHASES. PROVIDE INSULATION PROTECTION SHIELD AT EACH HANGER FOR INSULATED PIPING.

COVER FITTINGS WITH ZESTON, KNAUF, OR EQUAL ONE-PIECE PVC PREMOLDED INSULATING COVERS. FITTING COVERS, JACKETS AND ADHESIVES SHALL NOT EXCEED FLAME SPREAD RATING OF 25 AND SMOKE DEVELOPMENT RATING OF 50 PER ASTM E84. AT ALL ELBOWS AND TEES, FILL VOIDS BETWEEN COVERS AND PIPING WITH FIBERGLASS INSULATION AND TAPE JOINTS. INSTALL PIPE INSULATION IN COMPLIANCE WITH MANUFACTURER'S RECOMMENDATIONS. WHERE PREMOLDED INSULATING FITTINGS ARE NOT APPROVED BY LOCAL AUTHORITIES, MITER INSULATION AT FITTINGS.

15B PIPING JOINTS

COPPER TUBING: JOINTS IN HARD TEMPER TUBING SHALL BE SOLDERED JOINTS USING LEAD-FREE 95/5 SOLDER EXCEPT WHERE TUBING IS INSTALLED BELOW GRADE OR BELOW THE BASE SLAB, IN WHICH CASE JOINTS SHALL BE SOLDERED WITH SILVER SOLDER (SILFOS). JOINTS IN SOFT TEMPER COPPER TUBING SHALL BE OF THE FLARED TYPE INSTALLED IN COMPLIANCE WITH THE FITTING MANUFACTURER'S RECOMMENDATIONS.

THREADED STEEL PIPE: THREADED JOINTS SHALL BE FULL AND CLEAN, CUT WITH NOT MORE THAN THREE (3) THREADS EXPOSED BEYOND THE FITTINGS. MAKE JOINTS TIGHT WITH GRAPHITE BASE PIPE JOINT COMPOUND AND PAINT EXPOSED THREADS OF FERROUS PIPE WITH ACID-RESISTING PAINT AFTER PIPING HAS BEEN TESTED AND PROVEN TIGHT. NO CAULKING, LAMP-WICK OR OTHER MATERIAL WILL BE PERMITTED FOR CORRECTION OF DEFECTIVE JOINTS.

CAST IRON PIPE BELOW GRADE: JOINTS IN BELL AND SPIGOT CAST IRON WASTE AND VENT PIPE SHALL BE NEOPRENE COMPRESSION GASKETS, TYSEAL OR EQUAL.

CAST IRON PIPE ABOVE GRADE: JOINTS IN HUBLESS PIPE SHALL BE STANDARD CISPI 310 NSF CERTIFIED BY ANACO, IDEAL, MISSON OR TYLER. JOINTS IN STORM PIPING, INCLUDING CONNECTIONS TO ROOF DRAINS, SHALL BE HEAVY DUTY COUPLINGS MEETING ASTM C1540 AND FM 1680, ANACO HUSKY #SD-2000, CLAMP-ALL "HI TORQUE" 80 IN. LB, IDEAL TRIDON "HD" OR MISSION "HEAVYWEIGHT".

PVC PIPE: CLEAN JOINTS FREE FROM DEBRIS AND MOISTURE. APPLY PVC PRIMER MEETING ASTM F656 TO EACH JOINT. APPLY SOLVENT CEMENT MEETING ASTM D2564 AND MAKE JOINT WHILE WET AND IN ACCORDANCE WITH ASTM D2855.

PIPE ADAPTERS: MAKE CONNECTION OF NEW WASTE PIPE TO NEW OR EXISTING DISSIMILAR WASTE PIPE USING ADAPTER COUPLINGS. PROVIDE FERNCO, PROFLEX 3000 SERIES OR MISSION FLEXSEAL MR56 SERIES WITH NEOPRENE ADAPTER GASKET WITH STAINLESS STEEL SHIELD AND HOSE CLAMPS FOR CONNECTING DISSIMILAR PIPES ABOVE GRADE. PROVIDE FERNCO, 1056 SERIES OR MISSION SEWER COUPLINGS WITH NEOPRENE ADAPTER GASKET AND HOSE CLAMPS FOR CONNECTING DISSIMILAR PIPES BELOW GRADE AND COAT STAINLESS STEEL BANDS WITH MASTIC.

15B PIPING INSTALLATION

GENERAL: CLEAN PIPE THOROUGHLY PRIOR TO INSTALLATION. REAM ENDS OF PIPE TO REMOVE BURRS. CUT PIPE ACCURATELY TO MEASUREMENTS TAKEN ON THE JOB. INSTALL WITH ADEQUATE CLEARANCE FOR INSTALLATION OF COVERINGS WHERE REQUIRED. PIPE SHALL NOT BE SPRUNG OR BENT. NEATLY ALIGN PIPE, CONNECT IT SECURELY, AND SUPPORT IT FROM THE BUILDING STRUCTURE WITH HANGERS AS SPECIFIED BELOW. PROVIDE CHROME-PLATED ESCUTCHEONS ON PIPES PASSING THROUGH CEILINGS, FLOORS OR WALLS OF FINISHED SPACES. RUN PIPES FREELY THROUGH FLOOR AND WALL PENETRATIONS USING PIPE SLEEVES. DO NOT GROUT IN PLACE UNLESS REQUIRED FOR STRUCTURAL FIRE INTEGRITY. INSTALL PIPE CONCEALED IN FINISHED SPACES WHEREVER POSSIBLE. USE A DIELECTRIC UNION WHERE FERROUS AND COPPER PIPE CONNECT. DIELECTRIC UNION SHALL HAVE A ZINC-PLATED STEEL BODY, A THREADED NYLON INSERT, AND INSULATING PRESSURE GASKET. NO FERROUS METAL-TO-COPPER CONNECTION MADE WITHOUT INSULATING UNIONS WILL BE ALLOWED.

HANGER & SUPPORTS: PIPE HANGERS SHALL BE AS DESCRIBED IN THE SPECIFICATIONS BY B-LINE OR EQUAL BY ANVIL, MICHIGAN, TRUSCON, OR UNISTRUT. CONNECT HANGERS TO THE STRUCTURE WITH SIDE BEAM CONNECTORS AND ALL THREAD HANGER RODS. PROVIDE ENGINEERED SUPPORT STRUTS BETWEEN JOISTS AND OTHER STRUCTURAL MEMBERS AS REQUIRED TO PROVIDE A RIGID HANGING INSTALLATION. DO NOT HANG PIPES FROM OTHER PIPES, CONDUIT OR DUCTWORK. PROVIDE HANGER RODS AND SPACE HANGERS AT INTERVALS AS SPECIFIED IN "HANGER SPACING". PROVIDE SUPPORT WITHIN 1' OF EACH ELBOW AND TEE. PROVIDE SUPPORTS WITHIN 1' OF EACH EQUIPMENT CONNECTION. PROVIDE TWO NUTS ON THREADED SUPPORTS TO SECURELY FASTEN THE SUPPORT. INSTALL HANGER TYPES OR SUPPORTS FOR VARIOUS PIPING AS FOLLOWS:

COPPER TUBE: ADJUSTABLE BAND HANGERS FOR BARE COPPER TUBE 3" AND SMALLER SHALL BE B-LINE #B3170 CT COPPER PLATED ADJUSTABLE BAND SWIVEL RING TYPE. ADJUSTABLE BAND HANGERS FOR INSULATED COPPER TUBE AND 3" SMALLER SHALL BE B-LINE #B3170 NF ADJUSTABLE BAND SWIVEL RING TYPE. CLEVIS HANGERS FOR INSULATED COPPER TUBE 4" AND LARGER SHALL BE B-LINE #B3100 GALVANIZED STEEL CLEVIS TYPE. SUPPORT EXPOSED COPPER TUBE 2" AND SMALLER TO WALLS OR IN CHASES WITH B-LINE #B3198RCT COPPER COATED EXTENSION SPLIT RING PIPE CLAMPS, 3/8" THREADED ROD AND B-LINE #B3199CT CEILING FLANGES. SUPPORT COPPER TUBE IN CHASES AND WALLS AT PLUMBING FIXTURES WITH PLASTIC OR COPPER BRACKETS SECURED TO STRUCTURE AND U-BOLTS SIZED TO BARE ON THE PIPE. RISER CLAMPS TO SUPPORT VERTICAL COPPER TUBE SHALL BE B-LINE #B3373CT COPPER COATED STEEL, CUT INSULATION, SEAL VAPOR BARRIER, AND ATTACH TO BARE TUBE.

STEEL PIPE: ADJUSTABLE BAND HANGERS FOR 2" AND SMALLER SHALL BE B-LINE #B3170 NF ADJUSTABLE BAND SWIVEL RING TYPE. CLEVIS HANGERS FOR 2-1/2" AND LARGER SHALL BE B-LINE #B3100 GALVANIZED STEEL CLEVIS TYPE. RISER CLAMPS TO SUPPORT VERTICAL PIPE SHALL BE B-LINE #B3373 GALVANIZED STEEL.

CAST IRON PIPE: ADJUSTABLE BAND HANGERS FOR 2" AND SMALLER. CLEVIS HANGERS FOR 3" AND LARGER SHALL BE B-LINE #B3100 GALVANIZED STEEL CLEVIS TYPE. RISER CLAMPS TO SUPPORT VERTICAL PIPE SHALL BE B-LINE #B3373 GALVANIZED STEEL.

INSULATION PROTECTION SHIELDS: B-LINE #B3151 OF 18 GAUGE GALVANIZED SHEET METAL. SHIELD SHALL COVER HALF OF THE CIRCUMFERENCE OF THE PIPE AND SHALL BE OF LENGTH INDICATED BY MANUFACTURER FOR PIPE SIZE AND THICKNESS OF INSULATION.

HANGER SPACING, ROD SIZES & CONNECTORS: CONNECT RODS TO STEEL BEAMS OR JOISTS WITH B-LINE #B3031 OR #B3033BEAM CLAMPS AS REQUIRED. CONNECT RODS TO CONCRETE WITH B-LINE #3014 MALLEABLE IRON SINGLE TYPE INSERTS WITH MALLEABLE IRON NUT. CONNECT RODS IN WOOD CONSTRUCTION WITH B-LINE #B3058 SIDE BEAM CONNECTORS. HANG AND SUPPORT PIPING WITH SPACING AND ROD SIZES AS FOLLOWS:

COPPER TUBE: 1-1/2" AND SMALLER - EVERY 6' WITH 3/8"HANGER RODS; 2" EVERY 10' WITH 3/8"HANGER RODS; 2-1/2" EVERY 10' WITH 3/8" HANGER RODS; 3" EVERY 10' WITH 1/2" RODS, 4" EVERY 10' WITH 5/8" HANGER RODS. SUPPORT VERTICAL COPPER TUBE EVERY 10'.

STEEL PIPE: 1" AND SMALLER - EVERY 8' WITH 3/8" HANGER RODS; 1-1/4" TO 2" EVERY 10' WITH 3/8" HANGER RODS; 2-1/2" AND 3" EVERY 10' WITH 1/2" HANGER RODS, 4" EVERY 10' WITH 5/8" HANGER RODS. SUPPORT VERTICAL STEEL PIPE EVERY 10'.

CAST IRON PIPE: EVERY 10' AND WITHIN 1' OF EACH JOINT. 2" AND SMALLER WITH 3/8" HANGER RODS; 3" WITH 1/2" HANGER RODS; 4" WITH 5/8" HANGER RODS; 6" WITH 3/4" HANGER RODS; 8" AND LARGER WITH 7/8" HANGER RODS. SUPPORT VERTICAL CAST IRON PIPE EVERY 15'.

SUPPORTS ON ROOF: SUPPORT PIPING ON ROOF WITH PRE-ENGINEERED ROOF PIPE SUPPORTS MANUFACTURED BY B-LINE, ERICO, MIRO OR PORTABLE PIPE HANGERS: 4" X 4" X 12" LONG CLOSED CELL POLYETHYLENE BLOCKS WITH EMBEDDED PRE-ENGINEERED SUPPORT STRUT OR PRE-ENGINEERED SUPPORT STRUTS WITH FACTORY PLASTIC BASES. TWO PIECE STRAPS SHALL BE CAPTIVATED AT THE SHOULDER WHEN ATTACHMENT NUT IS TIGHTENED AND DESIGNED FOR USE WITH STRUT SYSTEM. ALL NUTS, BRACKETS AND CLAMPS SHALL HAVE THE SAME FINISH AS THE CHANNELS. SUPPORT PIPE WITH SPACING AS DESCRIBED ABOVE AT A MINIMUM 7" ABOVE THE ROOF. SET SUPPORTS ON 18" X 18" X 3/16" THICK ROOF WALKWAY MATERIAL COMPATIBLE WITH ACTUAL ROOF MATERIAL BELOW GROUND INSTALLATION FOR SOIL, WASTE AND STORM: INSTALL SOIL AND WASTE PIPING TO A UNIFORM SLOPE OF NOT LESS THAN 1/4" PER FOOT FOR PIPING 4" OR LARGER, AND NOT LESS THAN 1/4" PER FOOT FOR PIPING 3" OR SMALLER LAY PIPE AT UNIFORM SLOPE, FREE FROM SAGS, WITH HUB END UPSTREAM. MAKE CHANGES IN DIRECTION FROM HORIZONTAL TO VERTICAL, AT FIXTURE BRANCHES AND OTHER BRANCH CONNECTIONS WITH SANITARY "TEES" OR SHORT SWEEP "ELLS". MAKE CHANGES IN DIRECTION FROM VERTICAL TO HORIZONTAL OR HORIZONTAL TO HORIZONTAL WITH LONG RADIUS FITTINGS, LONG SWEEPING "ELLS", COMBINATION "Y AND 1/8 BEND" FITTINGS, OR 45 DEGREE "ELLS" (1/8 BEND FITTINGS), 1/6 BEND OR 1/16 BEND AND "Y" FITTINGS. INSTALL PIPE WITH THE BARREL OF THE PIPE ON FIRM, SOLID EARTH FOR ITS ENTIRE LENGTH, AND EXCAVATE HOLES FOR THE PIPE BELLS. LAY PIPE IN A STRAIGHT LINE AND INSTALL WITH UNIFORM GRADE TO LINE WITH BATTEN BOARDS SET NOT MORE THAN 24'-0" APART. CLOSE OPEN ENDS OF PIPE WITH A STOPPER WHEN PIPE LAYING IS NOT IN PROGRESS. CENTER SPIGOTS ACCURATELY IN BELLS FOR UNIFORM CAULKING. PROVIDE A SMOOTH AND UNIFORM INVERT IN THE SYSTEM. DRILLING OR TAPPING OF SOIL AND WASTE LINES, AND SADDLE HUBS AND BANDS ARE NOT PERMITTED. LOCATE AND INSTALL SOIL AND WASTE LINES AS INDICATED ON THE DRAWINGS. DETERMINE EXACT LOCATIONS IN SUCH A MANNER AS TO MAINTAIN PROPER CLEARANCE. PRIOR TO INSTALLATION OF ANY BUILDING DRAIN PIPE, VERIFY ELEVATION OF CONNECTION POINT OF EXISTING SEWER, SERVICE LINE OR EXISTING TENANT CONNECTIONS INDICATED ON THE DRAWINGS. IF THE INSTALLATION WILL NOT TIE INTO THE INDICATED INVERT ELEVATION POINT WHILE MAINTAINING PROPER FALL, NOTIFY ARCHITECT SO THAT AN ALTERNATIVE MAY BE DETERMINED.

ABOVE GROUND INSTALLATION FOR SOIL, WASTE AND STORM: INSTALL SOIL AND WASTE PIPING TO A UNIFORM SLOPE OF NOT LESS THAN 1/8" PER FOOT FOR PIPING 4" OR LARGER, AND NOT LESS THAN 1/4" PER FOOT FOR PIPING 3" OR SMALLER. LAY PIPE AT UNIFORM SLOPE FREE FROM SAGS. SUPPORT PIPE WITHIN 12" OF EACH JOINT. MAKE CHANGES IN DIRECTION FROM HORIZONTAL TO VERTICAL, AT FIXTURE BRANCHES AND OTHER BRANCH CONNECTIONS WITH SANITARY "TEES" OR SHORT SWEEP "ELLS". MAKE CHANGES IN DIRECTION FROM VERTICAL TO HORIZONTAL OR HORIZONTAL TO HORIZONTAL WITH LONG RADIUS FITTINGS, LONG SWEEPING "ELLS", COMBINATION "Y AND 1/8 BEND" FITTINGS, OR 45 DEGREE "ELLS" (1/8 BEND FITTINGS), 1/6 BEND OR 1/16 BEND AND "Y" FITTINGS. PROVIDE A SMOOTH AND UNIFORM INVERT IN THE SYSTEM. DRILLING OR TAPPING OF SOIL AND WASTE LINES, AND SADDLE HUBS AND BANDS ARE NOT PERMITTED. LOCATE AND INSTALL SOIL AND WASTE LINES AS INDICATED ON THE DRAWINGS. DETERMINE EXACT LOCATIONS IN SUCH A MANNER AS TO MAINTAIN PROPER CLEARANCE.

PLUMBING VENT: CONNECT PLUMBING VENT PIPES TO FIXTURE DRAIN PIPES AS INDICATED ON THE DRAWINGS OR AS REQUIRED BY THE INSTALLATION PRACTICES ADOPTED AND ENFORCED BY LOCAL CODES OFFICIAL, AND EXTEND VENT PIPES FULL SIZE THROUGH THE ROOF LINE. GRADE PIPE TO A UNIFORM SLOPE SO AS TO DRAIN BACK BY GRAVITY TO THE DRAINAGE PIPING SYSTEM. VENTS PASSING THROUGH THE ROOF SHALL BE MINIMUM 3" SIZE EXCEPT IN TROPICAL CLIMATES, PER LOCAL CODES. TURN FLASHING DOWN INTO STACKS AT LEAST 2", AND EXTEND FLASHING 24" IN ALL DIRECTIONS FROM THE PIPE AT THE ROOF LINE. APPLY WHITE LEAD PIPE DOPE ON MALE STEEL PIPE THREADS. VENT LINES SHALL BE AIR AND WATER TIGHT. VENT FLOOR DRAINS INDIVIDUALLY OR CONNECT THEM TO A HORIZONTALLY VENTED LINE AS SHOWN ON THE DRAWINGS.

DOMESTIC WATER: ARRANGE COLD, HOT, AND HOT WATER RECIRCULATION PIPING TO DRAIN AT THE LOWEST POINT IN EACH SYSTEM. INSTALL AT LEAST ONE PIPE UNION ADJACENT TO ALL SHUTOFF VALVES, AT CONNECTION POINTS OF EACH PIECE OF EQUIPMENT, AND ELSEWHERE IN THE SYSTEM WHERE REQUIRED TO ALLOW PROPER MAINTENANCE. PROVIDE UNIONS OF THE GROUND JOINT TYPE. MAKE ALLOWANCE FOR EXPANSION AND CONTRACTION WHERE REQUIRED BY THE INSTALLATION. WHERE WATER PIPING OCCURS IN EXTERIOR WALLS, HOLD PIPE AS CLOSE AS POSSIBLE TO THE INTERIOR FACE OF WALL AND INSTALL INSULATION BATT OR OTHER INSULATION (MINIMUM R8) BETWEEN PIPING AND THE EXTERIOR WALL FACE.

NATURAL GAS: PITCH NATURAL GAS PIPING, AND PROVIDE ACCESSIBLE DIRT LEGS AT THE LOW POINTS. TAKE BRANCH PIPES OFF THE TOP OR SIDES OF MAIN PIPES, TO PREVENT ACCUMULATION OF WATER IN THE BRANCHES. INSTALL GAS PIPING VALVES AND UNIONS ONLY IN ACCESSIBLE LOCATIONS. DO NOT INSTALL GAS PIPE BELOW THE BASE SLAB

15B PIPING SANITIZATION

SANITIZE THE ENTIRE DOMESTIC WATER PIPING SYSTEM (COLD, HOT, AND HOT WATER RETURN) WITH A SOLUTION CONTAINING NOT LESS THAN 50 PPM AVAILABLE CHLORINE. KEEP SOLUTION IN THE SYSTEM FOR A MINIMUM OF 24 HOURS, WITH EACH VALVE BEING OPERATED SEVERAL TIMES DURING THE PERIOD. AFTER COMPLETION, FLUSH SYSTEM WITH CITY WATER UNTIL CHLORINE RESIDUAL IS LOWERED TO INCOMING CITY WATER LEVEL.

15B PIPE AND VALVE MARKERS

PROVIDE MANUFACTURER'S STANDARD PRE-PRINTED, SEMI-RIGID SNAP-ON OR PERMANENT ADHESIVE, PRESSURE-SENSITIVE VINYL PIPE MARKERS. PIPE MARKERS SHALL BE COLOR-CODED COMPLYING WITH ANSI A13.1.

INSTALL PIPE MARKERS ON EACH PLUMBING PIPING SYSTEM AND INCLUDE ARROWS TO SHOW NORMAL DIRECTION OF FLOW.

LOCATE PIPE MARKERS AND COLOR BANDS WHEREVER PIPING IS EXPOSED TO VIEW IN OCCUPIED SPACES, MACHINE ROOMS, ACCESSIBLE MAINTENANCE SPACES (SHAFTS, TUNNELS, PLENUMS) AND EXTERIOR NON-CONCEALED LOCATIONS.

PROVIDE PLASTIC LAMINATE OR BRASS VALVE TAG ON EVERY VALVE, COCK AND CONTROL DEVICE IN EACH PLUMBING PIPING SYSTEM; EXCLUDE CHECK VALVES, VALVES WITHIN FACTORY-FABRICATED EQUIPMENT UNITS, PLUMBING FIXTURE FAUCETS, CONVENIENCE AND LAWN-WATERING HOSE BIBBS, AND SHUT-OFF VALVES AT PLUMBING FIXTURES AND SIMILAR ROUGH-IN CONNECTIONS OF END-USE FIXTURES AND UNITS.

15B PLUMBING SPECIALTIES

15B WATER HAMMER ARRESTORS, AND TRAPS

PROVIDE WATER HAMMER ARRESTORS AT VALVES OR BATTERIES OF FIXTURES AS INDICATED ON THE DRAWINGS TO PREVENT WATER HAMMER. ARRESTORS SHALL BE JOSAM, SIOUX CHIEF, SMITH, PRECISION PLUMBING PRODUCTS, PROFLO, SIOUX CHIEF, WADE, WATTS, OR ZURN, STAINLESS STEEL BELLOWS TYPE, OR O-RING SEALED AND LUBRICATED ACETAL PISTON. INSTALL WATER HAMMER ARRESTORS PER THE PLUMBING AND DRAINAGE INSTITUTE PDI WH-201 INSTALLATION INSTRUCTIONS. INSTALLATION OF ARRESTORS AT BATTERIES OF FIXTURES PRECLUDES THE REQUIREMENT FOR INDIVIDUAL AIR CHAMBERS AT EACH BATTERY FIXTURE. SUBMIT CERTIFICATION THAT WATER HAMMER ARRESTORS COMPLY WITH NSF 61 ANNEX G AND / OR NSF 372.

PROVIDE WATER-SEAL TRAPS ON FLOOR DRAINS, FIXTURES AND EQUIPMENT WITH DRAIN CONNECTIONS, INCLUDING TRAPS NOT FURNISHED IN COMBINATION WITH FIXTURES AND EQUIPMENT. PLACE TRAP AS CLOSE TO THE FIXTURE OR DRAIN AS POSSIBLE. EXPOSED TRAPS IN FINISHED SPACES SHALL BE CHROME-PLATED BRASS.

PROVIDE CONVENTIONAL "P" TYPE TRAP, WATER-SEALED SELF-CLEANING DESIGN. FULL "S" TRAPS OR TRAP STANDARDS SHALL BE USED ONLY WHERE SPECIFICALLY CALLED FOR ON THE DRAWINGS OR ELSEWHERE IN THIS SPECIFICATION. TRAP WATER SEALS SHALL NOT BE LESS THAN 2", AND DEEP SEAL TRAPS SHALL BE PROVIDED WHERE SPECIFIED OR INDICATED. EACH TRAP NOT INTEGRAL WITH THE FIXTURE OR FLOOR DRAIN OR INSTALLED BELOW THE BASE SLAB SHALL BE PROVIDED WITH AN ACCESSIBLE CLEANOUT OF ADEQUATE SIZE. PROVIDE TRAP PRIMERS WHERE REQUIRED BY CODE AND WHERE INDICATED ON THE DRAWINGS.

15B CLEANOUTS, FLOOR DRAINS

CLEANOUTS ACCEPTABLE MANUFACTURER IS JAY R. SMITH. FLOOR DRAIN WITH NO EXCEPTIONS TAKEN. ACCEPTABLE MANUFACTURER IS ZURN WITH NO EXCEPTIONS TAKEN. PROVIDE LONG SWEEP FITTINGS FOR CLEANOUT EXTENSIONS; SHORT SWEEPS AT START OF RUNS OR CHANGE IN DIRECTION AND COMBINATION WYE AND EIGHT BEND FITTINGS IN HORIZONTAL RUNS. INSTALL CLEANOUTS WITH A MINIMUM OF 18" CLEAR ALL AROUND, CONSULT LOCAL CODES FOR OTHER REQUIREMENTS, FOR EASY SYSTEM MAINTENANCE. INSTALL PLUG WITH TEFLON JOINT COMPOUND.

FLOOR DRAINS: SHALL BE AS SCHEDULED ON THE DRAWINGS.

FLOOR CLEANOUTS: SHALL BE AS SCHEDULED ON THE DRAWINGS. INSTALL CLEANOUTS AT POINTS AS NOTED ON THE DRAWINGS, AT THE BUILDING EXIT; AT A MINIMUM OF EVERY 50 FEET IN HORIZONTAL SOIL AND WASTE LINES; AND AT TURNS OF PIPE GREATER THAN 45 DEGREES CLEANOUTS SHALL BE FULL SIZE OF THE PIPE UP TO 4", AND 4" SIZE FOR PIPES LARGER THAN 4". DETERMINE THE TYPE OF FLOOR COVERING TO BE USED AT EACH FLOOR CLEANOUT LOCATION AND PROVIDE TOP WITH VARIATIONS SUITABLE FOR FLOOR COVERING (CARPET MARKERS, RECESSED FOR TILE AND SCORIATED FOR UNFINISHED FLOOR). ROUGH-IN AND INSTALL EACH FLOOR CLEANOUT FLUSH WITH THE FINISHED FLOOR CONSTRUCTION.

WALL CLEANOUTS: SHALL BE AS SCHEDULED ON THE DRAWINGS. INSTALL WALL CLEANOUTS AT POINTS AS NOTED ON THE DRAWINGS; AT THE FOOT OF EACH SOIL, WASTE OR INTERIOR DOWNSPOUT STACK; AT HORIZONTAL SOIL AND WASTE BRANCHES LONGER THAN FIVE FEET NOT SERVED BY A FLOOR CLEANOUT; CONSULT LOCAL CODES FOR INSTALLATION AT SPECIFIC FIXTURE TYPES. INSTALL WALL CLEANOUTS ABOVE THE FLOOD RIM OF THE FIXTURE SERVED WITHIN FOUR FEET OF THE FLOOR AND INSTALL EXTENSIONS FROM THE CLEANOUT TEE TO THE WALL TO LOCATE THE PLUG WITHIN 2" OF THE WALL WHERE REQUIRED. INSTALL CLEANOUTS ON URINALS AND SINKS WHERE REQUIRED BY CODE.

15B VALVES, STRAINERS, HOSE BIBBS, AND UNIONS

PLUMBING SYSTEM VALVES SHALL BE DESIGNED FOR 125 PSI STEAM WORKING PRESSURE AND 200 PSI COLD WATER PRESSURE. INSTALL VALVES ON THE HOT AND COLD WATER LINES AT THE WATER HEATER CONNECTIONS AND OTHER ITEMS OF EQUIPMENT, AT BRANCHES FROM MAINS SERVING GROUPS OF FIXTURES, AND AT OTHER PLACES INDICATED OR REQUIRED BY THE INSTALLATION TO ALLOW EASE OF FUTURE MAINTENANCE. SUBMIT CERTIFICATION THAT VALVES, FITTINGS AND SPECIALTIES COMPLY WITH NSF 61 ANNEX G AND / OR NSF 372. EXCEPT FOR THE FOLLOWING: HOSE BIBBS, HYDRANTS, BACKFLOW PREVENTERS ISOLATING IRRIGATION OR MECHANICAL MAKE-UP SYSTEMS, EMERGECNY MIXING VALVES AND TRAP PRIMERS.

GATE VALVES 2" AND SMALLER: CLASS 125, RISING STEM, SOLDERED LEAD FREE CAST BRONZE BODY AND PARTS, SWEAT ENDS, WITH WEDGE DISC. BY APOLLO # 102S-LF, HAMMOND # UP-668, MILWAUKEE # UP668 OR NIBCO # S-113-LF

BALL VALVES 2" AND SMALLER: (MAY BE USED IN LIEU OF GATE VALVES UP TO 2")CLASS 150, TWO PIECE LEAD FREE CAST BRONZE BODY, WITH SWEAT ENDS, CHROME PLATED BRONZE BALL WITH CONVENTIONAL PORT, 600 PSI, BLOW-OUT PROOF STEM BY APOLLO # 70-LF-200, HAMMOND # UP8501, MILWAUKEE # UPBA-150.

GLOBE VALVES 2" AND SMALLER: CLASS 125, [LEAD FREE] CAST BRONZE BODY AND BRASS DISC, WITH SWEAT ENDS BY APOLLO # 102S-LF, HAMMOND # UP-688, MILWAUKEE # UP688 OR NIBCO # S-113-LF.

SWING CHECK VALVES 2" AND SMALLER: CLASS 125, LEAD FREE CAST BRONZE BODY AND WITH SWEAT ENDS BY APOLLO # 163S-LF,MILWAUKEE #UP-1509, OR NIBCO # S-413-Y-LF. INSTALL IN HORIZONTAL PIPE RUNS.

LIFT CHECK VALVES 2" AND SMALLER: CLASS 125, LEAD FREE CAST BRONZE BODY, STAINLESS STEEL SPRING AND WITH SWEAT ENDS BY HAMMOND # LP-947 OR NIBCO # S-413-Y-LF. INSTALL IN VERTICAL PIPE OR IN HORIZNTAL RUNS WHERE REQUIRED.

GAS COCKS 2" AND SMALLER: LUBRICATED TYPE WITH SMEI-STEEL BODY AND FULL AREA RECTANGULAR PORT WITH SCREWED ENDS BY HOMESTEAD # 601, MILLIKEN #200M OR RM ENERGY SYSTEMS # D125.

THERMOSTATIC MIXING VALVES: THERMOSTATIC MIXING VALVES SHALL BE POWERS AS DESCRIBED ON THE DRAWINGS OR EQUAL BRADLEY, LEONARD, LAWLER, SYMMONS OR WATTS MEETING ASSE 1070 WITH LEAD FREE BRASS BODY, NON-CORROSIVE INTERNAL PARTS, TAMPER RESISTANT TEMPERATURE ADJUSTMENT, UNION INLETS AND CHECK STOPS WITH STRAINERS. SET TEMPERATURE AS SCHEDULED ON THE DRAWINGS.

UNIONS: FERROUS UNIONS SHALL BE CRANE OR EQUAL, COMBINATION IRON AND BRASS, GROUND JOINT WITH SCREWED ENDS. COPPER UNIONS SHALL BE STREAMLINE OR EQUAL, CAST BRONZE SWEAT TYPE WITH GROUND JOINT. FERROUS TO COPPER UNIONS SHALL BE UNIVERSAL CONTROLS OR EQUAL, DIELECTRIC TYPE WITH THREADED NYLON INSERT.

FLOW CONTROL VALVES: FOR INSTALLATION IN HOT WATER RECIRCULATION LINES, SHALL BE BELL & GOSSETT #LF-CB1/2S "CIRCUIT SETTER" OR EQUAL BY ARMSTRONG OR NIBCO WITH LEAD FREE CAST BRONZE BODY AND BRASS BALL, TFE SEAT RINGS, CALIBRATED ORIFICE, MEMORY STOP, READOUT VALVES WITH INTERNAL CHECK VALVES, DRAIN PORT AND SWEAT CONNECTIONS. PROVIDE BALL VALVE, STRAINER AND CHECK VALVE UPSTREAM AND UNION AND BALL VALVE DOWNSTREAM OF EACH FLOW CONTROL VALVE. SET THE FLOW CONTROL VALVES TO THE FLOWS AS INDICATED ON THE DRAWINGS.

15B SYSTEM ACCESSORIES

THERMOMETERS SHALL BE AMERICAN 3" BI-METAL DIAL TYPE WITH SEPARABLE SOCKET, AND SHALL BE INSTALLED WHERE INDICATED OR REQUIRED.

PRESSURE GAUGES SHALL BE ASHCROFT 3" DIAL TYPE WITH SHUT-OFF COCK, AND SHALL BE INSTALLED WHERE INDICATED OR REQUIRED.

TRAP PRIMERS SHALL BE AS SPECIFIED ON THE DRAWINGS, PRECISION PLUMBING PRODUCTS "PRIME RITE" OR EQUAL BY MIFAB OR SIOUX CHIEF WITH BRASS BODY AND INTEGRAL VACUUM BREAKER. PROVIDE DISTRIBUTION BOX WHERE MORE THAN ONE TRAP IS INDICATED TO BE PRIMED ON THE DRAWINGS. PROVIDE ACCESS PANEL WHERE REQUIRED.

15B PLUMBING FIXTURES AND EQUIPMENT

15B PLUMBING FIXTURES

FURNISH AND INSTALL COMMERCIAL GRADE PLUMBING FIXTURES, SEE THE DRAWINGS FOR QUANTITIES AND DESCRIPTIONS. PROVIDE CHINA FIXTURES AS SCHEDULED BY AMERICAN-STANDARD AND MANSFIELD WITH NOT EXCEPTIONS TAKEN. PROVIDE STAINLESS STEEL SINKS AS SCHEDULED BY ELKAY WITH NO EXCEPTIONS TAKEN. PROVIDE ELECTRIC WATER COOLERS AS SCHEDULED BY ELKAY WITH NO EXCEPTIONS. PROVIDE MOP SINKS AS SCHEDULED BY FIAT WITH NO EXCEPTIONS TAKEN. PROVIDE FIXTURES OF SAME MANUFACTURER WHERE POSSIBLE.

FIXTURES SHOWN ON THE DRAWINGS OR SPECIFIED HEREIN SHALL BE FURNISHED AND INSTALLED, SET FIRM AND TRUE, CONNECTED TO REQUIRED PIPING SERVICES, THOROUGHLY CLEANED, LEFT CLEAN AND READY FOR USE. EXPOSED FITTINGS AND PIPING AT THE FIXTURES SHALL BE CHROME-PLATED, AND WATER SUPPLY PIPING SHALL BE VALVED AT EACH FIXTURE.

VITREOUS CHINA FIXTURES SHALL BE OF THE BEST GRADE VITREOUS WARE, WITHOUT PIT HOLES OR BLEMISHES, AND THE OUTLINES SHALL BE GENERALLY TRUE. THE ENGINEER RESERVES THE RIGHT TO REJECT ANY PIECES WHICH, IN HIS OPINION, ARE FAULTY. FIXTURES SET AGAINST WALLS SHALL HAVE GROUND BACKS AND SHALL BE CAULKED WITH SILICONE SEALANT OF A MATCHING COLOR.

15B PLUMBING FIXTURE TRIM

SUBMIT CERTIFICATION THAT FAUCETS AND TRIM COMPLY WITH NSF 61 ANNEX G AND / OR NSF 372. EXCEPT FOR THE FOLLOWING: FAUCETS NOT USED FOR DRINKING WATER OR COOKING, SHOWER VALVES AND HEADS OR FLUSH VALVES.

FIXTURE TRIM SHALL HAVE THE MANUFACTURER'S NAME STAMPED CLEARLY AND VISIBLY ON EACH ITEM.

PROVIDE SINK FAUCETS AS SCHEDULED ON DRAWINGS: BY ELKAY WITH NO EXCEPTIONS TAKEN.

PROVIDE LAVATORY FAUCETS AS SCHEDULED ON DRAWINGS: BY MOEN WITH NO EXCEPTIONS TAKEN.

FIXTURE P-TRAPS SHALL BE 17 GAUGE BRASS BODY WITH CLEANOUT, 17 GAUGE SEAMLESS TUBULAR WALL BEND WITH CAST BRASS SLIP NUT, SHALLOW STEEL FLANGE, ALL CHROME PLATED: BY MCGUIRE, BRASS CRAFT, DEARBORN BRASS, EBC, PROFLO, WATTS BRASS AND TUBULAR OR ZURN.

LAVATORY, SINK AND WATER CLOSET SUPPLIES SHALL BE SOLID BRASS ANGLE OR STRAIGHT TYPE WITH FULL TURN BRASS STEM, WHEEL HANDLE OR LOOSE KEY TYPES AS NOTED ON DRAWINGS, SHALLOW STEEL FLANGE, 3/8" COPPER RISER FLANGE, ALL CHROME PLATED, FINAL CONNECTION AS REQUIRED: BY MCGUIRE, BRASS CRAFT, EBC, PROFLO OR ZURN.

LAVATORY DRAINS SHALL BE GRID TYPE CHROME PLATED 17 GAUGE BRASS OPEN GRID WITH 1-1/4" X 6" LONG SEAMLESS BRASS TAILPIECE AND BRASS LOCKNUT WITH HEAVY RUBBER BASIN WASHER AND FIBER FRICTION WASHER, BY MCGUIRE, BRASS CRAFT, DEARBORN BRASS, EBC, PROFLO, WATTS BRASS AND TUBULAR OR ZURN.

SINK DRAINS SHALL BE BASKET TYPE WITH CHROME PLATED FORGED BRASS BASKET STRAINER AND STRAINER BODY WITH 1-1/2" X 4" LONG SEAMLESS BRASS TAILPIECE AND CAST BRASS LOCK AND COUPLING NUTS BY MCGUIRE, BRASS CRAFT, DEARBORN BRASS, EBC, PROFLO OR ZURN..

PROVIDE HANDICAP INSULATION KITS FOR LAVATORIES AND SINKS ON EXPOSED WATER AND WASTE PIPES AND FITTINGS, INCLUDING OFFSET DRAIN AND CONTINUOUS WASTE COVERS WHERE REQUIRED: BY BROCAR, MCGUIRE, PLUMBEREX "PRO-2000", PROFLO, TRAP-WRAP OR TRU-BRO.

PROVIDE SMITH, JOSAM, WADE, WATTS, OR ZURN CHAIR CARRIERS FOR MOUNTING WALL MOUNTED LAVATORIES AS DESCRIBED ON THE DRAWINGS. SECURELY FASTEN CARRIERS TO FLOOR AND TEST PER MANUFACTURER'S RECOMMENDATIONS PRIOR TO INSTALLATION OF PARTITIONS. SECURE LAVATORY CHAIR CARRIERS TO FLOOR WITH 1/2" ANCHOR BOLTS.

15B WATER HEATER

WATER HEATER SHALL BE BY A.O.SMITH, BRADFORD-WHITE, LOCHINVAR, STATE, RHEEM OR RUUD WITH CAPACITY AS SCHEDULED ON THE DRAWINGS. UNIT SHALL BE ELECTRIC GLASSLINED TANK TYPE COMPLETE WITH STEEL JACKET, FIBERGLASS INSULATION, MAGNESIUM ANODE, INTEGRAL THERMOSTATS AND CONTROLS, AND TEMPERATURE & PRESSURE RELIEF VALVE. WATER HEATER SHALL BE UL LISTED AND MEET ASHRAE 90.1B STANDARDS FOR THERMAL EFFICIENCY AND STANDBY HEAT LOSS RELIEF VALVE: WATER HEATER RELIEF VALVE SHALL BE OF THE TEST LEVER TYPE, WITH AUTOMATIC RESET, COMBINATION TEMPERATURE AND PRESSURE RELIEF, APPROVED AND STAMPED BY THE AMERICAN GAS ASSOCIATION. IT SHALL BE INSTALLED DIRECTLY ON THE HEATER TANK, OR IN THE HOT WATER OUTLET, NOT MORE THAN 3" FROM THE TANK. THE TEMPERATURE SHALL BE NORMALLY SET TO RELIEVE AT 210øF AND THE PRESSURE RELIEF SHALL BE AT 125 PSI. THE RELIEF VALVE DISCHARGE LINE SHALL BE PIPED DOWN AND TERMINATE 6" ABOVE A FLOOR DRAIN.

VACUUM RELIEF VALVE: WATTS #N36 OR WILKINS #VR-10 WITH BRONZE BODY AND SILICON DISC. VALVE SHALL OPEN AT 0.5"HG VACUUM AND BE RATED FOR 200 PSIG WORKING PRESSURE AND 250?F TEMPERATURE. INSTALL IN COLD WATER SUPPLY TO EACH WATER HEATER DOWNSTREAM OF THE SHUTOFF AND CHECK VALVES.

RECIRCULATION PUMP: SHALL BE BY B&G AS SCHEDULED ON THE DRAWINGS, OR EQUAL BY ARMSTRONG, GRUNDFOS OR TACO, OF ALL BRONZE CONSTRUCTION WITH AQUASTAT AND / OR TIMER.

EXPANSION TANK: EXPANSION TANK SHALL BE AMTROL "THERM-X-TROL" AS SCHEDULED ON THE DRAWINGS OR EQUAL BY ARMSTRONG, BELL & GOSSETT, PROFLO, TACO, OR WATTS. UNIT SHALL BE CONSTRUCTED OF WELDED CARBON STEEL LISTED FOR FOR 150 PSIG WORKING PRESSURE, WITH A FDA APPROVED BUTYL RUBBER DIAPHRAGM, TAPS FOR PRESSURE GAGE, AIR CHARGING FITTING, AND DRAIN FITTING. SUPPORT AS DETAILED ON THE DRAWINGS. CHARGE TANK WITH AIR PRESSURE EQUAL TO THE STATIC WATER PRESSURE.

BRADLEY E. CHAMBON

Architect:

brr

ARCHITECT OF RECORD:
BRR ARCHITECTURE, INC
8131 METCALF AVE
SUITE 300
OVERLAND PARK, KS 66204

www.brrarch.com

TEL: 913-262-9095
FAX: 913-262-9044

COPYRIGHT NOTICE

This drawing was prepared for use on a specific site contemporaneously with its issue date and it is not suitable for use on a different project site or at a later time. Use of this drawing for reference or example on another project requires the services of properly licensed architects and engineers. Reproduction of this drawing for reuse on another project is not authorized and may be contrary to the law.

Engineer:

HENDERSON ENGINEERS
8345 LENEXA DRIVE, SUITE 300
LENEXA, KS 66214
TEL 913.742.5000 FAX 913.742.5001
WWW.HENDERSONENGINEERS.COM
2050003713
FL. CORPORATE NO: EB 7606
EXPIRES 2/28/2021

Project Owner:

NIKE, Inc.
One Bowerman Drive
Beaverton, OR 97005
(503) 671-6453
www.nike.com

Project Address:

NIKE FACTORY STORE
WATERFORD LAKES SHOPPING CENTER
449 N. ALAFAYA TRAIL
ORLANDO, FL 32828
TEMPLATE ISSUE DATE: 11/28/2018

Fixture Package:

UNITE

Stamp:

THIS DOCUMENT IS RELEASED FOR THE PURPOSE OF PRELIMINARY SUBMITTAL BRADLEY E. CHAMBON LICENSE # 82784

IT IS NOT TO BE USED FOR CONSTRUCTION PURPOSES

BRADLEY E. CHAMBON
LICENSE # 82784

Issued For:

PERMIT/BID

Issue Date:

11/06/2020

Revisions:

NO.	REASON	DATE

PROJECT MANAGER:
KH

CHECKED BY:

DRAWN BY:
Author

Project Number:

62301411

Sheet Title:

PLUMBING SPECIFICATIONS

Sheet Number:

P4.0

✔ INSTALLER SITE INSTRUCTIONS CHECKLIST

GENERAL GUIDELINES

- ☐ TECHNICIAN TO HAVE TIS LAPTOP WITH CROSSOVER CABLE
- ☐ TECHNICIAN TO WORK WITH ADT/NIKE PROJECT MANAGER

PRIOR TO ARRIVAL ON NIKE SITE

- ☐ CHECK LOW VOLTAGE PERMIT STATUS (IF APPLICABLE)
- ☐ CHECK DOOR HARDWARE PERMIT AND SUBMITTAL STATUS (IF APPLICABLE)
- ☐ OPEN ARECONT BOXES AND RETRIEVE MAC ADDRESSES
- ☐ WRITE MAC ADDRESS IN NIKE IP CCTV ADMIN FORM ON PAGE #2 SEC. 1.2 DIG. #1.
- ☐ COMPLETE FORM THEN EMAIL TO NIKE/ADT PROJECT MANAGEMENT TEAM. EMAIL: FCOBURN@TYCO.COM

PLOT 3 COPIES OF WORKPLAN:
1 FOR INSTALL
1 FOR GC
1 FOR SITE COPY IN PANEL.

UPON ARRIVAL TO NIKE SITE

- ☐ HAND WORKPLAN COPY TO GC.
- ☐ POST PERMITS.
- ☐ TELL GC SCOPE OF WORK, ASK ABOUT ANY CONSIDERATIONS.
- ☐ INSTALL INTRUSION PANEL.
- ☐ LET SITE ELECTRICIAN KNOW OF ANY ELECTRICAL NEEDS.
- ☐ CHECK STATUS OF IP CCTV NVR SERVER & CAMERA POE SWITCH.
- ☐ CHECK STATUS OF NETWORK.
- ☐ BEGIN INSTALL OF REMAINING ITEMS.

INTRUSION INSTALLATION

- ☐ INSTALL INTRUSION DEVICES AND PROGRAM PANEL.
- ☐ VERIFY SIGNALS ARE COMMUNICATING APPROPRIATELY TO PROPER RECEIVING ACCOUNT(S).
- ☐ INTRUSION DEVICES NEED TO BE IN SERVICE THE DAY BEFORE JOB COMPLETION DATE.

CCTV INSTALLATION

- ☐ -
- ☐ -

POST INSTALLATION CHECK LIST

- ☐ TRAIN MANAGER ON IP CCTV SYSTEM
- ☐ TRAIN MANAGER ON INTRUSION SYSTEM
- ☐ VERIFY CAMERA VIEWS WITH ADT PROJECT MANAGEMENT IF NETWORK CONNECTIVITY.
- ☐ DAY OF TURN OVER, WALK THROUGH WITH NIKE DLPM.

START AND END TIMES (VERIFY WITH LOCAL MGR/GC)

THERE ARE THREE SCENARIOS FOR INSTALLATIONS. THESE TIMES MAY VARY REQUIRING THE LOCAL INSTALL TEAM TO WORK WITH THE GC, NATIONAL ACCOUNT COORDINATOR, AND NIKE TEAM PRIOR TO STARTING THE INSTALLATION TO CONFIRM.
NEW CONSTRUCTION: 7AM-4PM
REMODELS: CAN BE MIXED BUT USUALLY NIGHT WORK 9PM-6AM
CAPITAL JOBS* BEFORE STORE OPENS: 7AM-9:45AM
*NIKE REQUIRES TIS TO START AT 7:00 AM AND BE OFF THE SALES FLOOR BY 9:45 AM SINCE MOST STORES OPEN AT 10:00AM. IT IS VITAL THAT TIS CLEARS THE FLOOR OF ALL HAZARDS TO NIKE STORE EMPLOYEES AND ITS CUSTOMERS. AT 9:50 AM, THE INSTALLATION TECHNICIAN SHOULD BE IN THE BACK INVENTORY ROOM AND/OR SERVICE AREA COMPLETING THE CAMERA INSTALLATIONS AND/OR INTRUSION / NVR SETUP.
IF THE INSTALLATION IN THE FRONT OF THE STORE CAN BE COMPLETED THE FIRST DAY DURING THE ALLOTTED TIME (7AM-9:50AM) AND THE REMAINDER OF THE INSTALLATION IS THE CAMERAS AND NVR IN THE BACK OF THE STORE, COMMUNICATE THIS TO THE STORE MANAGER SO HE/SHE DOES NOT HAVE TO RETURN THE FOLLOWING DAY AT 7AM.
IF A RETURN THE FOLLOWING DAY AT 7AM IS NECESSARY TO COMPLETE THE FRONT OF THE STORE (SALES FLOOR), COMMUNICATE THIS TO THE STORE MANAGER TO ENSURE SOMEONE WILL BE ON SITE THE FOLLOWING DAY TO ALLOW TIS ENTRY TO THE STORE.
IT IS VERY IMPORTANT THAT WE DO NOT INTERRUPT THE STORES OPERATION AT ANY TIME WHILE THEY ARE OPEN FOR BUSINESS.
IT IS ALSO IMPORTANT TO GET AS MUCH ACCOMPLISHED AS POSSIBLE WITHIN THE TIME FRAME ALLOTTED ON SITE.
START AND END FOR NEW STORES SHOULD FOLLOW YOUR LOCAL OFFICE HOURS.

KEEP AN OPEN LINE OF COMMUNICATION WITH THE STORE MANAGER/GC!

LABELING OF CABLES AND PANELS

- ALL PANELS SHOULD HAVE A LABEL TO DESCRIBE ITS FUNCTION, I.E. 24VDC POWER SUPPLY FOR LOCK POWER AND AUXILIARY DEVICES.
- ALL CABLES SHOULD BE LABELED AT PANEL AND DRESSED NEATLY. I.E. FRONT LOBBY DOOR READER, FRONT LOBBY DOOR DSM, FRONT LOBBY DOOR RTE, ETC.

TYCO TO UTILIZE A LABEL (NOT A SHARPIE). IF WRITTEN ON A LABEL, ALL WRITING MUST BE NEAT AND LEGIBLE.

GROUNDING

ENSURE INTRUSION PANEL IS GROUNDED TO A GOOD EARTH GROUND AT PANEL HEAD-END LOCATION. NO ELECTRICAL OR CONDUIT GROUNDS.

NIKE
NIKE FACTORY STORE

ORLANDO
NIKE FACTORY STORE
413 N Alafaya Trail
Orlando, FL 32828

0 REVISION NUMBER

PLEASE CHECK WITH THE GENERAL CONTRACTOR TO INSURE YOU HAVE THE LATEST REVISION OF THIS WORKPLAN.

CCTV SYSTEM

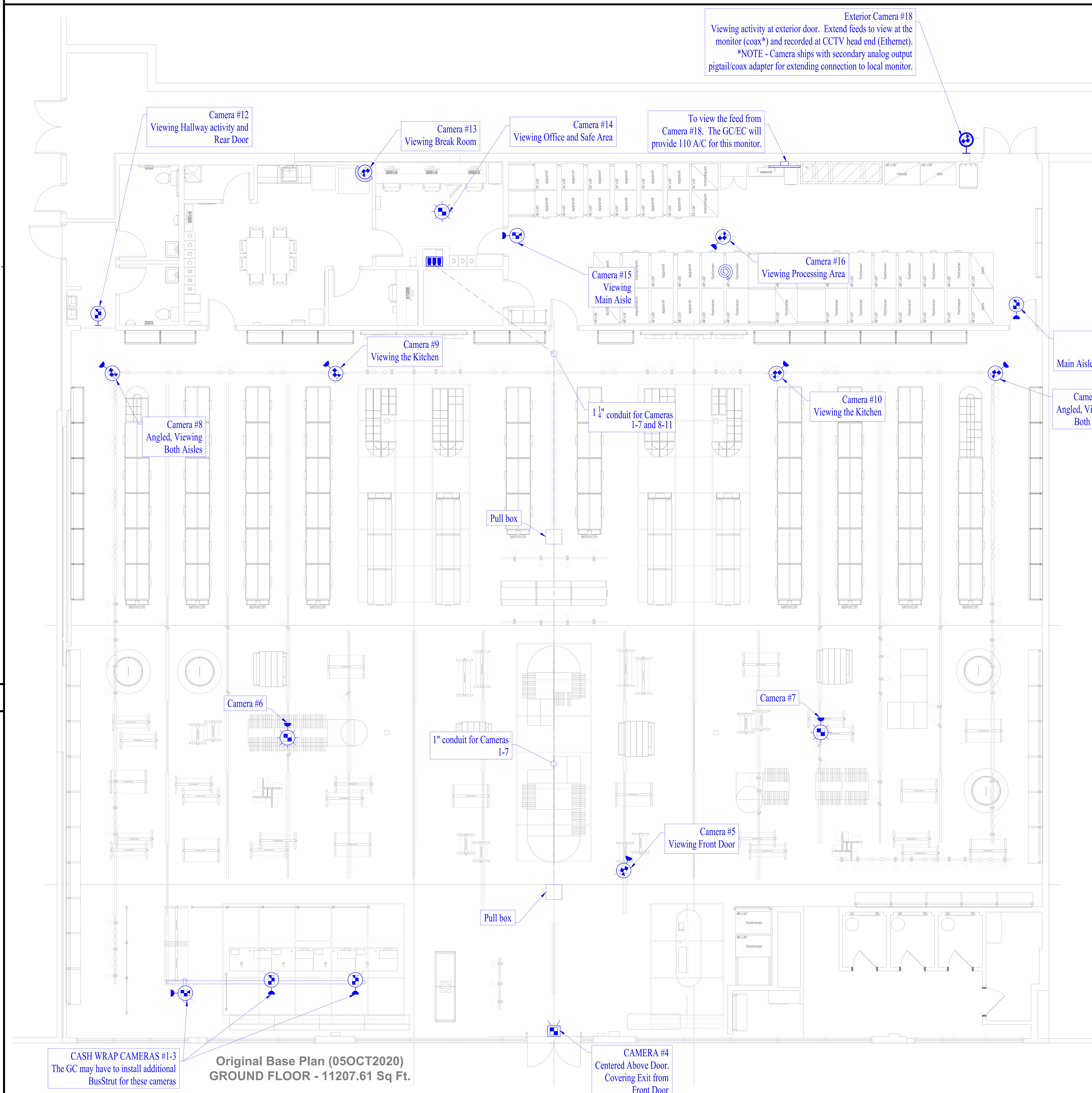

SITE SPECIFIC NOTE:

1. MPOS CAMERA VIEW: MOUNT CAMERA TO VIEW OVER THE MPOS AND CASH DRAWER WHEN OPENED. INSTALL APPROXIMATELY 6 " AND CENTERED FROM THE BACK OF THE CASH DRAWER. HAVE EXTRA CABLE COILED AT THE CAMERA TO RELOCATE IF NEEDED. VERIFY VIEW IS NOT OBSTRUCTED BY FIXTURES. SEE CAMERA DETAIL SHEET (C9) FOR MPOS CAMERA EXAMPLE VIEW.

PROPRIETARY INFORMATION

THIS PROPOSAL BEING SUPPLIED IS OWNED BY, AND PROPRIETARY TO, TYCO INTEGRATED SECURITY. IT IS BEING SUPPLIED UNDER EXPRESS CONDITIONS THAT:
(1) IT IS ACKNOWLEDGED THAT THE INFORMATION CONTAINS PROPRIETARY INFORMATION OF TIS, AND THEREFORE WILL BE TREATED AS CONFIDENTIAL INFORMATION AND CANNOT BE COPIED OR REPRODUCED WITHOUT THE EXPRESS WRITTEN CONSENT OF TIS;
(2) THE INFORMATION IS USED EXCLUSIVELY BY TIS PERSONNEL TO EXTRACT THE INFORMATION WHICH THEY DESIRE;
(3) THE INFORMATION SHALL NOT BE USED FOR ANY OTHER PURPOSES;
(4) THE INFORMATION SHALL NOT BE DISCLOSED TO ANY CONTRACTORS, SUPPLIERS, OR OTHER NON – TIS EMPLOYEES WITH THE EXCEPTION OF TIS, PROJECT CONSULTANTS;
(5) THE INFORMATION IS RETURNED TO TIS UPON REQUEST.

DEVICE LEGEND

NEW DEVICES ARE SHOWN IN BLUE
EXISTING DEVICES ARE SHOWN IN RED
DEVICES BEING RELOCATED ARE SHOWN IN GRAY

SYMBOL	DESCRIPTION	SITE QTY
	FIXED IP CAMERA	12
	360° CAMERA	3
	FIXED EXTERIOR IP CAMERA	1
	WIDE ANGLE LENS CAMERA	1
	DOOR FRAME IP CAMERA	1
	FIXED I.R. ANALOG CAMERA	0
	FIXED ANALOG CAMERA	0
	CCTV HEADEND	1
	MONITOR	1
SWTR	ANALOG VIDEO SWITCHER	0
PVM	PUBLIC VIEW MONITOR	0
	FUTURE 150FT COIL NETWORK DROP	1

REVISION HISTORY

#	REVISION	DATE	BY
0	ORIGINAL DRAWINGS RELEASED	05OCT2020	RAK/JML

CAMERA MOUNT KEY

MOUNT	CAMERA TYPE
SURFACE MOUNT (NO SYMBOL) USED FOR SOFFET OR TILE	FIXED DOME
WALL MOUNT	FIXED DOME
POLE MOUNT	FIXED DOME
ROOF OR PARAPHET MOUNT	FIXED DOME
PENDANT MOUNT WITH CONDUIT	FIXED DOME
PENDANT MOUNT ON BusSTRUT	FIXED DOME
CORNER MOUNT	FIXED DOME

MOUNT TYPE SYMBOL — CAMEARA TYPE *SEE DEVICE LEGEND

CCTV

WIRE DESCRIPTION	MODEL #	FUNCTION
CAT5 NETWORK CABLE ORANGE (PLENUM RATED)	PAIGE # 710536EOR	CAMERA VIDEO SIGNAL AND POWER
SIAMESE COAX CABLE	PAIGE # 808050	CAMERA VIDEO SIGNAL AND POWER

ORLANDO
NIKE FACTORY STORE
413 N Alafaya Trail
Orlando, FL 32828

CCTV SYSTEMS

NIKE
NIKE FACTORY STORE

This design including specifications, drawings, and design concepts is the property of Tyco Integrated Security (TIS), and is furnished on a confidential basis, with the expressed understanding that will not be sold, transfered, copied, or used to the detriment of TIS without written permission. The recipient further agrees not to disclose the contents to any other party except for the specific purpose contracted with TIS. TIS makes no representations as to the operability or accuracy of any systems, subsystems, assemblies, or other information contained herein unless specifically identified for Construction.

GCOE - BIRMINGHAM
1800 International Park Drive, Suite 500
Birmingham, AL 35243
AESBL Lic #1667

SHEET TITLE:
SECURITY WORKPLAN

DRAWN BY: ARUN
ENGINEERED BY: WC
SCALE: NOT TO SCALE (NTS)
SHEET #
SE-1.0

PRE-CONSTRUCTION NOTES

INITIAL MEETING WITH GENERAL CONTRACTOR

1. FIELD VERIFY IP LOCATIONS WITH GENERAL CONTRACTOR TO ENSURE PROPER PLACEMENTS. (IF ANY QUESTIONS ARISE, PLEASE CALL PROJECT MANAGMENT.)

2. DO NOT INSTALL CASH WRAP CAMERAS UNTIL CASH REGISTERS ARE INSTALLED. LEAVE WIRE COILED UP.

CONSTRUCTION NOTES

INITIAL MEETING WITH LOCAL CUSTOMER

1. FIELD VERIFY CAMERA LOCATIONS WITH LOCAL CUSTOMER TO ENSURE PROPER PLACEMENTS.

2. RUN CAT5 CABLE TO EVERY CAMERA LOCATION. THE CAT5 IS TO BE LABELED ACCORDINGLY AT BOTH ENDS, LOOPED AND NEATLY COILED ABOVE CAMERA LOCATION.

3. ALL CABLE TO BE RUN THROUGH LOW VOLTAGE RACEWAY (NIKE BUS STRUT SYSTEM). LEAVE PULL-STRINGS IN ALL J-HOOKS, BRIDAL RINGS, AND NIKE BUS STRUT.

JCI/TYCO DOMESTIC CONTACTS

NATIONAL ACCOUNT MANAGER
JOSH KRIER
OFFICE NO.: 702-301-4710
CELL PHONE NO.: 702-301-4710
EMAIL: JOSH.KRIER@JCI.COM

NASC INSTALLATION PRODECT COORDINATOR
JESSE SNYDER
OFFICE NO.:800.453.2247ext:5958
FAX NO.:317-913-7706
EMAIL: JESSE.SNYDER@JCI.COM

PROGRAM MANAGER
FRANK COBURN
OFFICE NO.: 503-469-7224
CELL PHONE NO.: 503-793-5046
EMAIL: FRANK.COBURN@JCI.COM

NATIONAL RETAIL COORDINATOR
CHARLES ROBERSON
OFFICE NO.:
CELL PHONE NO.: 561-939-3030
EMAIL:CHARLES.ROBERSON@JCI.COM

APPLICATIONS ENGINEER
JASON LAROCHELLE
OFFICE NO.: 205-948-2845
CELL PHONE NO.: 205-213-4274
EMAIL:JASON.LAROCHELLE@JCI.COM

GLOBAL PROGRAM COORDINATOR
MARY BISHOP TRIPPE
OFFICE NO.: 205-943-4278
CELL PHONE NO.: 205-335-4896
EMAIL:MARY.BISHOP.TRIPPE@JCI.COM

NIKE DOMESTIC CONTACT

DOMESTIC LOSS PREVENTION ANALYST
SARAH HAMMEL
OFFICE PHONE NO.: 503-532-3950
CELL PHONE NO.: 503-819-5680
EMAIL ADDRESS: SARAH.HAMMEL@NIKE.COM

CAMERA MOUNTING NOTES

Sales Floor/Front of House (FOH):
Cameras shall be pole mounted or supported from bus strut at 11ft8in (3.6meters) aff. If the lighting system is below 11ft 8in, install the camera slightly lower than the lighting system to avoid glare and obstructions.

Back of House (BOH) and office areas:
Cameras shall be pole mounted at 11ft8in (3.6meters) aff. If there are obstructed views, mount the camera on the wall at 9ft (2.74meters). Cameras should be surfaced mounted in office or similar areas with drop ceilings

Reference the Camera Details sheet of this document for expected views for site verification prior to store sign off acceptance.

SIGN OFF SHEET

SIGN OFF SHEET INSTRUCTIONS:

Upon job completion, please completely fill out the manager sign off sheet. Then take a picture of the filled out form and email to Mary Bishop Trippe:
mary.bishop.trippe@jci.com

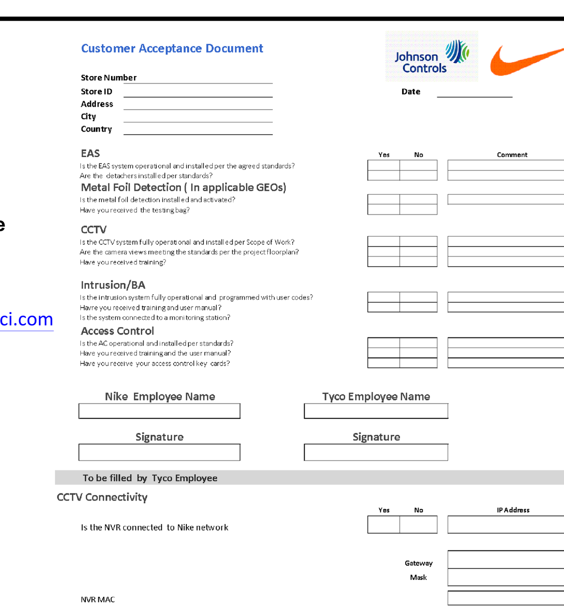

INSTALLER SITE INSTRUCTIONS CHECKLIST

GENERAL GUIDELINES

- ☐ TECHNICIAN TO HAVE TIS LAPTOP WITH CROSSOVER CABLE
- ☐ TECHNICIAN TO WORK WITH ADT/NIKE PROJECT MANAGER

PRIOR TO ARRIVAL ON NIKE SITE

- ☐ CHECK LOW VOLTAGE PERMIT STATUS (IF APPLICABLE)
- ☐ CHECK DOOR HARDWARE PERMIT AND SUBMITTAL STATUS (IF APPLICABLE)
- ☐ OPEN ARECONT BOXES AND RETRIEVE MAC ADDRESSES
- ☐ WRITE MAC ADDRESS IN NIKE IP CCTV ADMIN FORM ON PAGE #2 SEC. 1.2 DIG. #1.
- ☐ COMPLETE FORM THEN EMAIL TO NIKE/ADT PROJECT MANAGEMENT TEAM. EMAIL: FCOBURN@TYCO.COM

PLOT 3 COPIES OF WORKPLAN:
1 FOR INSTALL
1 FOR GC
1 FOR SITE COPY IN PANEL.

UPON ARRIVAL TO NIKE SITE

- ☐ HAND WORKPLAN COPY TO GC.
- ☐ POST PERMITS.
- ☐ TELL GC SCOPE OF WORK, ASK ABOUT ANY CONSIDERATIONS.
- ☐ INSTALL INTRUSION PANEL.
- ☐ LET SITE ELECTRICIAN KNOW OF ANY ELECTRICAL NEEDS.
- ☐ CHECK STATUS OF IP CCTV NVR SERVER & CAMERA POE SWITCH.
- ☐ CHECK STATUS OF NETWORK.
- ☐ BEGIN INSTALL OF REMAINING ITEMS.

INTRUSION INSTALLATION

- ☐ INSTALL INTRUSION DEVICES AND PROGRAM PANEL.
- ☐ VERIFY SIGNALS ARE COMMUNICATING APPROPRIATELY TO PROPER RECEIVING ACCOUNT(S).
- ☐ INTRUSION DEVICES NEED TO BE IN SERVICE THE DAY BEFORE JOB COMPLETION DATE.

CCTV INSTALLATION

- ☐ -
- ☐ -

POST INSTALLATION CHECK LIST

- ☐ TRAIN MANAGER ON IP CCTV SYSTEM
- ☐ TRAIN MANAGER ON INTRUSION SYSTEM
- ☐ VERIFY CAMERA VIEWS WITH ADT PROJECT MANAGEMENT IF NETWORK CONNECTIVITY.
- ☐ DAY OF TURN OVER, WALK THROUGH WITH NIKE DLPM.

START AND END TIMES (VERIFY WITH LOCAL MGR/GC)

THERE ARE THREE SCENARIOS FOR INSTALLATIONS. THESE TIMES MAY VARY REQUIRING THE LOCAL INSTALL TEAM TO WORK WITH THE GC, NATIONAL ACCOUNT COORDINATOR, AND NIKE TEAM PRIOR TO STARTING THE INSTALLATION TO CONFIRM.
NEW CONSTRUCTION: 7AM-4PM
REMODELS: CAN BE MIXED BUT USUALLY NIGHT WORK 9PM-6AM
CAPITAL JOBS* BEFORE STORE OPENS: 7AM-9:45AM
*NIKE REQUIRES TIS TO START AT 7:00 AM AND BE OFF THE SALES FLOOR BY 9:45 AM SINCE MOST STORES OPEN AT 10:00AM. IT IS VITAL THAT TIS CLEARS THE FLOOR OF ALL HAZARDS TO NIKE STORE EMPLOYEES AND ITS CUSTOMERS. AT 9:50 AM, THE INSTALLATION TECHNICIAN SHOULD BE IN THE BACK INVENTORY ROOM AND/OR SERVICE AREA COMPLETING THE CAMERA INSTALLATIONS AND/OR INTRUSION / NVR SETUP.
IF THE INSTALLATION IN THE FRONT OF THE STORE CAN BE COMPLETED THE FIRST DAY DURING THE ALLOTTED TIME (7AM-9:50AM) AND THE REMAINDER OF THE INSTALLATION IS THE CAMERAS AND NVR IN THE BACK OF THE STORE, COMMUNICATE THIS TO THE STORE MANAGER SO HE/SHE DOES NOT HAVE TO RETURN THE FOLLOWING DAY AT 7AM.
IF A RETURN THE FOLLOWING DAY AT 7AM IS NECESSARY TO COMPLETE THE FRONT OF THE STORE (SALES FLOOR), COMMUNICATE THIS TO THE STORE MANAGER TO ENSURE SOMEONE WILL BE ON SITE THE FOLLOWING DAY TO ALLOW TIS ENTRY TO THE STORE.
IT IS VERY IMPORTANT THAT WE DO NOT INTERRUPT THE STORES OPERATION AT ANY TIME WHILE THEY ARE OPEN FOR BUSINESS.
IT IS ALSO IMPORTANT TO GET AS MUCH ACCOMPLISHED AS POSSIBLE WITHIN THE TIME FRAME ALLOTTED ON SITE.
START AND END FOR NEW STORES SHOULD FOLLOW YOUR LOCAL OFFICE HOURS.

KEEP AN OPEN LINE OF COMMUNICATION WITH THE STORE MANAGER/GC!

LABELING OF CABLES AND PANELS

- ALL PANELS SHOULD HAVE A LABEL TO DESCRIBE ITS FUNCTION, I.E. 24VDC POWER SUPPLY FOR LOCK POWER AND AUXILIARY DEVICES.
- ALL CABLES SHOULD BE LABELED AT PANEL AND DRESSED NEATLY. I.E. FRONT LOBBY DOOR READER, FRONT LOBBY DOOR DSM, FRONT LOBBY DOOR RTE, ETC.

TYCO TO UTILIZE A LABEL (NOT A SHARPIE). IF WRITTEN ON A LABEL, ALL WRITING MUST BE NEAT AND LEGIBLE.

GROUNDING

ENSURE INTRUSION PANEL IS GROUNDED TO A GOOD EARTH GROUND AT PANEL HEAD-END LOCATION. NO ELECTRICAL OR CONDUIT GROUNDS.

NIKE
NIKE FACTORY STORE

ORLANDO
NIKE FACTORY STORE
413 N Alafaya Trail
Orlando, FL 32828

0 REVISION NUMBER
PLEASE CHECK WITH THE GENERAL CONTRACTOR TO INSURE YOU HAVE THE LATEST REVISION OF THIS WORKPLAN.

BA SYSTEM

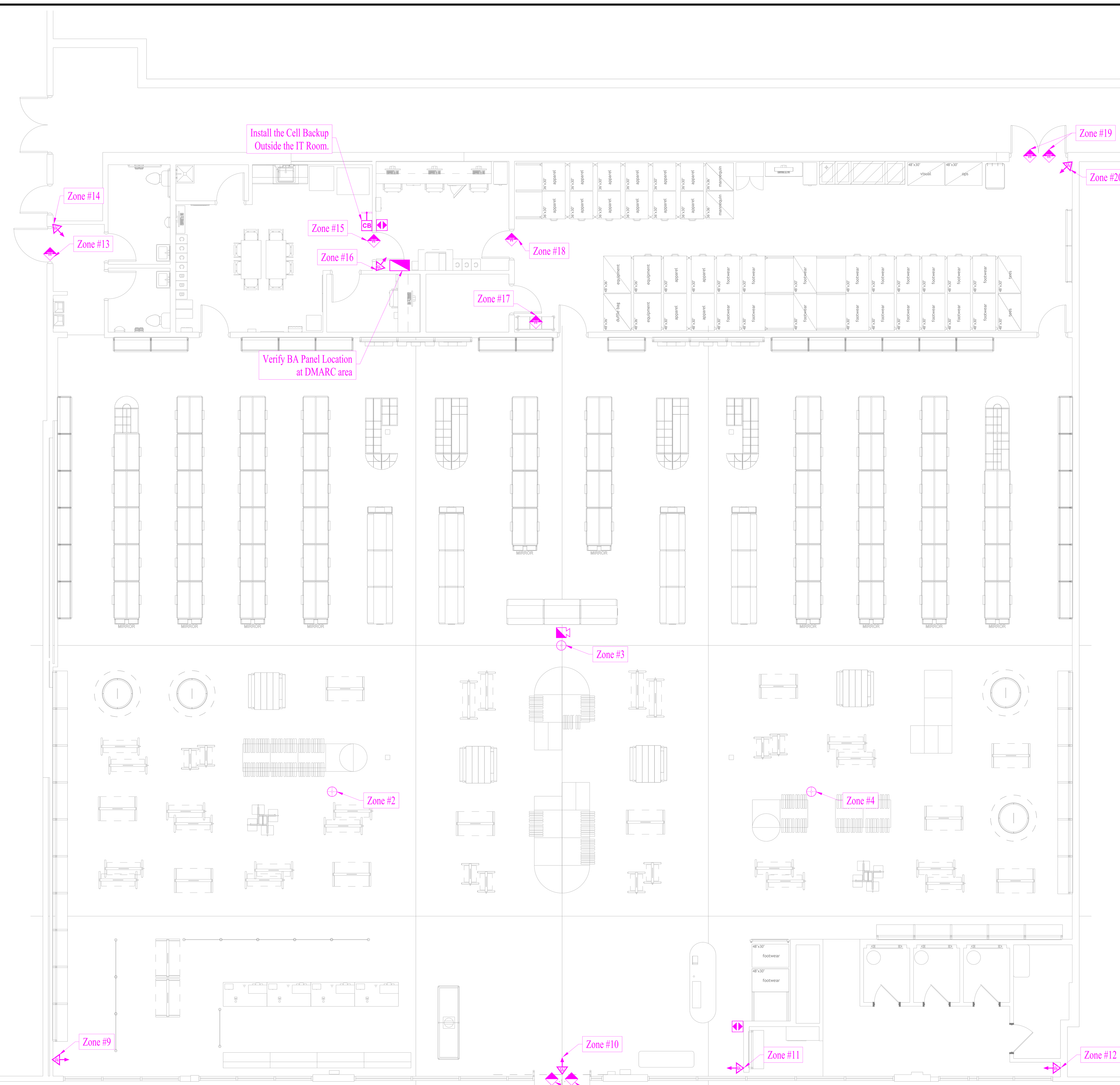

Original Base Plan (05OCT2020)
GROUND FLOOR - 11207.61 Sq Ft.

PROPRIETARY INFORMATION

THIS PROPOSAL BEING SUPPLIED IS OWNED BY, AND PROPRIETARY TO, TYCO INTEGRATED SECURITY. IT IS BEING SUPPLIED UNDER EXPRESS CONDITIONS THAT:
(1) IT IS ACKNOWLEDGED THAT THE INFORMATION CONTAINS PROPRIETARY INFORMATION OF TIS, AND THEREFORE WILL BE TREATED AS CONFIDENTIAL INFORMATION AND CANNOT BE COPIED OR REPRODUCED WITHOUT THE EXPRESS WRITTEN CONSENT OF TIS;
(2) THE INFORMATION IS USED EXCLUSIVELY BY TIS PERSONNEL TO EXTRACT THE INFORMATION WHICH THEY DESIRE;
(3) THE INFORMATION SHALL NOT BE USED FOR ANY OTHER PURPOSES;
(4) THE INFORMATION SHALL NOT BE DISCLOSED TO ANY CONTRACTORS, SUPPLIERS, OR OTHER NON – TIS EMPLOYEES WITH THE EXCEPTION OF TIS, PROJECT CONSULTANTS;
(5) THE INFORMATION IS RETURNED TO TIS UPON REQUEST.

DEVICE LEGEND

NEW DEVICES ARE SHOWN IN MAGENTA
EXISTING DEVICES ARE SHOWN IN RED
DEVICES BEING RELOCATED ARE SHOWN IN GRAY

SYMBOL	DESCRIPTION	SITE QTY
	BURGLAR ALARM CONTROL PANEL	1
PS	BURGLAR ALARM POWER SUPPLY PANEL	0
ZE	BURGLAR ALARM ZONE EXPANDER	0
	BA KEYPAD	2
	CEILING MOUNT MOTION DETECTOR (360°)	2
	WALL MOUNT MOTION DETECTOR	0
	WIRELESS WALL MOUNT MOTION DETECTOR	7
	LONG RANGE MOTION DETECTOR	0
	WIRELESS LONG RANGE MOTION DETECTOR	0
	DOOR CONTACT	2
	WIRELESS DOOR CONTACT	6
	DOOR CONTACT (DPDT)	0
	WIRELESS DOOR CONTACT (DPDT)	0
	OVERHEAD DOOR CONTACT	0
W	WIRELESS OVERHEAD DOOR CONTACT	0
	INTERIOR SOUNDER (BA ALARM)	1
PB	PANIC BUTTON	0
CB	CELL BACKUP	1
RPTR	BA WIRELESS REPEATER	0

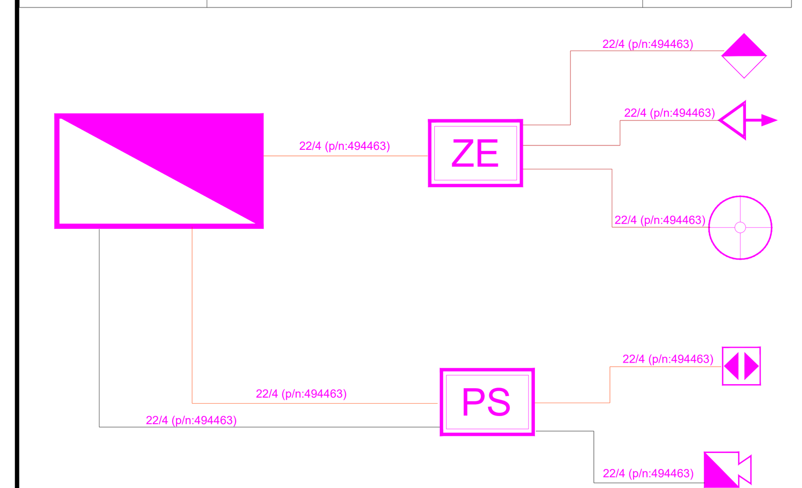

WIRE SCHEDULES

BURGLAR ALARM

WIRE DESCRIPTION	MODEL #	FUNCTION
TRUNK, 16/2 + 19/2 SOLID WHITE PLENUM 500 RL	PAIGE # 494460	KEYPAD BUS, DEVICE COMM TRUNK
22/4 SOLID WHITE PLENUM 500 BX	PAIGE # 494463	DEVICE WIRE

PRE-CONSTRUCTION NOTES

INITIAL MEETING WITH GENERAL CONTRACTOR

1. FIELD VERIFY IP LOCATIONS WITH GENERAL CONTRACTOR TO ENSURE PROPER PLACEMENTS. (IF ANY QUESTIONS ARISE, PLEASE CALL PROJECT MANAGMENT.)

2. DO NOT INSTALL CASH WRAP CAMERAS UNTIL CASH REGISTERS ARE INSTALLED. LEAVE WIRE COILED UP.

CONSTRUCTION NOTES

INITIAL MEETING WITH LOCAL CUSTOMER

1. FIELD VERIFY CAMERA LOCATIONS WITH LOCAL CUSTOMER TO ENSURE PROPER PLACEMENTS.

2. RUN CAT5 CABLE TO EVERY CAMERA LOCATION. THE CAT5 IS TO BE LABELED ACCORDINGLY AT BOTH ENDS, LOOPED AND NEATLY COILED ABOVE CAMERA LOCATION.

3. ALL CABLE TO BE RUN THROUGH LOW VOLTAGE RACEWAY (NIKE BUS STRUT SYSTEM). LEAVE PULL-STRINGS IN ALL J-HOOKS, BRIDAL RINGS, AND NIKE BUS STRUT.

JCI/TYCO DOMESTIC CONTACTS

NATIONAL ACCOUNT MANAGER
JOSH KRIER
OFFICE NO.: 702-301-4710
CELL PHONE NO.: 702-301-4710
EMAIL: JOSH.KRIER@JCI.COM

PROGRAM MANAGER
FRANK COBURN
OFFICE NO.: 503-469-7224
CELL PHONE NO.: 503-793-5046
EMAIL: FRANK.COBURN@JCI.COM

APPLICATIONS ENGINEER
JASON LAROCHELLE
OFFICE NO.: 205-948-2845
CELL PHONE NO.: 205-213-4274
EMAIL:JASON.LAROCHELLE@JCI.COM

NASC INSTALLATION PRODECT COORDINATOR
JESSE SNYDER
OFFICE NO.:800.453.2247ext:5958
FAX NO.:317-913-7706
EMAIL: JESSE.SNYDER@JCI.COM

NATIONAL RETAIL COORDINATOR
CHARLES ROBERSON
OFFICE NO.:
CELL PHONE NO.: 561-939-3030
EMAIL:CHARLES.ROBERSON@JCI.COM

GLOBAL PROGRAM COORDINATOR
MARY BISHOP TRIPPE
OFFICE NO.: 205-943-4278
CELL PHONE NO.: 205-335-4896
EMAIL:MARY.BISHOP.TRIPPE@JCI.COM

NIKE DOMESTIC CONTACT

DOMESTIC LOSS PREVENTION ANALYST
SARAH HAMMEL
OFFICE PHONE NO.: 503-532-3950
CELL PHONE NO.: 503-819-5680
EMAIL ADDRESS: SARAH.HAMMEL@NIKE.COM

SIGN OFF SHEET

SIGN OFF SHEET INSTRUCTIONS:

Upon job completion, please completely fill out the manager sign off sheet. Then take a picture of the filled out form and email to Mary Bishop Trippe: mary.bishop.trippe@jci.com

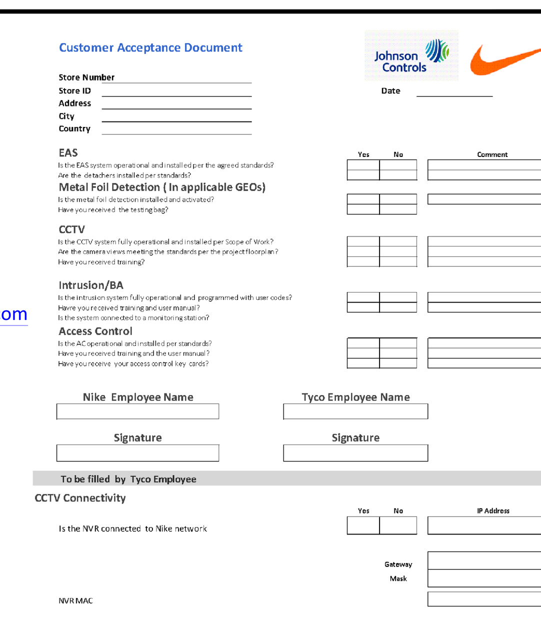

REVISION HISTORY

BA SYSTEMS

ORLANDO
NIKE FACTORY STORE
413 N Alafaya Trail
Orlando, FL 32828

NIKE
NIKE FACTORY STORE

This design including specifications, drawings, and design concepts is the property of Tyco Integrated Security (TIS), and is furnished on a confidential basis, with the expressed understanding that will not be sold, transfered, copied, or used to the detriment of TIS without written permission. The recipient further agrees not to disclose the contents to any other party except for the specific purpose contracted with TIS. TIS makes no representations as to the operability or accuracy of any systems, subsystems, assemblies, or other information contained herein unless specifically identified for Construction.

GCOE - BIRMINGHAM
1800 International Park Drive, Suite 500
Birmingham, AL 35243
AESBL Lic #1667

SHEET TITLE:
SECURITY WORKPLAN

DRAWN BY: ARUN
ENGINEERED BY: WC
SCALE: NOT TO SCALE (NTS)
SHEET #
SE-2.0

INSTALLER SITE INSTRUCTIONS CHECKLIST

GENERAL GUIDELINES

- TECHNICIAN TO HAVE TIS LAPTOP WITH CROSSOVER CABLE
- TECHNICIAN TO WORK WITH TIS/NIKE PROJECT MANAGER

PRIOR TO ARRIVAL ON NIKE SITE

- CHECK LOW VOLTAGE PERMIT STATUS (IF APPLICABLE)
- CHECK DOOR HARDWARE PERMIT AND SUBMITTAL STATUS (IF APPLICABLE)
- OPEN ARECONT BOXES AND RETRIEVE MAC ADDRESSES
- WRITE MAC ADDRESS IN NIKE IP CCTV ADMIN FORM.
- COMPLETE FORM THEN FAX IN OR EMAIL TO NIKE/TIS PROJECT MANAGEMENT TEAM.
  FAX:
  EMAIL:
- CALL TO CONFIRM ARRIVAL OF THE DATA PACKET SO THE CCTV DATABASE CAN BE BUILT.
  PHONE:
- PLOT 3 COPIES OF WORKPLAN, 1 FOR INSTALL, 1 FOR GC, 1 FOR SITE COPY IN PANEL.

UPON ARRIVAL TO NIKE SITE

- HAND WORKPLAN COPY TO GC.
- POST PERMITS.
- TELL GC SCOPE OF WORK, ASK ABOUT ANY CONSIDERATIONS.
- INSTALL INTRUSION PANEL.
- LET SITE ELECTRICIAN KNOW OF ANY ELECTRICAL NEEDS.
- CHECK STATUS OF IP CCTV NVR SERVER & CAMERA POE SWITCH.
- CHECK STATUS OF NETWORK.
- BEGIN INSTALL OF REMAINING ITEMS.

INTRUSION INSTALLATION

- INSTALL INTRUSION DEVICES AND PROGRAM PANEL.
- VERIFY SIGNALS ARE COMMUNICATING APPROPRIATELY TO PROPER RECEIVING ACCOUNT(S).

CCTV INSTALLATION

- LOAD NVR SOFTWARE ON IP CCTV SERVER (MUST BE CERTIFIED BY MANUFACTURER).
- PROGRAM CAMERAS INTO SYSTEM SERVER.
- IF NETWORK IS AVAILABLE, CONFIGURE TO COMMUNICATE STORE SERVER TO NIKE CAMPUS DIRECTORY SERVER.
- ADJUST ALL CAMERAS (USE CAMERA PROGRAMMING GUIDE).

POST INSTALLATION CHECK LIST

- TRAIN MANAGER ON IP CCTV SYSTEM
- TRAIN MANAGER ON INTRUSION SYSTEM
- VERIFY CAMERA VIEWS WITH ADT PROJECT MANAGEMENT IF NETWORK CONNECTIVITY.

START AND END TIMES (VERIFY WITH LOCAL MGR/GC)

THERE ARE THREE SCENARIOS FOR INSTALLATIONS. THESE TIMES MAY VARY REQUIRING THE LOCAL INSTALL TEAM TO WORK WITH THE GC, NATIONAL ACCOUNT COORDINATOR, AND NIKE TEAM PRIOR TO STARTING THE INSTALLATION TO CONFIRM.
NEW CONSTRUCTION: 7AM-4PM
REMODELS: CAN BE MIXED BUT USUALLY NIGHT WORK 9PM-6AM
CAPITAL JOBS* BEFORE STORE OPENS: 7AM-9:45AM
*NIKE REQUIRES TIS TO START AT 7:00 AM AND BE OFF THE SALES FLOOR BY 9:45 AM SINCE MOST STORES OPEN AT 10:00AM. IT IS VITAL THAT TIS CLEARS THE FLOOR OF ALL HAZARDS TO NIKE STORE EMPLOYEES AND ITS CUSTOMERS. AT 9:50 AM, THE INSTALLATION TECHNICIAN SHOULD BE IN THE BACK INVENTORY ROOM AND/OR SERVICE AREA COMPLETING THE CAMERA INSTALLATIONS AND/OR INTRUSION / NVR SETUP.
IF THE INSTALLATION IN THE FRONT OF THE STORE CAN BE COMPLETED THE FIRST DAY DURING THE ALLOTTED TIME (7AM-9:50AM) AND THE REMAINDER OF THE INSTALLATION IS THE CAMERAS AND NVR IN THE BACK OF THE STORE, COMMUNICATE THIS TO THE STORE MANAGER SO HE/SHE DOES NOT HAVE TO RETURN THE FOLLOWING DAY AT 7AM.
IF A RETURN THE FOLLOWING DAY AT 7AM IS NECESSARY TO COMPLETE THE FRONT OF THE STORE (SALES FLOOR), COMMUNICATE THIS TO THE STORE MANAGER TO ENSURE SOMEONE WILL BE ON SITE THE FOLLOWING DAY TO ALLOW TIS ENTRY TO THE STORE.
IT IS VERY IMPORTANT THAT WE DO NOT INTERRUPT THE STORES OPERATION AT ANY TIME WHILE THEY ARE OPEN FOR BUSINESS.
IT IS ALSO IMPORTANT TO GET AS MUCH ACCOMPLISHED AS POSSIBLE WITHIN THE TIME FRAME ALLOTTED ON SITE.
START AND END FOR NEW STORES SHOULD FOLLOW YOUR LOCAL OFFICE HOURS.

KEEP AN OPEN LINE OF COMMUNICATION WITH THE STORE MANAGER!

LABELING OF CABLES AND PANELS

- ALL PANELS SHOULD HAVE A LABEL TO DESCRIBE ITS FUNCTION, I.E. 24VDC POWER SUPPLY FOR LOCK POWER AND AUXILIARY DEVICES.
- ALL CABLES SHOULD BE LABELED AT PANEL AND DRESSED NEATLY. I.E. FRONT LOBBY DOOR READER, FRONT LOBBY DOOR DSM, FRONT LOBBY DOOR RTE, ETC.

ADT TO UTILIZE A LABEL (NOT A SHARPIE). IF WRITTEN ON A LABEL, ALL WRITING MUST BE NEAT AND LEGIBLE.

GROUNDING

ENSURE INTRUSION PANEL IS GROUNDED TO A GOOD EARTH GROUND AT PANEL HEAD-END LOCATION. NO ELECTRICAL OR CONDUIT GROUNDS.

NIKE
NIKE FACTORY STORE

ORLANDO
NIKE FACTORY STORE

413 N Alafaya Trail
Orlando, FL 32828

0 REVISION NUMBER
PLEASE CHECK WITH THE GENERAL CONTRACTOR TO INSURE YOU HAVE THE LATEST REVISION OF THIS WORKPLAN.

PROPRIETARY INFORMATION

THIS PROPOSAL BEING SUPPLIED IS OWNED BY, AND PROPRIETARY TO, TYCO INTEGRATED SECURITY. IT IS BEING SUPPLIED UNDER EXPRESS CONDITIONS THAT:
(1) IT IS ACKNOWLEDGED THAT THE INFORMATION CONTAINS PROPRIETARY INFORMATION OF TIS, AND THEREFORE WILL BE TREATED AS CONFIDENTIAL INFORMATION AND CANNOT BE COPIED OR REPRODUCED WITHOUT THE EXPRESS WRITTEN CONSENT OF TIS;
(2) THE INFORMATION IS USED EXCLUSIVELY BY TIS PERSONNEL TO EXTRACT THE INFORMATION WHICH THEY DESIRE;
(3) THE INFORMATION SHALL NOT BE USED FOR ANY OTHER PURPOSES;
(4) THE INFORMATION SHALL NOT BE DISCLOSED TO ANY CONTRACTORS, SUPPLIERS, OR OTHER NON – TIS EMPLOYEES WITH THE EXCEPTION OF TIS, PROJECT CONSULTANTS;
(5) THE INFORMATION IS RETURNED TO TIS UPON REQUEST.

EAS SYSTEM

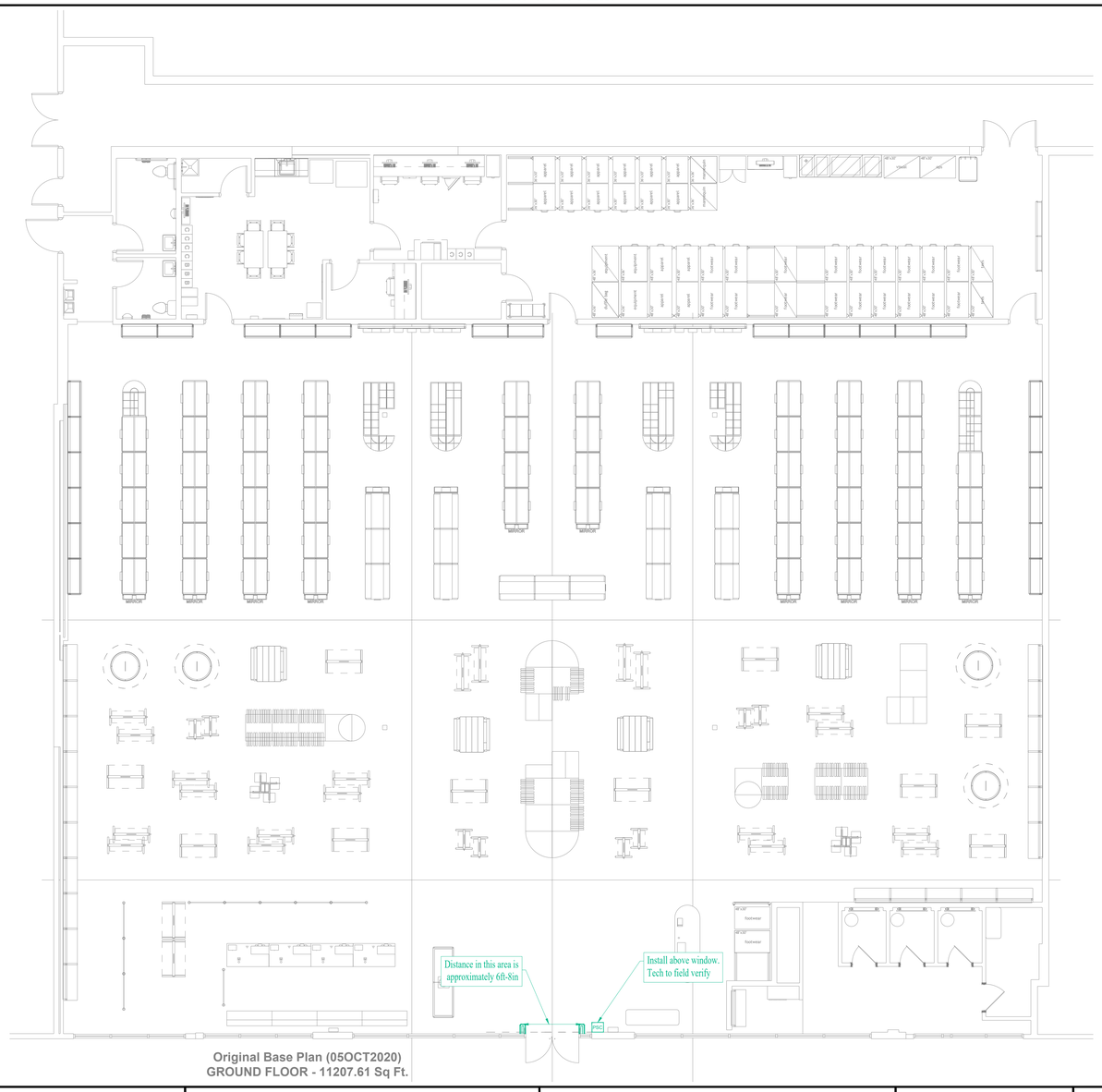

Original Base Plan (05OCT2020)
GROUND FLOOR - 11207.61 Sq Ft.

DEVICE LEGEND

NEW DEVICES ARE SHOWN IN GREEN
EXISTING DEVICES ARE SHOWN IN RED
DEVICES BEING RELOCATED ARE SHOWN IN GRAY

SYMBOL	DESCRIPTION	SITE QTY
PSC	CONTROLLER, POWER SUPPLY FOR PEDESTAL SYSTEM	1
	EAS PEDESTAL-SYNERGY	0
	EAS PEDESTAL-DOOR MAX	2

PRE-CONSTRUCTION NOTES

INITIAL MEETING WITH GENERAL CONTRACTOR

1. FIELD VERIFY IP LOCATIONS WITH GENERAL CONTRACTOR TO ENSURE PROPER PLACEMENTS.

2. DO NOT INSTALL CASH WRAP CAMERAS UNTIL CASH REGISTERS ARE INSTALLED. LEAVE WIRE COILED UP.

CONSTRUCTION NOTES

INITIAL MEETING WITH LOCAL CUSTOMER

1. FIELD VERIFY CAMERA LOCATIONS WITH LOCAL CUSTOMER TO ENSURE PROPER PLACEMENTS.

2. RUN CAT5 CABLE TO EVERY CAMERA LOCATION. THE CAT5 IS TO BE LABELED ACCORDINGLY AT BOTH ENDS, LOOPED AND NEATLY COILED ABOVE CAMERA LOCATION.

3. ALL CABLE TO BE RUN THROUGH LOW VOLTAGE RACEWAY (NIKE BUS STRUT SYSTEM). LEAVE PULL-STRINGS IN ALL J-HOOKS, BRIDAL RINGS, AND NIKE BUS STRUT.

JCI/TYCO GLOBAL CONTACTS

NATIONAL ACCOUNT MANAGER
JOSH KRIER
OFFICE NO.: 702-301-4710
CELL PHONE NO.: 702-301-4710
EMAIL: JOSH.KRIER@JCI.COM

PROGRAM MANAGER
FRANK COBURN
OFFICE NO.: 503-469-7224
CELL PHONE NO.: 503-793-5046
EMAIL: FRANK.COBURN@JCI.COM

APPLICATIONS ENGINEER
JASON LAROCHELLE
OFFICE NO.: 205-948-2845
CELL PHONE NO.: 205-213-4274
EMAIL:JASON.LAROCHELLE@JCI.COM

NASC INSTALLATION PRODECT COORDINATOR
JESSE SNYDER
OFFICE NO.:800.453.2247ext:5958
FAX NO.:317-913-7706
EMAIL: JESSE.SNYDER@JCI.COM

NATIONAL RETAIL COORDINATOR
CHARLES ROBERSON
OFFICE NO.:
CELL PHONE NO.: 561-939-3030
EMAIL:CHARLES.ROBERSON@JCI.COM

GLOBAL PROGRAM COORDINATOR
MARY BISHOP TRIPPE
OFFICE NO.: 205-943-4278
CELL PHONE NO.: 205-335-4896
EMAIL:MARY.BISHOP.TRIPPE@JCI.COM

NIKE DOMESTIC CONTACT

DOMESTIC LOSS PREVENTION ANALYST
SARAH HAMMEL
OFFICE PHONE NO.: 503-532-3950
CELL PHONE NO.: 503-819-5680
EMAIL ADDRESS: SARAH.HAMMEL@NIKE.COM

SIGN OFF SHEET

SIGN OFF SHEET INSTRUCTIONS:

Upon job completion, please completely fill out the manager sign off sheet. Then take a picture of the filled out form and email to Mary Bishop Trippe:
mary.bishop.trippe@jci.com

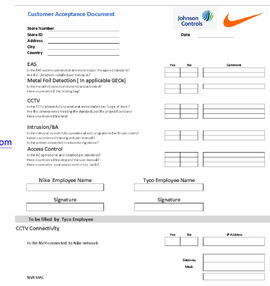
Customer Acceptance Document

Johnson Controls

Store Number
Store ID
Address
City
Country

Date

EAS
Is the EAS system operational and tested to ensure the expected results?
Are the detection heads close enough?
Metal Foil Detection(In applicable GEOs)
Is the metal foil detection and tag operational?
Have customers felt the tickling tag?

CCTV
Is the CCTV system fully commissioned and installed to the 3 Sigma of Wide?
Are the camera views meeting the standards per the project Plan?
Have customers felt being?

Intrusion/BA
Is the Intrusion/BA system fully operational and programmed with user codes?
Have customers felt being and alarmed?
Is the system connected to a monitoring station?

Access Control
Is the AC system is and installed per standard?
Are the readers and door hardware installed?
Have customers ever access and felt the card?

Yes | No | Comment

Nike Employee Name | Tyco Employee Name
Signature | Signature

To be filled by Tyco Employee

CCTV Connectivity
Is the NVR connected to Nike network
NVR MAC

Yes | No | IP Address
Gateway
Mask

#	REVISION	BY	DATE
0	ISSUED FOR CONSTRUCTION	AM/JM	05OCT2020

REVISION HISTORY

EAS SYSTEM

ORLANDO
NIKE FACTORY STORE

413 N Alafaya Trail
Orlando, FL 32828

NIKE
NIKE FACTORY STORE

This design including specifications, drawings, and design concepts is the property of Tyco Integrated Security (TIS), and is furnished on a confidential basis, with the expressed understanding that will not be sold, transferred, copied, or used to the detriment of TIS without written permission. The recipient further agrees not to disclose the contents to any other party except for the specific purpose contracted with TIS. TIS makes no representations as to the operability or accuracy of any systems, subsystems, assemblies, or other information contained herein unless specifically identified for Construction.

GCOE - BIRMINGHAM
1800 International Park Drive, Suite 500
Birmingham, AL 35243
AESBL Lic #1667

SHEET TITLE:

EAS WORKPLAN

DRAWN BY: ARUN

ENGINEERED BY: WC

SCALE: NOT TO SCALE (NTS)

SHEET #

SE-4.0

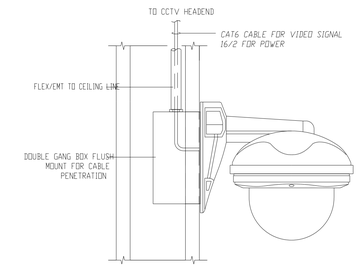

C1 SAMPLE - WALL MOUNT

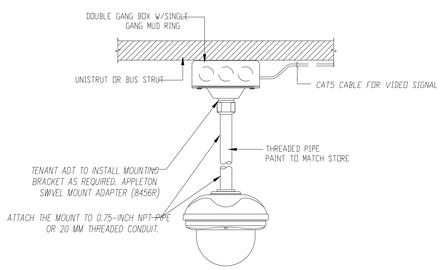

C2 SAMPLE - PENDANT MOUNT

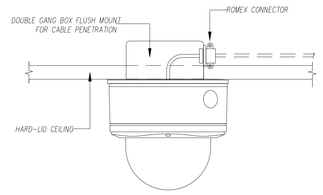

C3 SAMPLE - HARD LID SURFACE MOUNT

1. **INSTALL THE RS-232 CONNECTIONS (R MODELS ONLY). IF USING THE COMMUNICATOR WITH A 3RD PARTY DEVICE, WIRE THE CONNECTIONS AS PER THE TABLE BELOW**

TABLE 3: RS-232 CONNECTIONS

3RD PARTY DEVICE	COMMUNICATOR
TX	RX+
UNUSED	RX-
RX	TX+
UNUSED	TX-
GND	GND

THE DTE (PC) HAS THE MALE CONNECTOR (SHOWN BELOW), AND THE DCE (PERIPHERAL) HAS THE FEMALE.

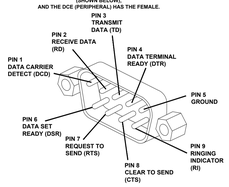

USB DEVICE
D-SUB 9 CONNECTOR PINOUT

PINOUT AND DIAGRAM OF DE9 CONNECTOR (DB9 CONNECTOR), COMMONLY USED FOR SERIAL PORTS (RS-232).

PIN	SIG.	SIGNAL NAME	DTE (PC)
1	DCD	DATA CARRIER DETECT	IN
2	RXD	RECEIVE DATA	IN
3	TXD	TRANSMIT DATA	OUT
4	DTR	DATA TERMINAL READY	OUT
5	GND	SIGNAL GROUND	-
6	DSR	DATA SET READY	IN
7	RTS	REQUEST TO SEND	OUT
8	CTS	CLEAR TO SEND	IN
9	RI	RING INDICATOR	IN

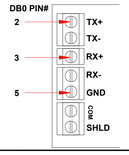

C8 3G2080 CELL TO EXACQ USB CONNECTION

C10 BUSS STRUT DIAGRAM

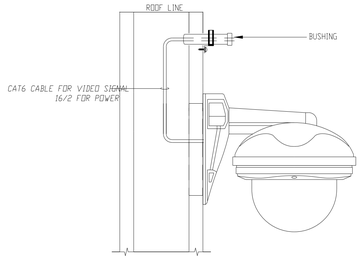

C5 SAMPLE - WALL MOUNT WITH CADDY SNAP

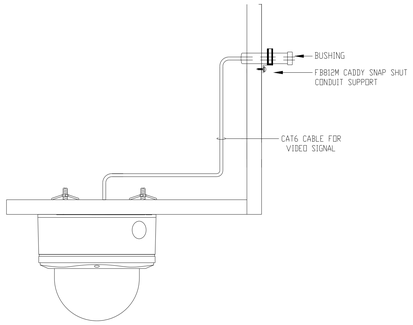

C6 SAMPLE - CEILING MOUNT WITH CADDY SNAP

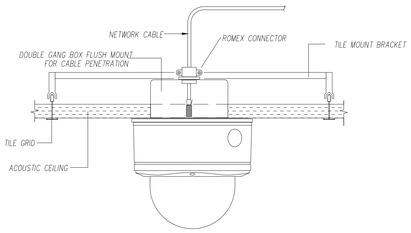

C7 ARECONT CAMERA - SOFT LID SURFACE MOUNT

C9 MPOS CAMERA VIEW

USE FOR CONNECTING THE PRO CAMERA ANALOG VIDEO OUTPUT TO A LOCAL PUBLIC VIEW MONITOR INPUT - SHIPS WITH CAMERA

C11 ILLUSTRA OUTDOOR ANALOG VIDEO OUTPUT BNC PIGTAIL

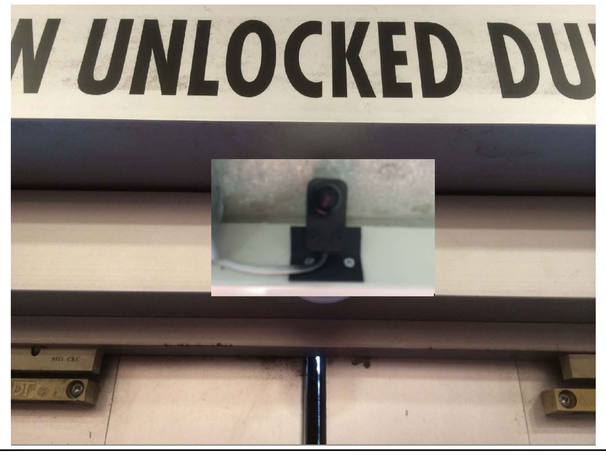

C12 FRONT DOOR EXIT CAMERA

INSTALL NOTES
PENDANT MOUNT (SEE DETAIL C2 THIS SHEET)

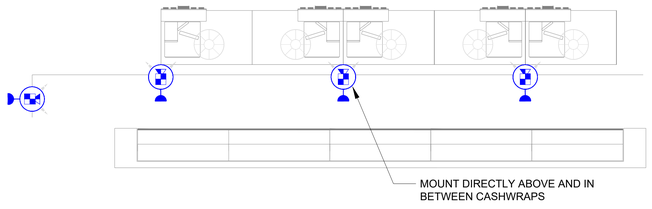

NOTE: INSTALLATION MAY DIFFER FROM WORKPLAN. GOAL IS TO VIEW BOTH CUSTOMER AND REGISTER TRANSACTIONS. SEE DETAIL D2.

C14 LINEAR CASH WRAP FOR CAMERAS

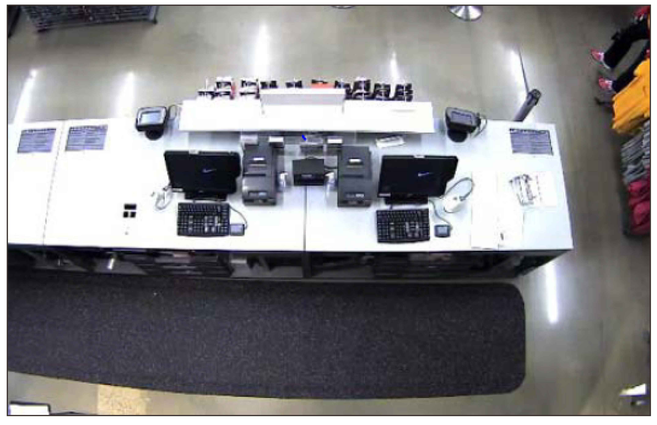

C16 LINEAR CASH WRAP PHOTO (EXAMPLE)

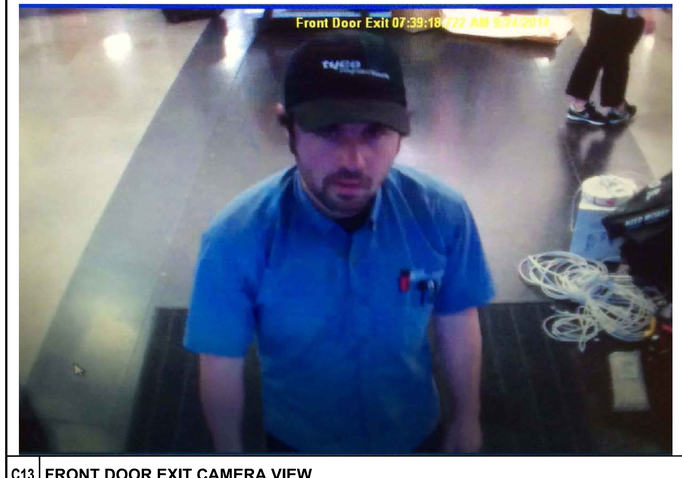

THIS IS THE VIEW THE CAMERA SHOULD HAVE WHEN INSTALLED. ANY QUESTIONS CALL FRANK COBURN 503-793-5046.

C13 FRONT DOOR EXIT CAMERA VIEW

C15 DSC TO EXACQ NVR CONNECTION

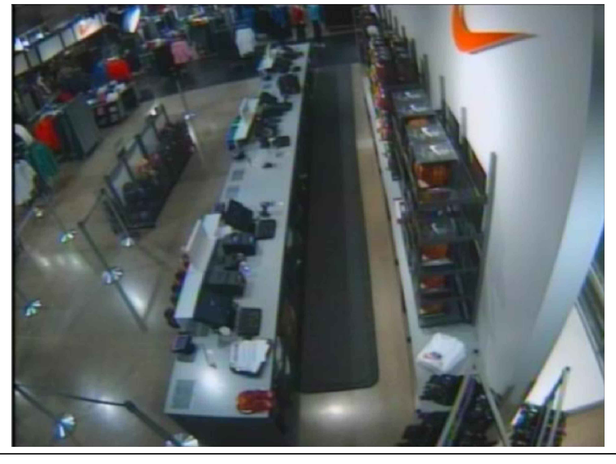

C17 LINEAR CASH WRAP FOR CAMERAS-ISLE

CCTV DETAILS

ORLANDO
NIKE FACTORY STORE

413 N Alafaya Trail
Orlando, FL 32828

NIKE
NIKE FACTORY STORE

This design including specifications, drawings, and design concepts is the property of Tyco Integrated Security (TIS), and is furnished on a confidential basis, with the expressed understanding that will not be sold, transferred, copied, or used to the detriment of TIS without written permission. The recipient further agrees not to disclose the contents to any other party except for the specific purpose contracted with TIS. TIS makes no representations as to the operability or accuracy of any systems, subsystems, assemblies, or other information contained herein unless specifically identified for Construction.

GCOE - BIRMINGHAM
1800 International Park Drive, Suite 500
Birmingham, AL 35243
AESBL Lic #1667

SHEET TITLE:

CAMERA DETAILS

DRAWN BY: WRC
ENGINEERED BY: WM
SCALE: Not To Scale (NTS)
SHEET #

SE-D.1

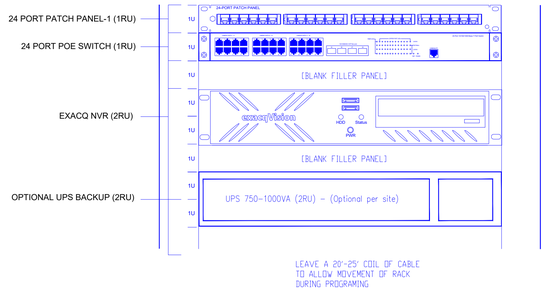

TYPICAL 19" RACK (6-8 RU NEEDED)

D1 NETWORK RACK TYPICAL - MDF - UP TO 24 CONNECTIONS

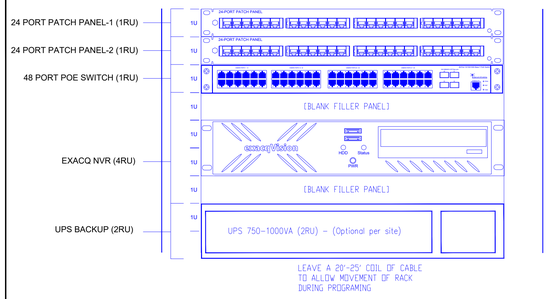

TYPICAL 19" RACK (9 RU NEEDED)

D2 NETWORK RACK TYPICAL - MDF - UP TO 48 CONNECTIONS

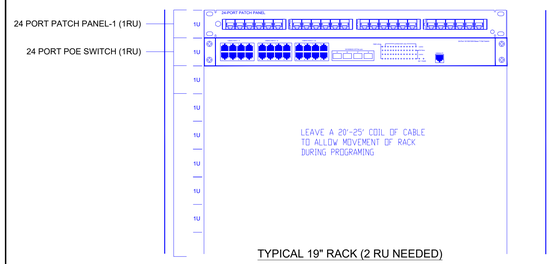

TYPICAL 19" RACK (2 RU NEEDED)

D3 NETWORK RACK TYPICAL - REMOTE IDF - UP TO 24 CONNECTIONS

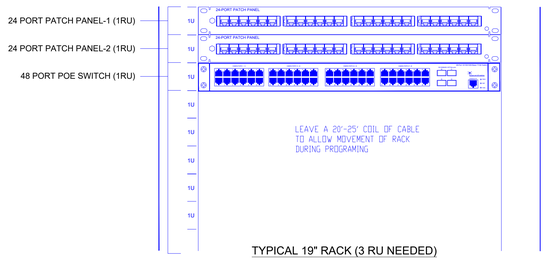

TYPICAL 19" RACK (3 RU NEEDED)

D4 NETWORK RACK TYPICAL - REMOTE IDF - UP TO 48 CONNECTIONS

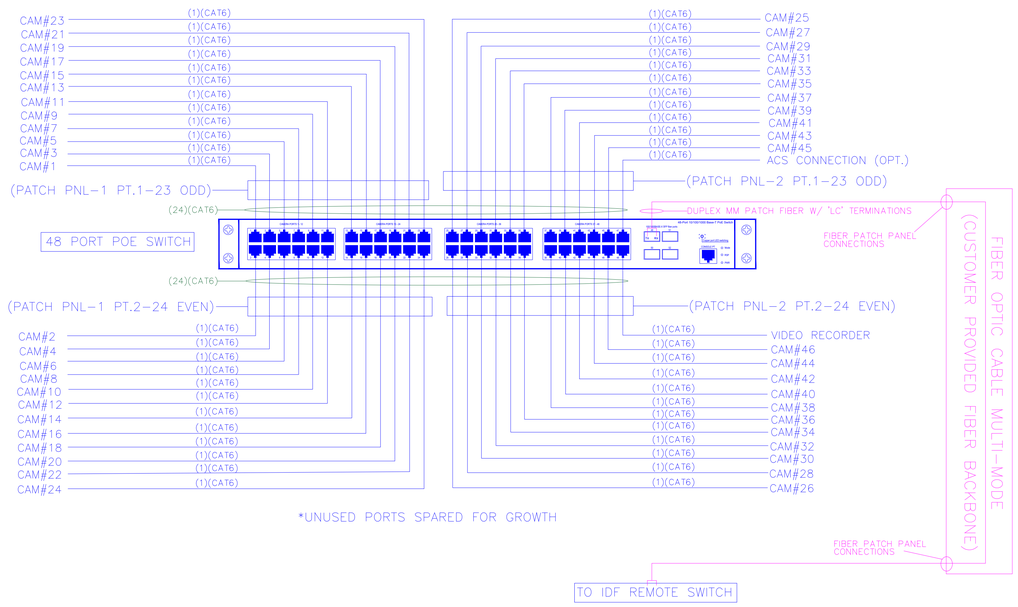

D5 CCTV TYPICAL POE NETWORK SWITCH AND PATCH PANEL PORT TERMINATIONS - 25-48 ASSIGNMENTS

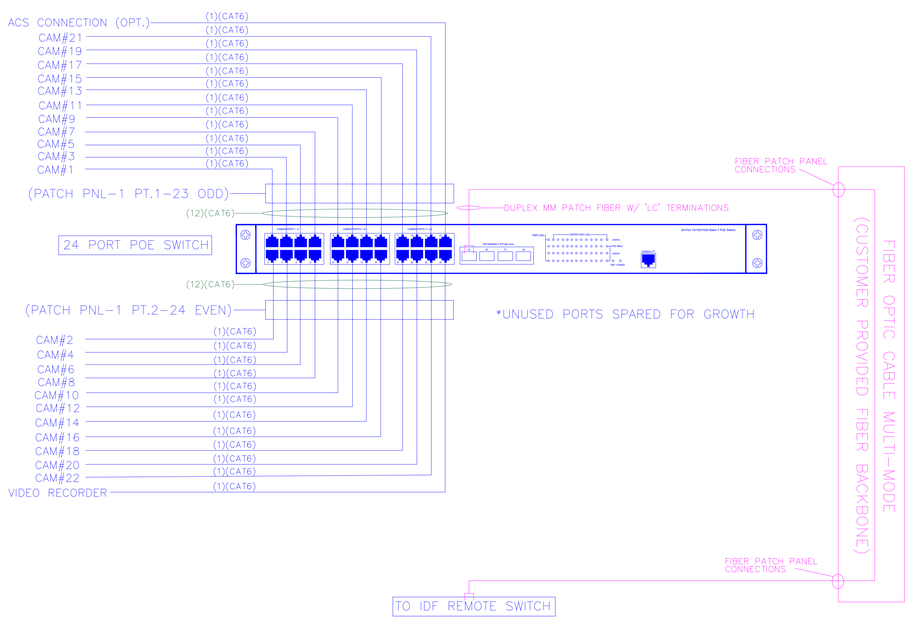

D6 CCTV TYPICAL POE NETWORK SWITCH AND PATCH PANEL PORT TERMINATIONS - UP TO 24 ASSIGNMENTS

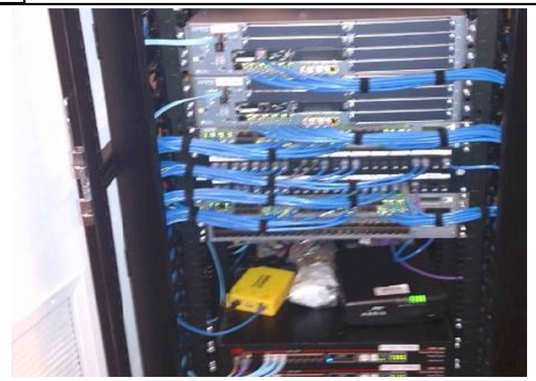

D7 NETWORK CABINET PATCH CABLE ROUTING - SAMPLE PICTURE

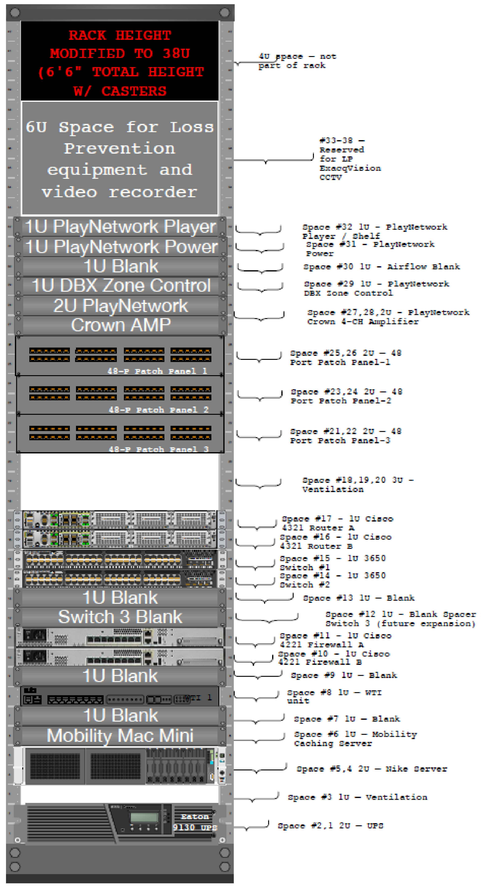

D8 NIKE A1NV2 STACK REV 11.0.0 - REFERENCE ONLY

CCTV INSTALLATION DETAILS

ORLANDO
NIKE FACTORY STORE

413 N Alafaya Trail
Orlando, FL 32828

NIKE FACTORY STORE

This design including specifications, drawings, and design concepts is the property of Tyco Integrated Security (TIS), and is furnished on a confidential basis, with the expressed understanding that will not be sold, transferred, copied, or used to the detriment of TIS without written permission. The recipient further agrees not to disclose the contents to any other party except for the specific purpose contracted with TIS. TIS makes no representations as to the operability or accuracy of any systems, subsystems, assemblies, or other information contained herein unless specifically identified for Construction.

GCOE - BIRMINGHAM
1800 International Park Drive, Suite 500
Birmingham, AL 35243
AESBL Lic #1667

SHEET TITLE:

INSTALLATION DETAILS

DRAWN BY: WRC
ENGINEERED BY: WM
SCALE: NOT TO SCALE (NTS)
SHEET #

SE-D.2

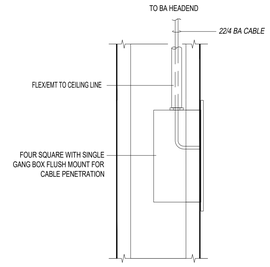

B1 MOTION - WALL MOUNT

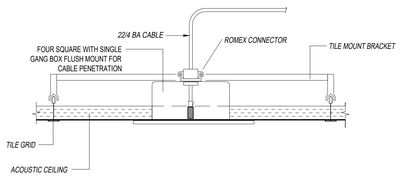

B2 360° MOTION - CEILING TILE MOUNT

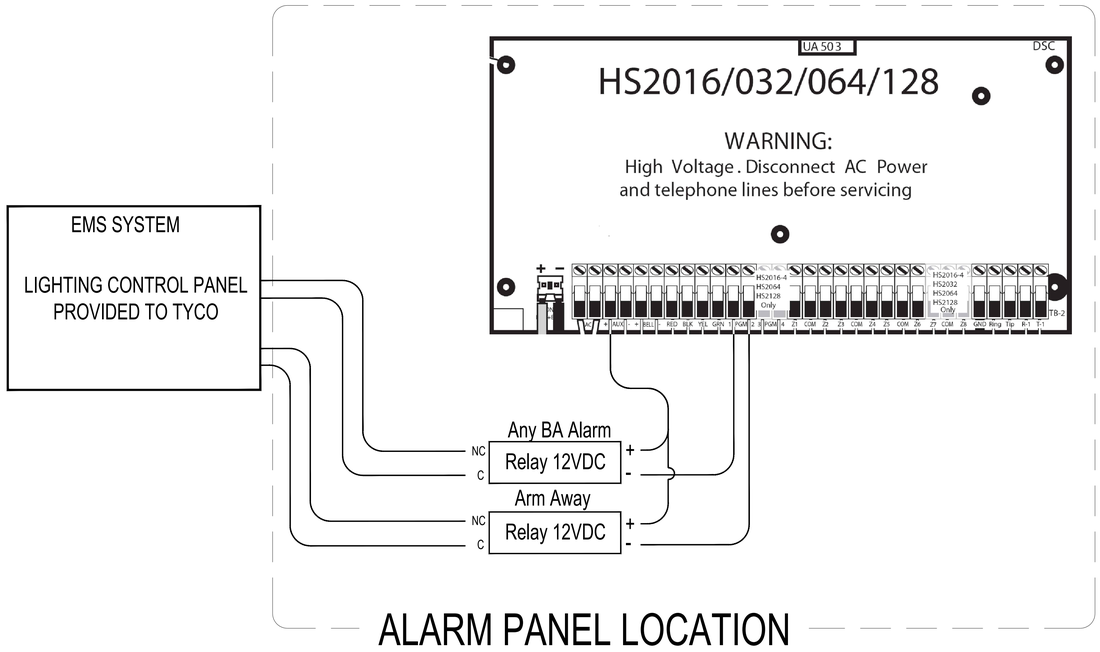

B3 DSC WIRING DIAGRAM

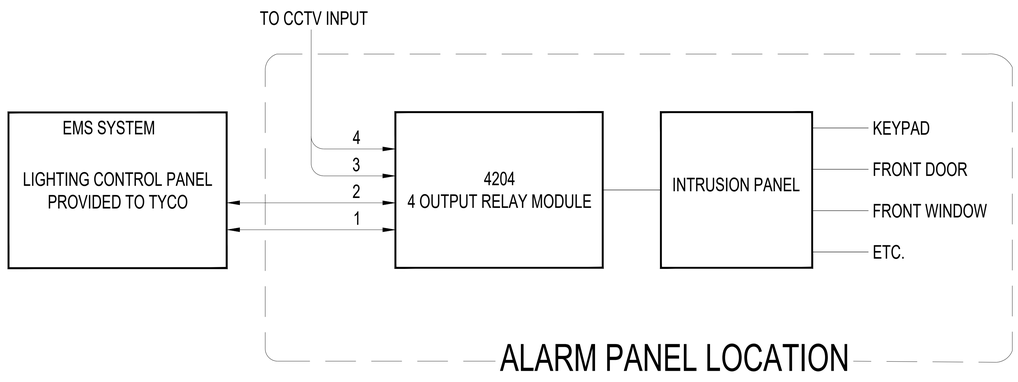

B4 VISTA-128 WIRING DIAGRAM

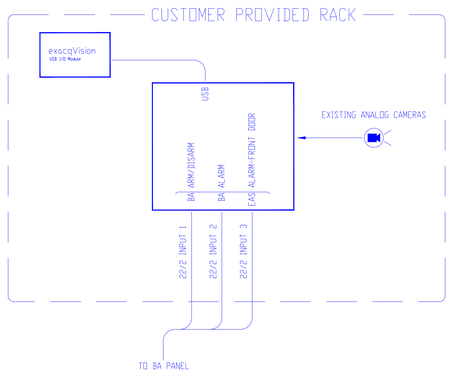

B5 TYPICAL REPRESENTATIVE INTRUSION BLOCK DIAGRAM

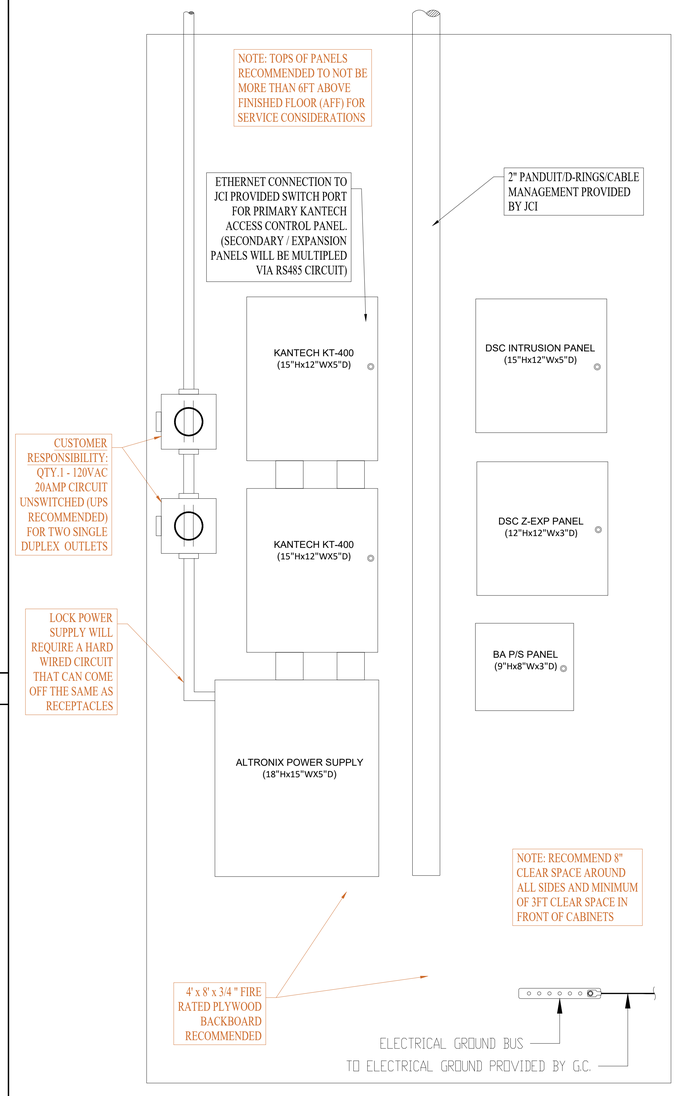

B6 TYPICAL HEAD END ELEVATION PLAN (REFERENCE ONLY)

Back tamper

Tech Tip: Do not use large head screws that might short out the back of the contact; or cause the PCB board not to sit properly into the back plate.

Tech Tip: Mount the contact with a minimum of two screws, plus the tamper breakout area if desired.

To monitor the back tamper you must secure the tamper breakout area with a screw as well.

DO NOT SECURE JUST THE TAMPER BREAKOUT AREA.

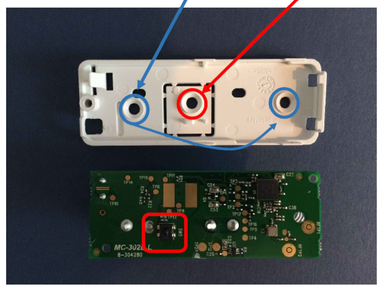

Cover Tamper

Tech Tip: DO NOT PRESS THE TAMPER BOOT ON TOO TIGHT.

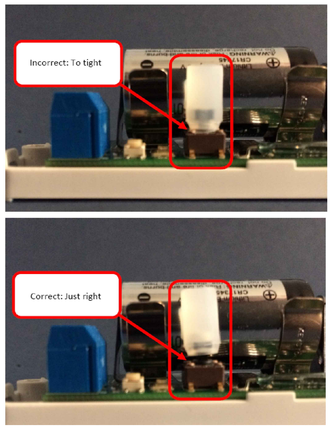

Surface Mount Wire Runs

Tech Tip: Cutout the cover plastic to accommodate the surface mount wiring into the contact.

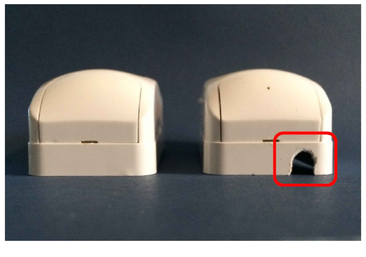

Tech Tip: Make sure the wire is not pinched or prevent the cover from being completely closed.

B7 NEO PG9945 TAMPER

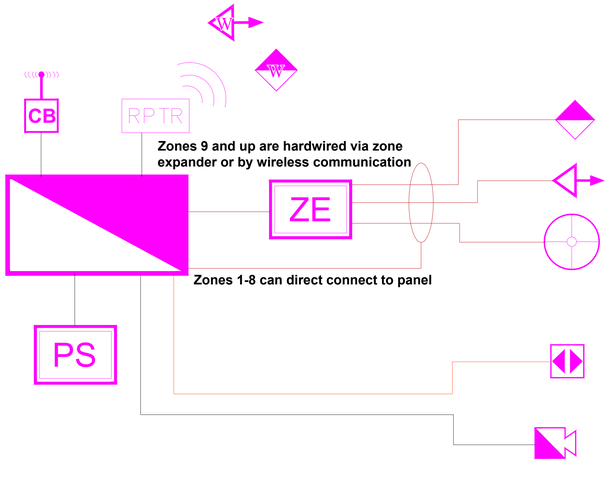

B8 TYPICAL INTRUSION BLOCK DIAGRAM (REFERENCE ONLY)

BA DETAILS

ORLANDO
NIKE FACTORY STORE

413 N Alafaya Trail
Orlando, FL 32828

NIKE
NIKE FACTORY STORE

This design including specifications, drawings, and design concepts is the property of Tyco Integrated Security (TIS), and is furnished on a confidential basis, with the expressed understanding that will not be sold, transferred, copied, or used to the detriment of TIS without written permission. The recipient further agrees not to disclose the contents to any other party except for the specific purpose contracted with TIS. TIS makes no representations as to the operability or accuracy of any systems, subsystems, assemblies, or other information contained herein unless specifically identified for Construction.

GCOE - BIRMINGHAM
1800 International Park Drive, Suite 500
Birmingham, AL 35243
AESBL Lic #1667

SHEET TITLE:

BA DETAILS

DRAWN BY: CK/AR

ENGINEERED BY: ULAGANATHAN

SCALE: Not To Scale (NTS)

SHEET #

SE-D.3

Mechanical

Height 183.9cm (72.4in)
Width 24.0cm (9.4in)
Depth.....4.4cm (1.7in)
Weight .....11.6kg (25.5 lbs.)

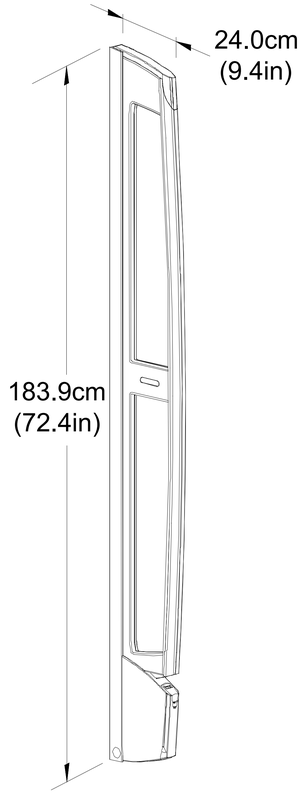

C1 AMS-DOOR-MAX

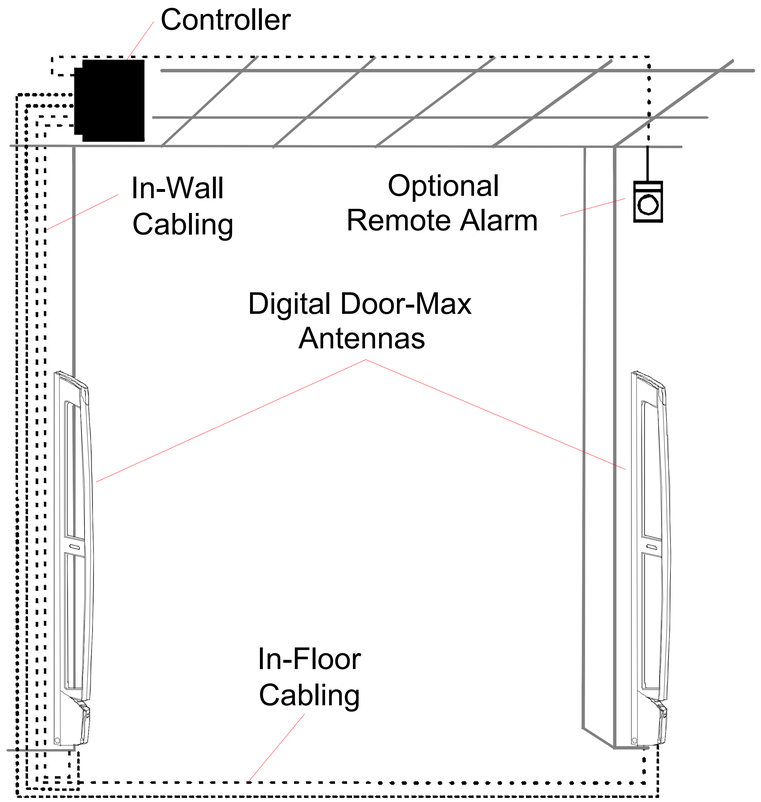

C2 AMS-DOOR-MAX WIRING DIAGRAM

Electrical Specifications
Hardwired or outlet for controllers , pedestals with onboard electronics must be:

- 2 wire and ground
- Must comply with all local & national electrical and fire codes
- 24 hour un-switched
- Less than .5V from neutral to ground
- No UPS devices

C3 ELECTRICAL SPECIFICATIONS

! WARNING! Table 1 lists surfaces approved for mounting. The antenna may detach from other surfaces resulting in damage to product and property, and possible injury.

Table 1. Mounting hardware

Mounting Surface	Hardware
Metal Frames	Self-tapping M4 (#8) screw, hex head, 19mm (3/4in) long or adhesive tape pre-mounted on mounting channel.
Dry wall	50 lb E-Z Ancor® with M4 (#8) Phillips head or self-tapping, hex head screw, 25mm (1in) long.
Steel framed dry wall	Self-tapping M4 (# 8) screw, hex head, 38mm (1-1/2in) long or adhesive tape pre-mounted on mounting channel.
Wood frame	Drywall M4 (#8) screw, 38mm (1-1/2in) long.
Cement	Tapcon® screw, 3/16 diameter, 32mm (1-1/4in) long.
Glass	Adhesive tape pre-mounted on mounting channel.

C4 APPROVED MOUNTING SURFACES

To avoid damaging the mounting surface of a Digital Door-Max antenna installed using adhesive tape, remove its mounting channel using a tape cutter. To do this, construct a tape cutter using:

- 1m (3ft) of thin metal wire. You can use stainless steel fishing leader at least 0.3mm (.012in) in diameter.
- Two wire sleeves.
- Two handles for wire such as brass accessory links.

You will also need:

- Lubricant such as lithium grease or WD-40®
- Stiff, blunt, plastic scraper.

Procedure

1. Remove the antenna from the mounting channel by lifting the antenna up and out.
2. Make a tape cutter using the wire, handles, and sleeves (Figure 14).
   a. Wrap wire around the handles.
   b. Thread wire through wire sleeves and squeeze with pliers to secure wires.

Figure 14. Parts of a tape cutter

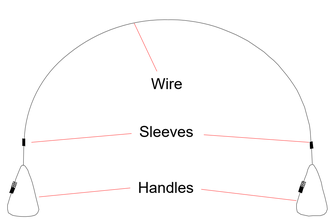

3. Detach the mounting channel by placing the wire of the tape cutter behind the mounting channel and sawing back and forth (Figure 15).

Figure 15. Using the tape cutter to detach the mounting channel

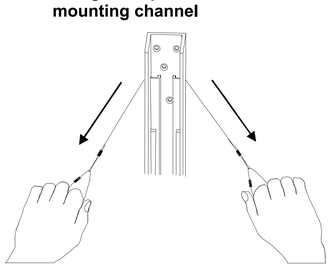

4. Remove remaining tape affixed to the wall by spraying lubricant on the tape and scraping it off.

C5 REMOVING TAPED ANTENNAS

DoorMax Glass Mounting Kit ZPDDM-G1

Adhesion promoter solution	2	1600-0206-01
Decorative strip	1	0500-9898-01
Dry towels	2	1600-0207-01

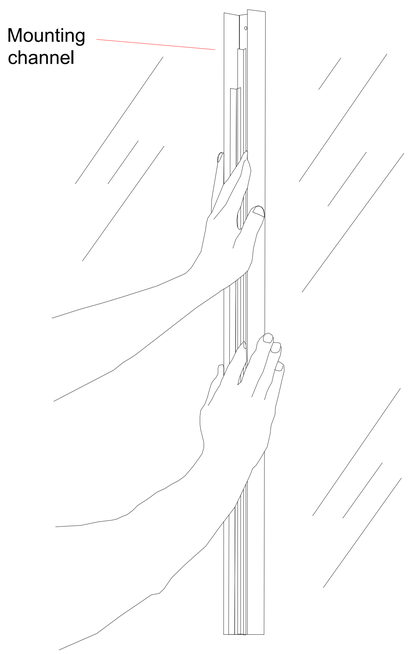

1. Spray the other side of the glass opposite the antenna mounting channel with adhesion promoter solution and wipe the glass dry with the other dry towel.
2. Apply the decorative strip to the outside of the glass to hide the back of the mounting channel.
3. Wait two hours before attaching antennas to mounting channels.
4. Decide the attachment method for the mounting channel.
   - **Adhesive tape**. The mounting channel comes with adhesive tape installed along its back surface. The tape is used for glass, aluminum, steel, or painted steel surfaces; however, the channel must be flush against the mounting surface with no gaps between the two. If gaps occur, use screws instead.
   - **Screws.** Ensure the wall or doorframe is strong enough to support the antenna.

! CAUTION! When orienting the mounting channels, ensure knockouts in mounting channels are on the bottom (Figure 3).

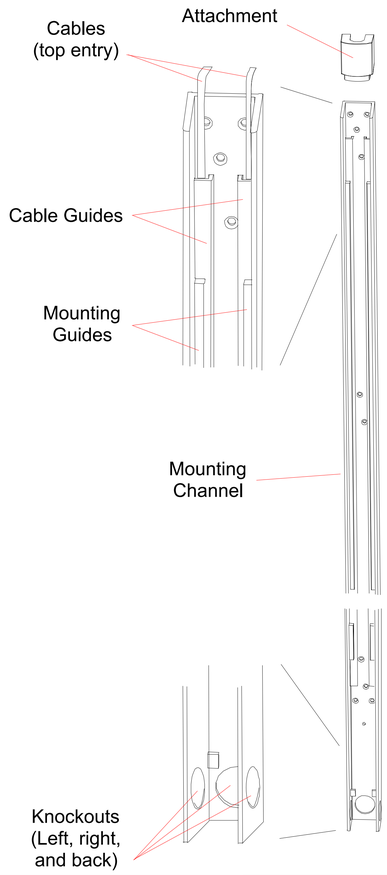

C6 GLASS MOUNTING KIT

EAS DETAILS

CITY,
COUNTRY

NIKE
NIKE FACTORY STORE

This design including specifications, drawings, and design concepts is the property of Tyco Integrated Security (TIS), and is furnished on a confidential basis, with the expressed understanding that will not be sold, transferred, copied, or used to the detriment of TIS without written permission. The recipient further agrees not to disclose the contents to any other party except for the specific purpose contracted with TIS. TIS makes no representations as to the operability or accuracy of any systems, subsystems, assemblies, or other information contained herein unless specifically identified for Construction.

GCOE - BIRMINGHAM
1800 International Park Drive, Suite 500
Birmingham, AL 35243
AESBL Lic #16667

SHEET TITLE:

EAS-DOOR-MAX

DRAWN BY: BJD
ENGINEERED BY: JMG
SCALE: NTS
SHEET #

SE-D.4